E74215

AS-Interface flat cable

Flat cable 100 meter TPE bk

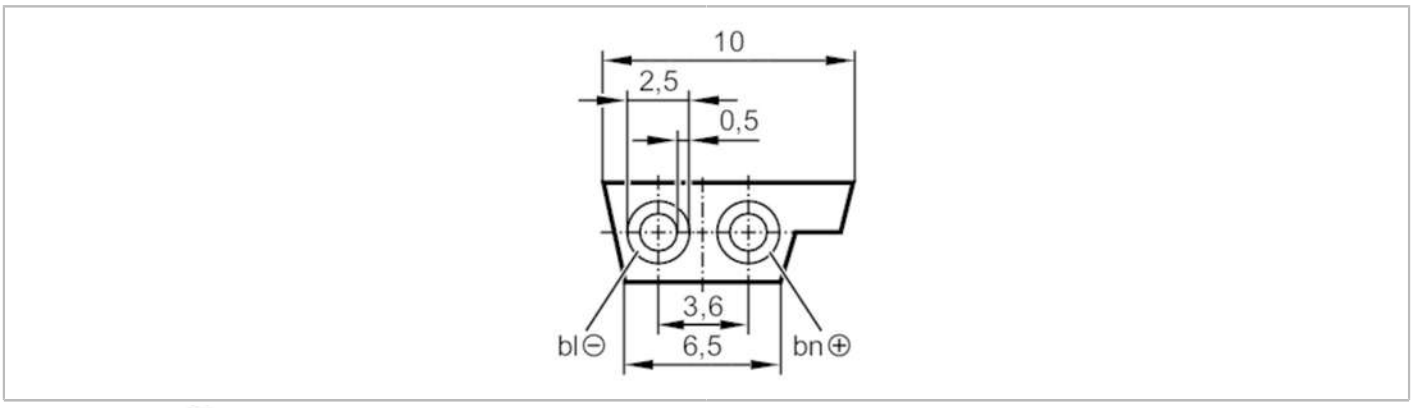

Application		
Design		for use of insulation displacement technology
Application		external 24 V power supply
Electrical data		
Operating voltage	[V]	24 DC; (Peak voltage 300 V)
Operating conditions		
Ambient temperature	[°C]	-40...105
Mechanical data		
Weight	[g]	8021
Remarks		
Remarks		100 m supplied on a cable drum
Pack quantity		1 pcs.
Electrical connection		
Cable: 100 m, TPE, black; 2 x 1.5 mm²		