E43316

T-piece

T-PIPE/G1/2/L100/DN25

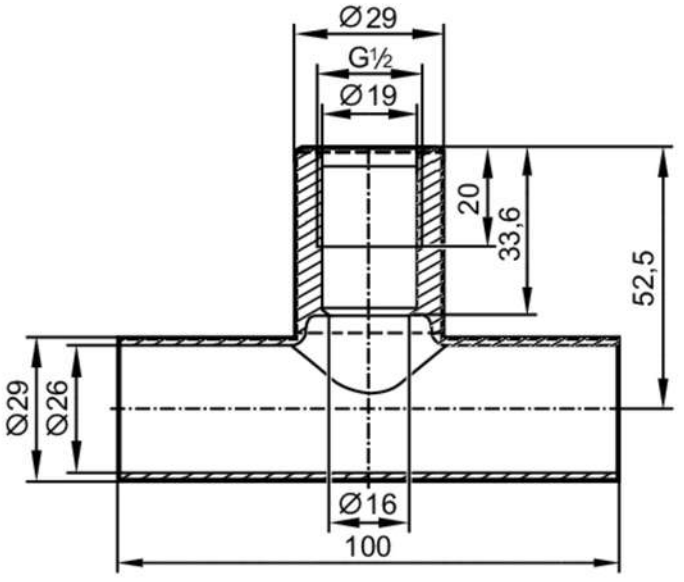

EC 1935/2004 EHEDG Tested FCM

Application		
Design		for sensors and adapters with process connection G ½ A
Pressure rating	[bar]	40
Tests / approvals		
Pressure Equipment Directive		A possible classification to PED depends on the application and has to be carried out by the user / operator.
Pressure Equipment Directive EAC		The adapter is intended for use in devices, machines and installations that do not fall under the categories of the technical rule TR CU 032/2013.
Safety instructions		The compatibility between medium and product material has to be checked in all applications.
Mechanical data		
Weight	[g]	327
Materials		stainless steel (1.4404 / 316L)
Sensor connection		G 1/2 sealing cone
Process connection		welding adapter Ø 29 mm
Surface characteristics Ra/Rz of the wetted parts		0.8 / 4
Accessories		
Items supplied		O-ring: 1, FKM
Remarks		
Pack quantity		1 pcs.