MAIN CATALOG

Safety Products

ABB Jokab Safety




ABB

Safety products catalog

ABB Jokab Safety



INTRODUCTION 1

SAFETY CONTROLLERS 2

OPTICAL SAFETY DEVICES 3

SENSORS AND LOCKS 4

CONTROL DEVICES 5

EMERGENCY STOPS AND PILOT DEVICES 6

PRESSURE SENSITIVE DEVICES 7

CONTACTORS AND MOTOR STARTERS 8

Introduction

1–**2** **Introduction**

1–**6** **Standards and regulations**

Introduction
Company overview

ABB Jokab Safety has been helping machine builders to create production-friendly and safe work environments for operators since 1988.



We develop products and solutions for machine safety
We make it simple to build safety systems. Developing products and solutions for machine safety has been our business idea since the company Jokab Safety, now a part of ABB, was founded in Sweden in 1988.

Many industries around the world have discovered how much easier it has become to build protection and safety systems with our components and guidance. Our extensive program of products, safety solutions and our long experience in machine safety makes us a safe partner.

Together we create a safe world!

Introduction

Company overview

Products and systems

We deliver machine safety solutions for single machines or entire production lines. Our long experience of helping customers making solutions for demanding environments has made us experts in combining production demands with safety demands for production-friendly solutions.

We market a wide range of safety products, which makes it easy to build safety systems. We develop these intelligent products continuously, in cooperation with our customers.

Our experience of safety requirements and standards

Directives and standards are very important to machine builders and safety component manufacturers. We represent Sweden in several international committees that develop standards, for e.g. industrial robots, safety distances and control system safety features. We work daily with the practical application of safety requirements in combination with production requirements. We are happy to share our knowledge of standards with our customers. You can use our experience for training and advice.

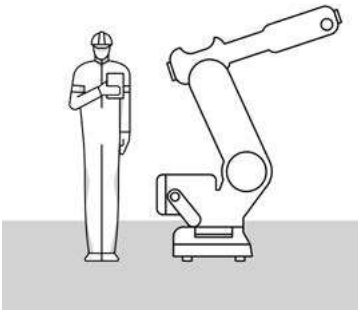

Markets and industries

Solutions from ABB Jokab Safety can be found in all types of industries across the globe. But we pride ourselves in having products and solutions that are especially well suited for e.g.:

- Robotics
- Food and beverage
- General machinery (OEM)



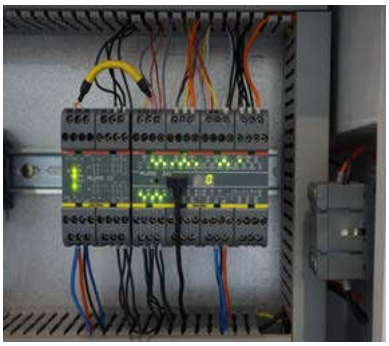



Our range of safety products

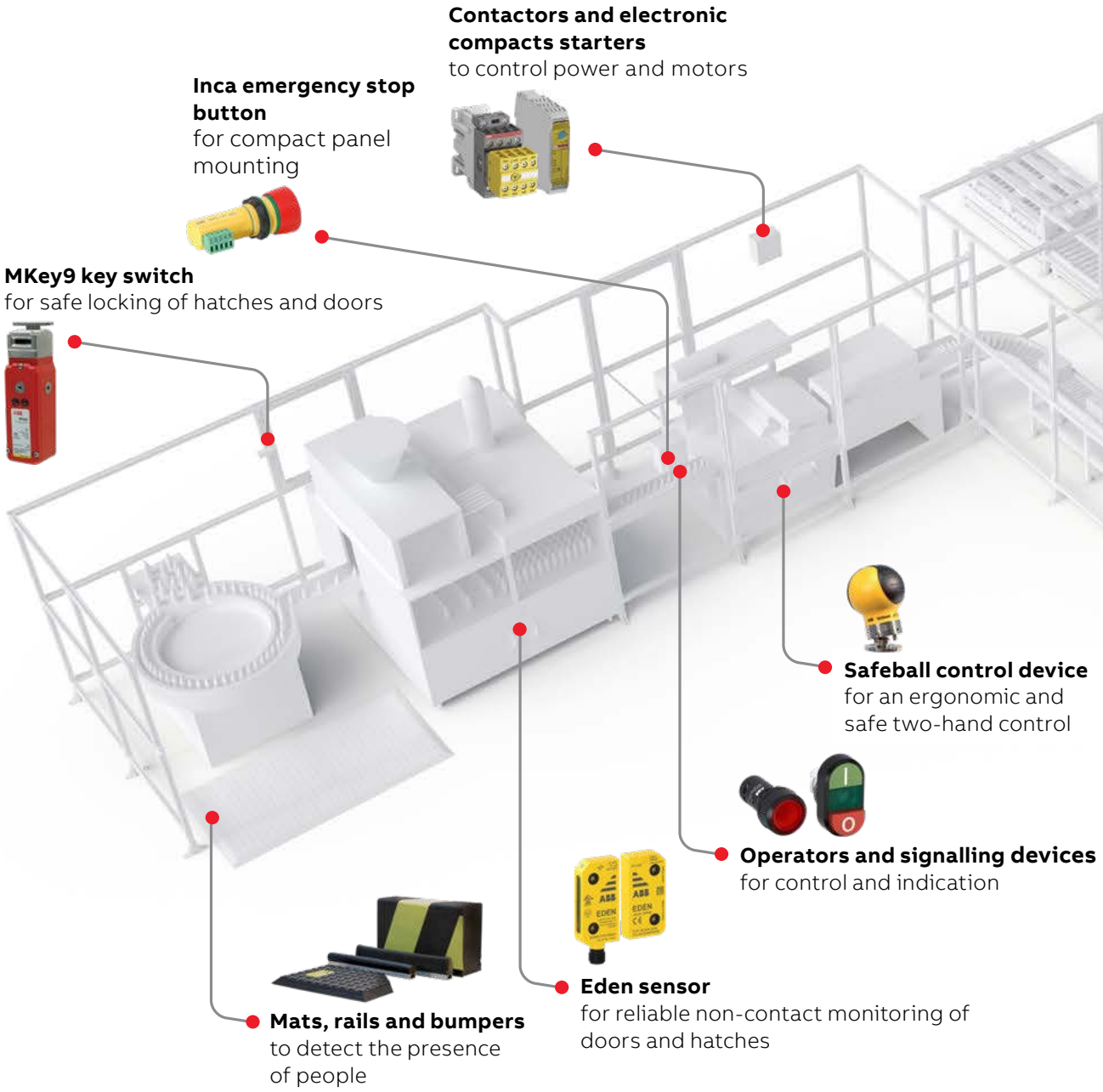

ABB is the only supplier that can deliver complete safety solutions (including output devices such as contactors and frequency converters) together with automation solutions such as robotics, motors, drives and PLCs.

Magne magnetic lock
to keep doors and hatches locked during a process



Pluto programmable safety controller, Vital safety controller and Sentry safety relays
for flexible monitoring of safety devices

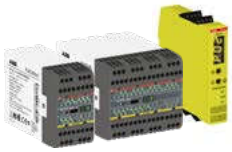

Smile emergency stop button
to safely stop machinery in hazardous situations



Orion light guards
for a production friendly safety detection







GKey safety lock
for safe locking of doors

JSHD4 three-position device
for safe and ergonomic inspection and troubleshooting



LineStrong pull wire emergency stop switch
for easy access of emergency stop function

European Directives and Standards

Directives and standards are of great importance for manufacturers of machines and safety components. In the European Union, the EU Directives gives requirements for the minimum level of health and safety, and these are mandatory for manufacturers to fulfill. In every member country the Directives are implemented in national legislation.

Machines which have been placed on the market since 2010, must comply with the new Machinery Directive 2006/42/EC. Before that, the old Machinery Directive 98/37/EC was valid.

Although the requirements in the Directives are specific for Europe, they also apply to machines that are imported to Europe. And the Directives are supported by standards, of which many also are valid internationally.

The objectives of the Machinery Directive, 2006/42/EC, are to maintain, increase and equalise the safety level of machines within the members of the European Community. Based on this, the free movement of machines/products between the countries in this market can be achieved. The Machinery Directive is developed according to "The New Approach" which is based on the following principles:

- The directives give the basic health and safety requirements, which are mandatory.
- Detailed solutions and technical specifications are found in harmonised standards.
- Standards are voluntary to apply, but products designed according to the harmonised standards will fulfill the basic safety requirements in the Machinery Directive.

Harmonised standards
Harmonised standards give support on how to fulfill the requirements of the Machinery Directive. The relationship between the Machinery Directive and the harmonised standards is illustrated by the diagram below.

Within ISO (The International Organization for Standardization) work is also going on in order to harmonise the safety standards globally in parallel with the European standardisation work.

ABB Jokab Safety takes an active part in the working groups both for the ISO and EN standards.

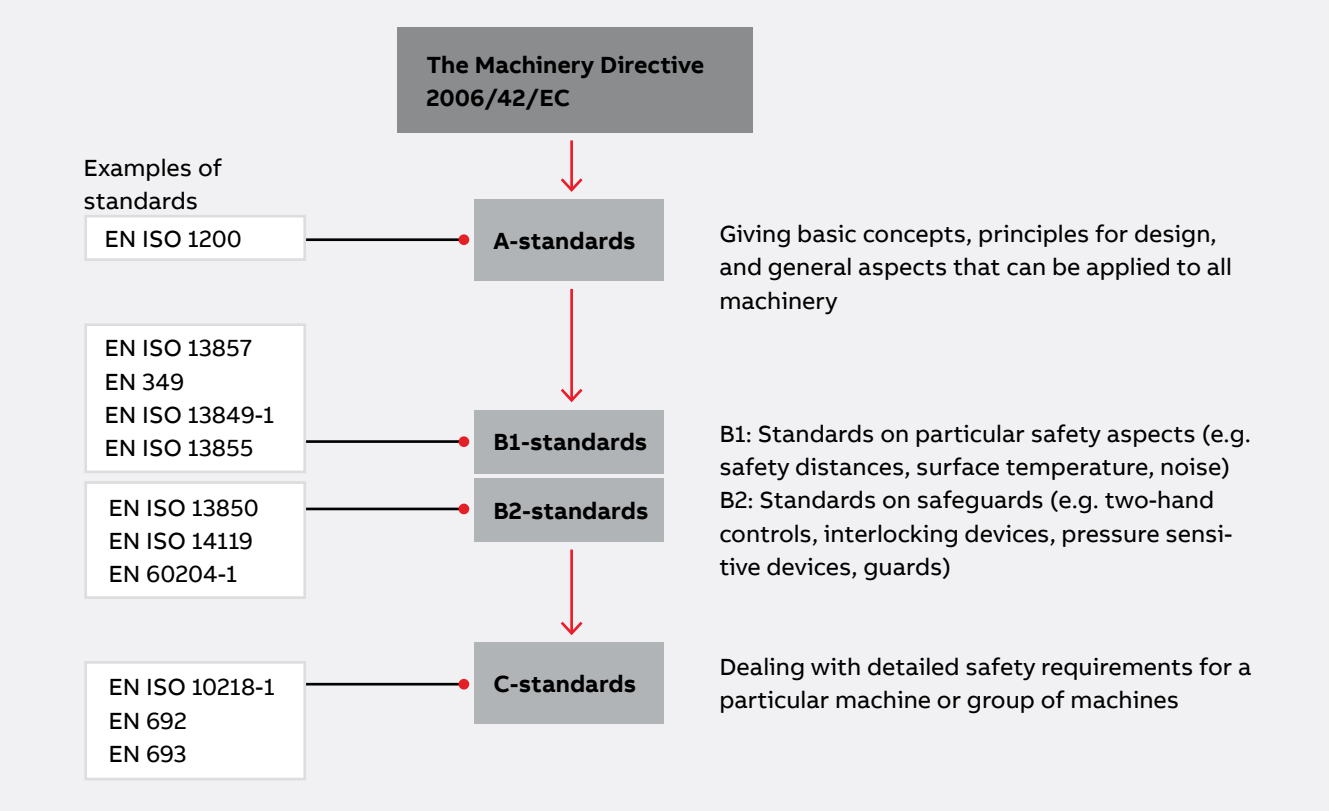

Machinery Directive

The Machinery Directive, for machines and safety components

From 2006/42/EC

1 § This Directive applies to the following products:

a) machinery;
b) interchangeable equipment;
c) safety components;
d) lifting accessories;
e) chains, ropes and webbing;
f) removable mechanical transmission devices;
g) partly completed machinery.

The Machinery Directive gives a detailed definition of a machine, which can be simplified as something that has linked parts that are moving, where the energy source is not human effort. Two or more machines that are put together into a production line is also regarded as one machine.

CE-marking and Declaration of conformity

Machines manufactured or placed on the market from december 29, 2009, shall be CE-marked and fulfil the requirements according to the European Machinery Directive 2006/42/EC. This is also valid for old machines (manufactured before 1 January 1995) if they are manufactured in a country outside the EEA and imported to be used in a country in the EEA (European Economic Area).

For machines manufactured and/or released to the market between january 1, 1995, and december 28, 2009, the old Machinery Directive (98/37/EC) is valid.

NOTE!

Machines have to be accompanied by a Declaration of Conformity (according to 2006/42/EC, Annex II 1.A) that states which directive and standards the machine fulfills. It also shows if the product has gone through EC Type Examination.

Safety components have to be accompanied with a Declaration of Conformity.

CE

Requirements for the use of machinery

For a machine to be safe it is not enough that the manufacturer has been fulfilling all valid/necessary requirements. The user of the machine also has requirements to fulfill. For the use of machinery there is a Directive 2009/104/EC.

It requires that the work equipment that is provided to workers must comply with relevant Community directives.

This means that when repair/changes are made on the machine it shall still fulfill the requirements of the Machinery Directive. This doesn't have to mean that a new CE-marking is required (unless the changes are extensive).

NOTE!

This means that the buyer of a machine also has to make sure that a new machine fulfills the requirements in the directives. If the machine does not fulfill the requirements the buyer is not allowed to use it.

"Old" machines

For machines delivered or manufactured in the EEA before 1 January 1995 the following is valid.

From 2009/104/EC

b) work equipment which, if already provided to workers in the undertaking or establishment by 31 December 1992, complies with the minimum requirements laid down in Annex I no later than 4 years after that date;

c) without prejudice to point (a)(i), and by way of derogation from point (a)(ii) and point (b), specific work equipment subject to the requirements of point 3 of Annex I, which, if already provided to workers in the undertaking or establishment by 5 December 1998, complies with the minimum requirements laid down in Annex I, no later than 4 years after that date.

Annex I contains minimum requirements for health and safety. There can also be additional national specific requirements for certain machines.

NOTE!

The point in time when the Machinery Directive was implemented in each Member Country varies. Therefore it is necessary to check with the national authorities in ones own country, to find out what is considered as "old" and respectively "new" machines.

Risk assessment

an important tool both when constructing a new machine and when assessing risks on older machines

"Old" machines

Machinery that is placed on the market or put into service before 1995 in the EEA.

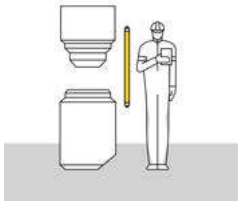

Use of work equipment
2009/104/EC

Possible national legislation on specific machines

"New" machines

1. Machinery that is placed on the market or put into service from 1995 in the EEA.
2. All machinery that are imported to the EEA irrespective of date of origin.

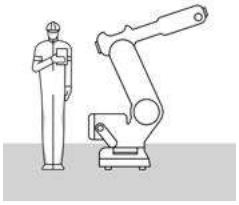

Use of work equipment
2009/104/EC
Note!
Not Annex 1 - instead use applicable directives.

The Machinery Directive
98/37/EC (1995 - 2009)
2006/42/EC (from 2010)

CE-marking + Declaration of conformity

EMC Directive
2014/30/EU

Low Voltage Directive
2014/35/EU

Possible more directives

Risk assessment
A well thought-out risk assessment supports manufacturers/users of machines to develop production friendly safety solutions. One result of this is that the safety components will not be a hindrance. This minimizes the risk of the safety system being defeated.

New machines
The following requirement is given by the Machinery Directive

From 2006/42/EC
The manufacturer of machinery or his authorised representative must ensure that a risk assessment is carried out in order to determine the health and safety requirements which apply to the machinery. The machinery must then be designed and constructed taking into account the results of the risk assessment.

The standard EN ISO 12100 gives guidance on the information required to allow risk assessment to be carried out.The standard does not point out a specific method to be used. It is the responsibility of the manufacturer to select a suitable method.

Machines in use
A risk assessment must have been carried out on all machines that are in use; CE-marked as well as not CE-marked. A risk assessment must also be performed when making changes on a machine, to determine if the safety measures needs to be adapted.

Documentation of risk assessment
The risk assessment shall be documented. The risk assessment should take into consideration the severity of the potential injuries as well as the probability that they occur.

Protection or warning?
How is it possible to choose safety measures that are production friendly and in every way well balanced? The Machinery Directive gives an order of priority for the choice of appropriate methods to remove the risks. Here it is further developed in a five step method.

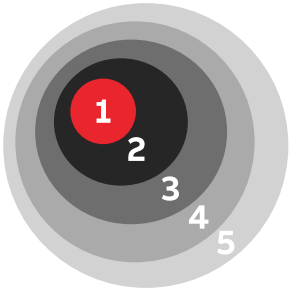

Prioritize safety measures according to the 5-step-method
1. Eliminate or reduce risks by design and construction
2. Move the work tasks outside the risk area
3. Use guards/safety devices
4. Develop safe working routines/information/education
5. Use warnings as pictograms, light, sound etc.

The further away from the center of the circle, the greater responsibility for the safety is placed onto the user of the machine. If full protection is not effectively achieved in one step, one has to go to the next step and find complementary measures.
What is possible is dependant on the need for accessibility, the severity of the risk, appropiate safety measures etc.

Example on prioritizing according to the 5-step-method

Priority	Example of hazard and safety measure taken	
1. Make machine safe by design and construction	Hazard: Safety measure:	Cuts and wounds from sharp edges and corners on machinery Round off sharp edges and corners.
2. Move the work tasks outside the risk area	Hazard: Safety measure:	Crushing of fingers from machine movements during inspection of the production inside the risk area Installation of a camera.
3. Use guard/safety devices	Hazard: Safety measure:	Crushing injuries because of unintended start during loading of work pieces in a mechanical press Install a light curtain to detect operator and provide safe stop of the machinery.
4. Safe working routines/ information	Hazard: Safety measure:	Crushing injuries because the machine can tip during installation and normal use. Make instructions on how the machine is to be installed to avoid the risks. This can include requirements on the type of fastening, ground, screw retention etc.
5. Warning	Hazard: Safety measure:	Burns because of hot surfaces in reach Warning signs

Combine the 5-step-method with production friendly thinking. This can give you e.g.
- fast and easy restart of machines after a safety stop
- enough space to safely program a robot
- places outside the risk area to observe the production
- electrically interlocked doors, instead of guards attached with screws, to be able to take the necessary measures for removing production disturbances
- a safety system that is practical for all types of work tasks, even when removing production disturbances

The likelihood that the safety solution will be well made, well received and suitable for the application increases if each risk is handled according to the 5-step-method.

Examples of regularly used EN/ISO standards

EN ISO 12100	Safety of machinery - General principles for design - Risk assessment and risk reduction	**The primary purpose of this standard is to provide designers with an overall framework and guidance for decisions during the development of machinery to enable them to design machines that are safe for their intended use.**
EN ISO 13857	Safety of machinery - Safety distances to prevent hazard zones being reached by upper and lower limbs	**This standard establishes values for safety distances to prevent danger zones being reached by the upper and lower limbs. The distances apply when adequate safety can be achieved by distances alone.**
EN ISO 13854	Safety of machinery – Minimum gaps to avoid crushing of parts of the human body	**The object of this standard is to enable the user (e.g. standard makers, designers of machinery) to avoid hazards from crushing zones. It specifies minimum gaps relative to parts of the human body and is applicable when adequate safety can be achieved by this method.**
EN ISO 13850	Safety of machinery – Emergency stop – Principles for design	**This standard specifies design principles for emergency stop equipment for machinery. No account is taken of the nature of the energy source.**
ISO 13851	Safety of machinery – Two-hand control devices – Principles for design and selection	**This standard specifies the safety requirements of a two-hand control device and its logic unit. The standard describes the main characteristics of two-hand control devices for the achievement of safety and sets out combinations of functional characteristics for three types.**
EN ISO 14120	Safety of machinery – Guards – General requirements for the design and construction of fixed and movable guards	**This standard specifies general requirements for the design and construction of guards provided primarily to protect persons from mechanical hazards.**
EN ISO 13849-1	Safety of machinery – Safety-related parts of control systems – Part 1: General principles for design	**This standard provides safety requirements and guidance on the principles for the design of safety-related parts of control systems. For these parts it specifies categories and describes the characteristics of their safety functions. This includes programmable systems for all machinery and for related protective devices. It applies to all safety-related parts of control systems, regardless of the type of energy used, e.g. electrical, hydraulic, pneumatic, mechanical. It does not specify which safety functions and which categories shall be used in a particular case.**
EN ISO 13849-2	Safety of machinery - Safety-related parts of control systems - Part 2: Validation	**This standard specifies the procedures and conditions to be followed for the validation by analysis and testing of: • the safety functions provided, and • the category achieved of the safety-related parts of the control system in compliance with EN 954-1 (ISO 13849-1), using the design rationale provided by the designer.**
EN 62061	Safety of machinery - Functional safety of safety-related electrical, electronic and programmable electronic control systems	**The standard defines the safety requirements and guiding principles for the design of safety-related electrical/electronic/programmable parts of a control system.**
EN ISO 13855	Safety of machinery - Positioning of safeguards with respect to the approach speeds of parts of the human body	**This standard provides parameters based on values for hand/arm and approach speeds and the methodology to determine the minimum distances from specific sensing or actuating devices of protective equipment to a danger zone.**
EN ISO 14119	Safety of machinery - Interlocking devices associated with guards - Principles for design and selection	**This standard specifies principles for the design and selection — independent of the nature of the energy source — of interlocking devices associated with guards. The standard provides measures to minimize defeat of interlocking devices in a reasonably foreseeable manner.**
EN 60204-1	Safety of machinery - Electrical equipment of machines - Part 1: General requirements	**This part of IEC 60204 provides requirements and recommendations relating to the electrical equipment of machines so as to promote: – safety of persons and property; – consistency of control response; – ease of maintenance.**

Standards for safety in control systems

Building a protection system that works in practice and provides sufficient safety requires expertise in several areas. The design of the safety functions in the protection system in order to ensure they provide sufficient reliability is a key ingredient. As help for this there is, for example, the EN ISO 13849-1 standard. The purpose of this text is to provide an introduction to the standard and its application in conjunction with our products. Please note that outside of the European Union there are often other standards that are used in place of EN ISO 13849.

Introducing the standard
The generation change for standards on safety in control systems introduced new concepts and calculations for machine builders and machine users. The EN 954-1 standard has been phased out and is replaced by EN ISO 13849-1 (PL, Performance Level) and EN 62061 (SIL, Safety Integrity Level).

PL or SIL? What should I use?
The standard you should use depends on the choice of technology, experience and customer requirements.

Choice of technology
– PL (Performance Level) is a technology-neutral concept that can be used for electrical, mechanical, pneumatic and hydraulic safety solutions.
– SIL (Safety Integrity Level) can, however, only be used for electrical, electronic or programmable safety solutions.

Experience
EN ISO 13849-1 uses categories from EN 954-1 for defining the system structure, and therefore the step to the new calculations is not so big if you have previous experience of the categories. EN 62061 defines the structures slightly differently.

Customer requirements
If you or your end customer comes from an industry that is accustomed to using SIL (e.g. the process industry), requirements can also include safety functions for machine safety being SIL rated.

We notice that most of our customers prefer PL as it is technology-neutral and that they can use their previous knowledge in the categories. In this text we show some examples of how to build safety solutions in accordance with EN ISO 13849-1 and calculate the reliability of the safety functions to be used for a particular machine. The examples in this text are simplified in order to provide an understanding of the principles. The values used in the examples can change.

What is PL (Performance Level)?
PL is a measure of the reliability of a safety function. PL is divided into five levels (a-e). PL e gives the best reliability and is equivalent to that required at the highest level of risk.

To calculate which PL level the system achieves you need to know the following:
– The system's structure (categories B, 1-4)
– The Mean Time To dangerous Failure of the component ($MTTF_d$)
– The system's Diagnostic Coverage (DC)

You will also need to:
– protect the system against simultaneous failure of both channels (CCF)
– protect the system from systematic errors built into the design
– follow certain rules to ensure software can be developed and validated in the right way

The five PL-levels (a-e) correspond to certain ranges of PFH_D-values (probability of dangerous failure per hour). These indicate how likely it is that a dangerous failure could occur over a period of one hour. In the calculation, it is beneficial to use PFH_D-values directly as the PL is a simplification that does not provide equally accurate results.

What is the easiest way of complying with the standard?
1. Use pre-calculated components.
As far as it is possible, use components with pre-calculated PL and PFH_D-values. You then minimise the number of calculations to be performed. All ABB Jokab Safety products have pre-calculated PFH_D-values.

2. Use a calculation tool.
With the calculation softwares FSDT or SISTEMA you avoid making calculations by hand. You also get help to structure your safety solutions and provide the necessary documentation.

3. Use Pluto or Vital
Use the Pluto programmable safety controller or Vital safety controller. Not only is it easier to make calculations and changes in the future, but above all it is easier to ensure a higher level of safety.

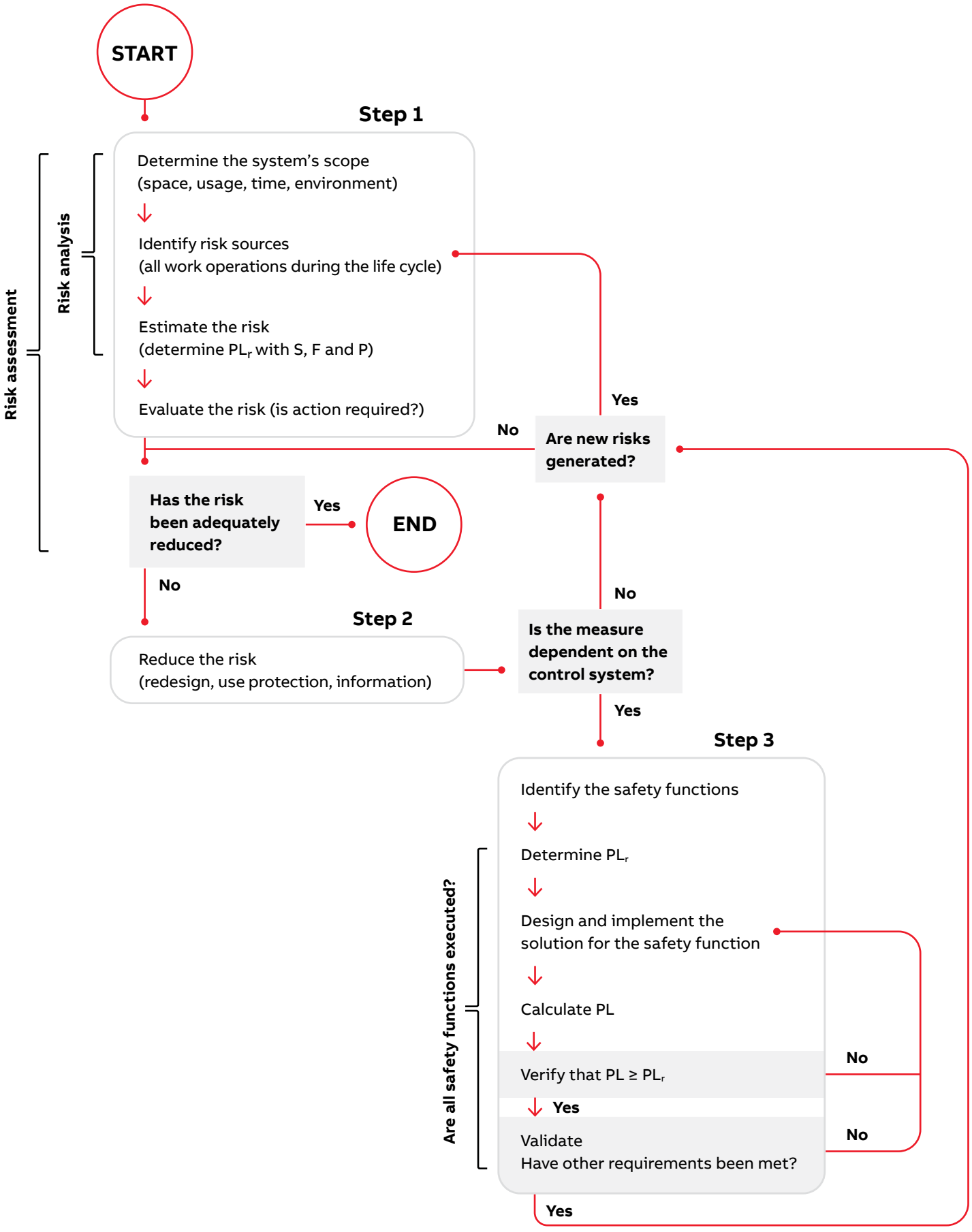
START
Step 1
Determine the system's scope
(space, usage, time, environment)
Identify risk sources
(all work operations during the life cycle)
Estimate the risk
(determine PLr with S, F and P)
Evaluate the risk (is action required?)
Risk analysis
Risk assessment
Yes
No
Are new risks generated?
Has the risk been adequately reduced?
Yes
END
No
Step 2
Reduce the risk
(redesign, use protection, information)
No
Is the measure dependent on the control system?
Yes
Step 3
Identify the safety functions
Determine PLr
Design and implement the solution for the safety function
Calculate PL
Verify that PL ≥ PLr
No
Yes
Validate
Have other requirements been met?
No
Yes
Are all safety functions executed?

Risk estimation
To calculate the performance level required (PL_r).

S	**Severity of injury**
S1	slight (normally reversible injury)
S2	serious (normally irreversible injury or death)
F	**Frequency and/or exposure to hazard**
F1	seldom to less often and/or exposure time is short
F2	frequent to continuous and/or exposure time is long
P	**Possibility of avoiding hazard or limiting harm**
P1	possible under specific conditions
P2	scarcely possible

Risk assessment and risk minimisation
According to the Machinery Directive, the machine builder (anyone who builds or modifies a machine) is required to perform a risk assessment for the machine design and also include an assessment of all the work operations that need to be performed. EN ISO 12100 stipulates the requirements for a risk assessment. It is this that EN ISO 13849-1 is based on, and a completed risk assessment is a prerequisite for being able to work with the standard.

Step 1 – Risk assessment
A risk assessment begins with determining the scope of the machine. This includes the space that the machine and its operators need for all of its intended applications, and all operational stages throughout the machine's life cycle.
All risk sources must then be identified for all work operations throughout the machine's life cycle.
A risk estimation is made for each risk source, i.e. indication of the degree of risk. According to EN ISO 13849-1 the risk is estimated using three factors: injury severity (S), frequency of exposure to the hazard (F) and the possibility you have of avoiding or limiting the injury (P). For each factor two options are given. Where the boundary between the two options lies is not specified in the standard, but the following are common interpretations and our recommendations:

S1	**bruises, abrasions, puncture wounds and minor crushing injuries**
S2	**skeletal injuries, amputations and death**
F1	**less frequent than once per 15 min***
F2	**once per 15 min or exposure time exceeding 1/20 of the overall operating time**
P1	**slow machine movements, plenty of space, low power**
P2	**quick machine movements, crowded, high power**

* We often recommend to choose a higher value to be on the safe side, e.g. once per day.
By selecting S, F and P for the risk, you will get the PL_r that is necessary for the risk source.
Finally, the risk assessment includes a risk evaluation where you determine if the risk needs to be reduced or if sufficient safety is ensured.

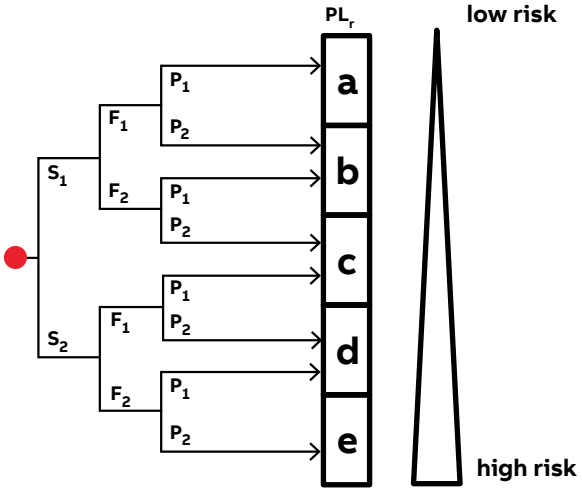

Step 2 – Reduce the risk
If you determine that risk reduction is required, you must comply with the priority in the Machinery Directive in the selection of measures:
1. Avoid the risk already at the design stage. (E.g. reduce power, avoid interference in the danger zone.)
2. Use protection and/or safety devices. (E.g. fences, light grids or control devices.)
3. Provide information about how the machine can be used safely. (E.g. in manuals and on signs.)

If risk reduction is performed using safety devices, the control system that monitors these needs to be designed as specified in EN ISO 13849-1.

Step 3 - Design and calculate the safety functions
To begin with you need to identify the safety functions on the machine. (Examples of safety functions are emergency stop and monitoring of gate.)

For each safety function, a PL_r should be established (which has often already been made in the risk assessment). The solution for the safety function is then designed and implemented. Once the design is complete, you can calculate the PL the safety function achieves. Check that the calculated PL is at least as high as PL_r and then validate the system as per the validation plan. The validation checks that the specification of the system is carried out correctly and that the design complies with the specification.You will also need to verify that the requirements that are not included in the calculation of the PL are satisfied, that is, ensure that the software is properly developed and validated, and that you have taken adequate steps to protect the technical solution from systematic errors.

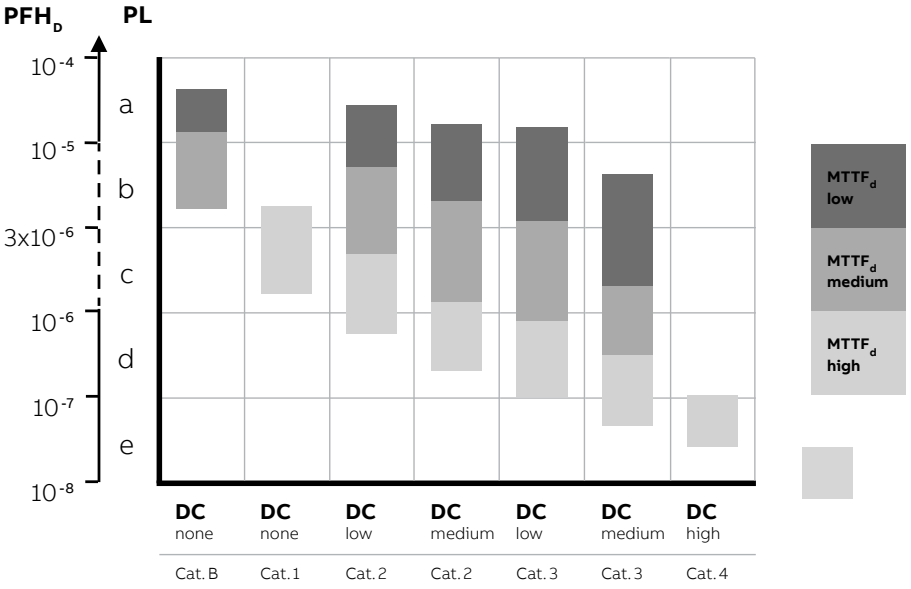

The relationship between categories, the DC_{avg}, $MTTF_d$ for each channel and PL. The table also shows the PFH_D-range that corresponds to each PL.

PL calculation in Step 3

When you calculate the PL for a safety function, it is easiest to split it into separate, well defined blocks (also called subsystems). It is often logical to make the breakdown according to input, logic and output (e.g. switch - safety relay - contactors), but there may be more or fewer than three blocks depending on the connection and the number of components used (an expansion relay could for example create an additional logic block) .

For each block, you calculate a PL or PFH_D-value. It is easiest if you obtain these values from the component manufacturer, so you do not have to calculate yourself. The manufacturer of switches, sensors and logic devices often have PL and PFH_D-values for their components, but for mechanical devices (such as key switches or contactors) a PL-value cannot be supplied since it depends on how often the component will be used. You then need to calculate yourself according to EN ISO 13849-1 or use default values from the standard, if provided.

To calculate PL or PFH_D for a block, you need to know its category, DC and $MTTF_d$. In addition, you need to protect the system against systematic errors and ensure that an error does not knock out both channels, and generate and validate any software used correctly. The following text gives a brief explanation of what to do.

Safety function (SF)

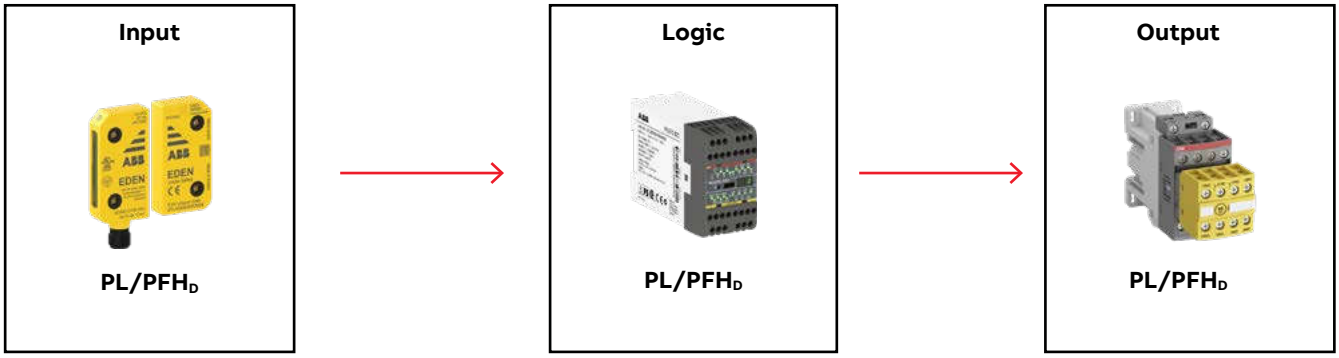

$PFH_{D,\ Total} = PFH_{D,\ Input} + PFH_{D,\ Logic} + PFH_{D,\ Output}$

Category
The structure for the component(s) in the block is assessed to determine the category (B, 1-4) it corresponds to. For category 4, for example, individual failures do not result in any loss of the safety function.
In order to achieve category 4 with contactors, you need to have two channels - i.e., two contactors - that can cut the power to the machine individually. The contactors need to be monitored by connecting opening contacts to a test input on, for example a safety relay. For monitoring of this type to work, the contactors need to have positive-guided contacts.

Diagnostic Coverage (DC)
A simple method to determine DC is explained in Appendix E in EN ISO 13849-1. It lists various measures and what they correspond to in terms of DC. For example, DC=99 % (which corresponds to DC high) is achieved for a pair of contactors by monitoring the contactors with the logic device.

Mean Time To dangerous Failure ($MTTF_d$)
The $MTTF_d$-value should primarily come from the manufacturer. If the manufacturer cannot provide values, they are given from tables in EN ISO 13849-1 or you have to calculate $MTTF_d$ using the B_{10d}-value, (average number of cycles until 10% of the components have a dangerous failure). To calculate the $MTTF_d$, you also need to know the average number of cycles per year that the component will execute.

Calculation of the average number of cycles is as follows:

$$MTTF_d = \frac{B_{10d}}{0{,}1 \times n_{op}}$$

where

$$n_{op} = \frac{d_{op} \times h_{op} \times 3600}{t_{cycle}}$$

n_{op}	=	Number of cycles per year
d_{op}	=	Operation days per year
h_{op}	=	Operation hours per day
t_{cycle}	=	Cycle time (seconds)

Example: d_{op}= 365 days, h_{op}= 24 hours and t_{cycle}= 1,800 seconds (2 times/hour) which gives n_{op}= 17,520 cycles. With a B_{10d}=$2 \cdot 10^6$ this gives a $MTTF_d$=1,141 year which corresponds to $MTTF_d$=high.
Note that when you calculate $MTTF_d$ you have to calculate according to the total number of cycles the component will be working. A typical example of this is the contactors that frequently work for several safety functions simultaneously. This means that you must add the number of estimated cycles per year from all the safety functions that use the contactors.
When $MTTF_d$ is calculated from a B_{10d}-value, also consider that if the $MTTF_d$-value is less than 200 years, the component needs to be replaced after 10% of the $MTTF_d$-value (due to the T_{10d}-value). That is, a component with $MTTF_d$ = 160 years needs to be replaced after 16 years in order for the conditions for achieving PL to continue to be valid. This is because EN ISO 13849-1 is based on a “mission time” of 20 years.

Common Cause Failure (CCF)
In Appendix F of EN ISO 13849-1 there is a table of actions to be taken to protect against CCF, to ensure a failure does not knock out both channels.

Systematic errors
Appendix G of EN ISO 13849-1 describes a range of actions that need to be taken to protect against incorporating faults into your design.

PL for safety functions
PL is given in the table on the previous page. If you want to use an exact PFH_D-value instead, this can be produced using a table in Appendix K in EN ISO 13849-1.
Once you have produced the PL for each block, you can generate a total PL for the safety function in Table 11 of EN ISO 13849-1. This gives a rough estimate of the PL. If you have calculated PFH_D for each block instead, you can get a total of PFH_D for the safety function by adding together all the values of the blocks. The safety function’s total PFH_D corresponds to a particular PL in Table 3 of EN ISO 13849-1.

Requirements for safety-related software
If you use a safety PLC for implementing safety functions, this places requirements on how the software is developed and validated. To avoid error conditions, the software should be readable, understandable and be possible to test and maintain.
A software specification must be prepared to ensure that you can check the functionality of the program. It is also important to divide the program into modules that can be tested individually. Paragraph 4.6 and Appendix J of EN ISO 13849-1 specify requirements for safety related software.
The following are examples of requirements for software from EN ISO 13849-1:
- A development life cycle must be produced with validation measures that indicate how and when the program should be validated, for example, following a change.
- The specification and design must be documented.
- Function tests must be performed.
- Validated functional blocks must be used whenever possible.
- Data and control flow are to be described using, for example, a condition diagram or software flow chart.

Case study 1 - Safety relay Sentry

Protection layout for a packaging machine with low risks

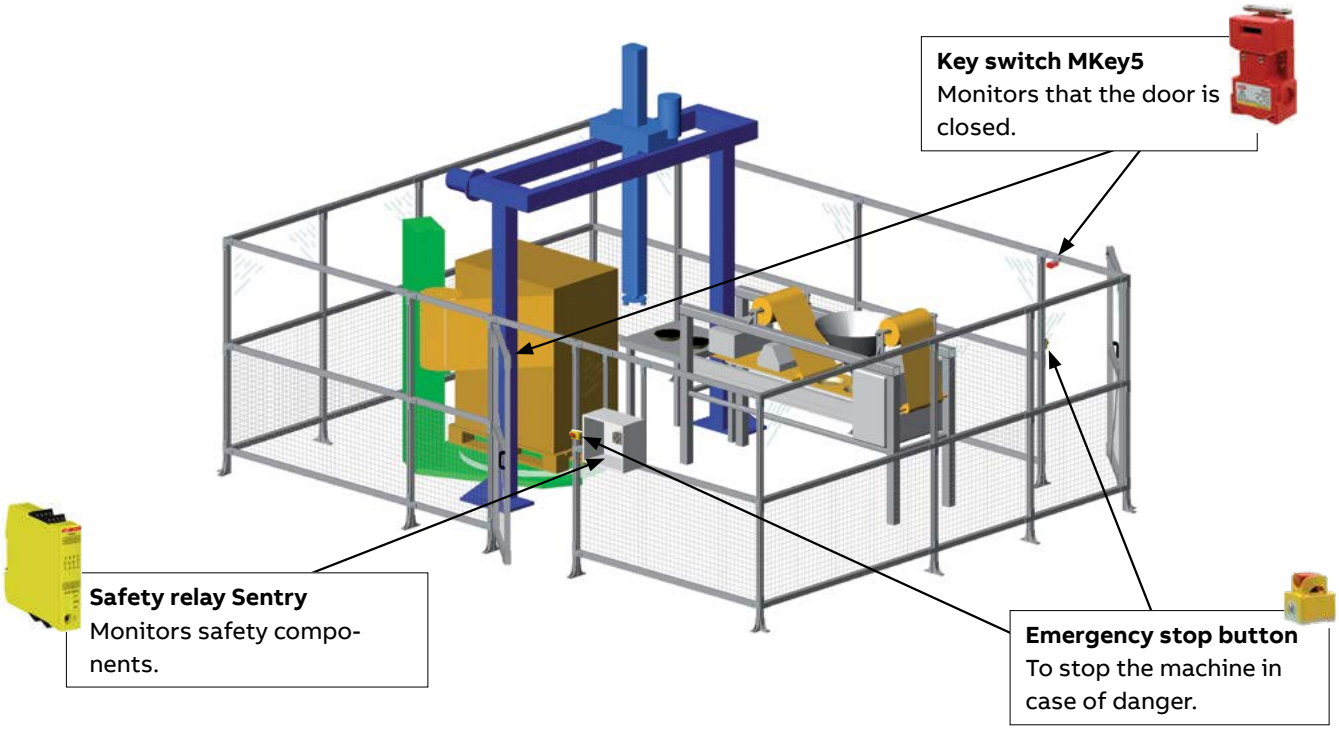

Step 1 – Risk assessment
Food to be packaged is loaded into the cell manually through the rear door. A batch is prepared for the packing conveyor in the infeed hopper. The cell is reset and restarted. The packaging machine with conveyor belt only operates when both doors are closed and when the protection system has been reset.

In the risk assessment it was established that the machine is to be operated in three shifts (8 hours per shift) 365 days a year. The total access to the danger zone is estimated to be four times per hour (F2), including manual packaging and tending operational disturbances. Unexpected start-ups are not considered to cause serious injury but rather minor healable injuries (S1). The operator is considered not to have the possibility of avoiding injury as the machine moves quickly (P2).

The number of cycles for the safety function = 365 days/year x (3x8) hours/day x 2 cycles/hour = 17,520 cycles/year
The assessment for the safety function required for access to the machine is PL_r= c (S1, F2, P2). In addition to this safety function, an emergency stop function is needed. This is also assessed as PL_r=c.

Step 2 – Reduce the risk
As protection, an interlocked door is selected with the key switch MKey5. Stopping time is short enough for the dangerous movement to have ceased before the operator can access it. The emergency stop is placed within easy reach, on both sides of the cell near the doors.

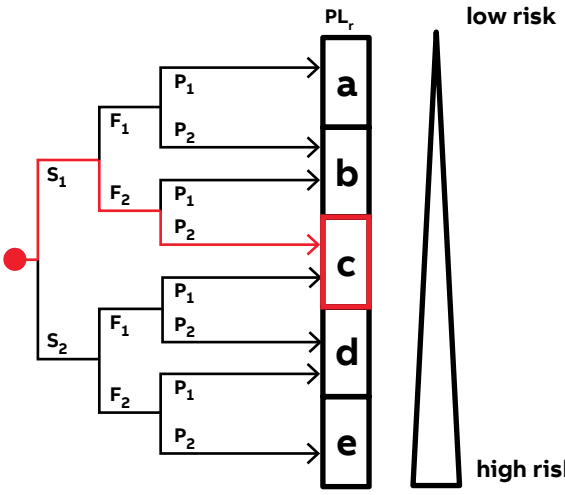

Determination of the PL_r necessary for the safety function with interlocked door for this example.

NOTE!
The assessment needs to be made for each safety function.

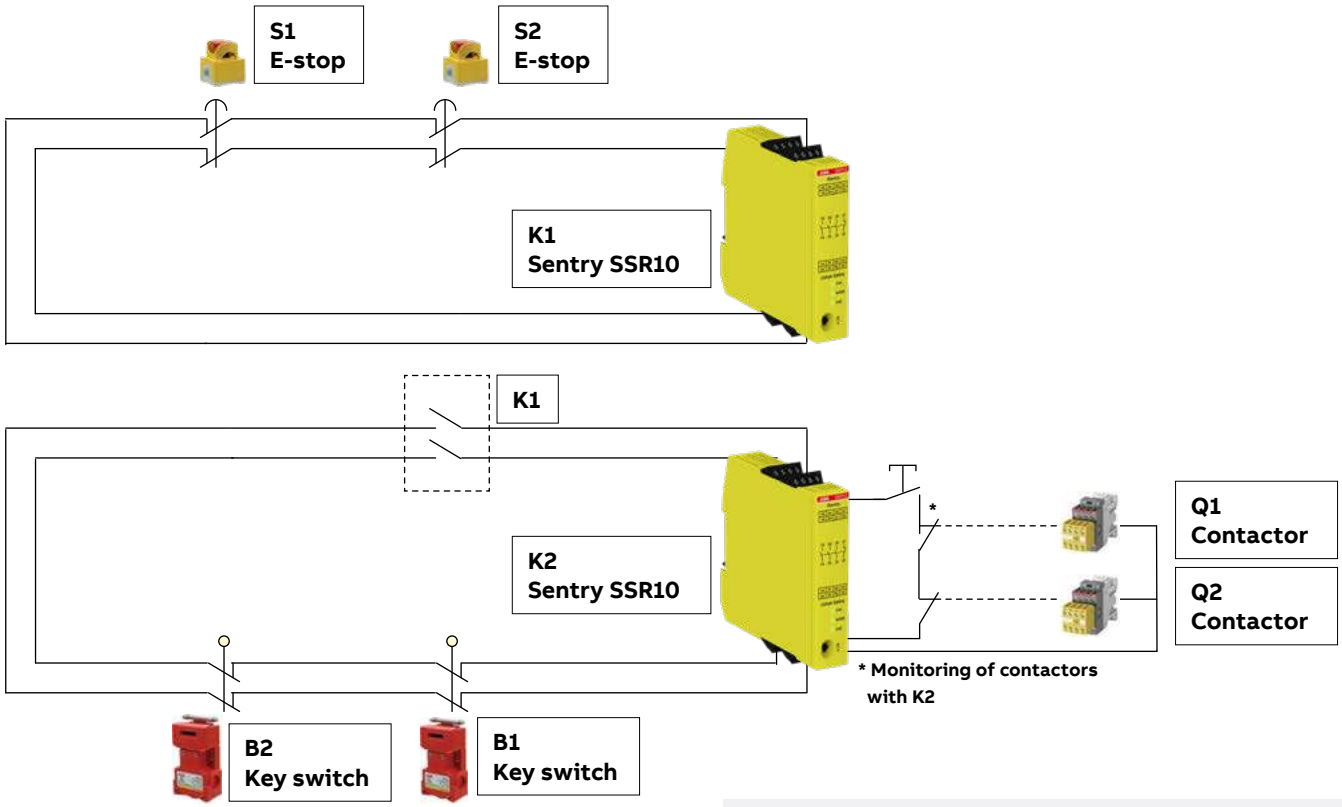

Step 3 - Calculate the safety functions

The output subsystem that is composed of double monitored contactors has been calculated at $2.47x10^{-8}$. The safety functions are represented by block diagrams.

Safety functions 1 and 2 are identical. Therefore, only safety function 1 is shown.

Safety functions 3 and 4 are identical. Therefore, only safety function 3 is shown.

How safe is a mechanical switch?

Mechanical switches have a tendency to break if misused. Manufacturer instructions must be followed, e.g. no excessive force or dirty environment. For interlocking switches in general EN ISO 14119 must be considered. It handles e.g. the possibility to defeat a switch and requirements on key switches. Connecting key switches in series gives a significant risk of masking errors, as stated in the technical report ISO/TR 24119, which limits the maximum achievable DC depending on the number of frequently used doors connected in series.

Safety function 1	Input	Logic	Output	Result
PL_r=c →	**B1** MKey5 (PL c) →	**K2** Sentry (PL e) →	**Q1/Q2** Contactors (PL e) →	**PL c**

$PFH_{D,\ MKey5} + PFH_{D,\ Sentry} + PFH_{D,\ Contactors} = 1.14x10^{-6} + 4.9x10^{-9} + 2.47x10^{-8} = 1.17x10^{-6}$ → PL c

Safety function 3	Input	Logic	Logic	Output	Result
PL_r=c →	**S1** E-stop (PL e) →	**K1** Sentry (PL e) →	**K2** Sentry (PL e) →	**Q1/Q2** Contactors (PL e) →	**PL e**

$PFH_{D,\ E\text{-}stop} + PFH_{D,\ Sentry} + PFH_{D,\ Contactors} = 4.3x10^{-8} + 4.9x10^{-9} + 4.9x10^{-9} + 2.47x10^{-8} = 7.75x10^{-8}$ → PL e

The reason for not achieving more than PL c with Safety function 1 is that only one key switch is used per door, and a key switch is mechanically a Category 1 device. For e-stop devices though, a fault exclusion for the mechanical parts is allowed according to EN ISO 13849-2 if a maximum number of operations is considered. For this solution to reach a higher PL, EN ISO 14119 and ISO/TR 24119 need to be consulted.

Case study 2 - Safety controller Vital

Protection layout for a robot cell with high risks

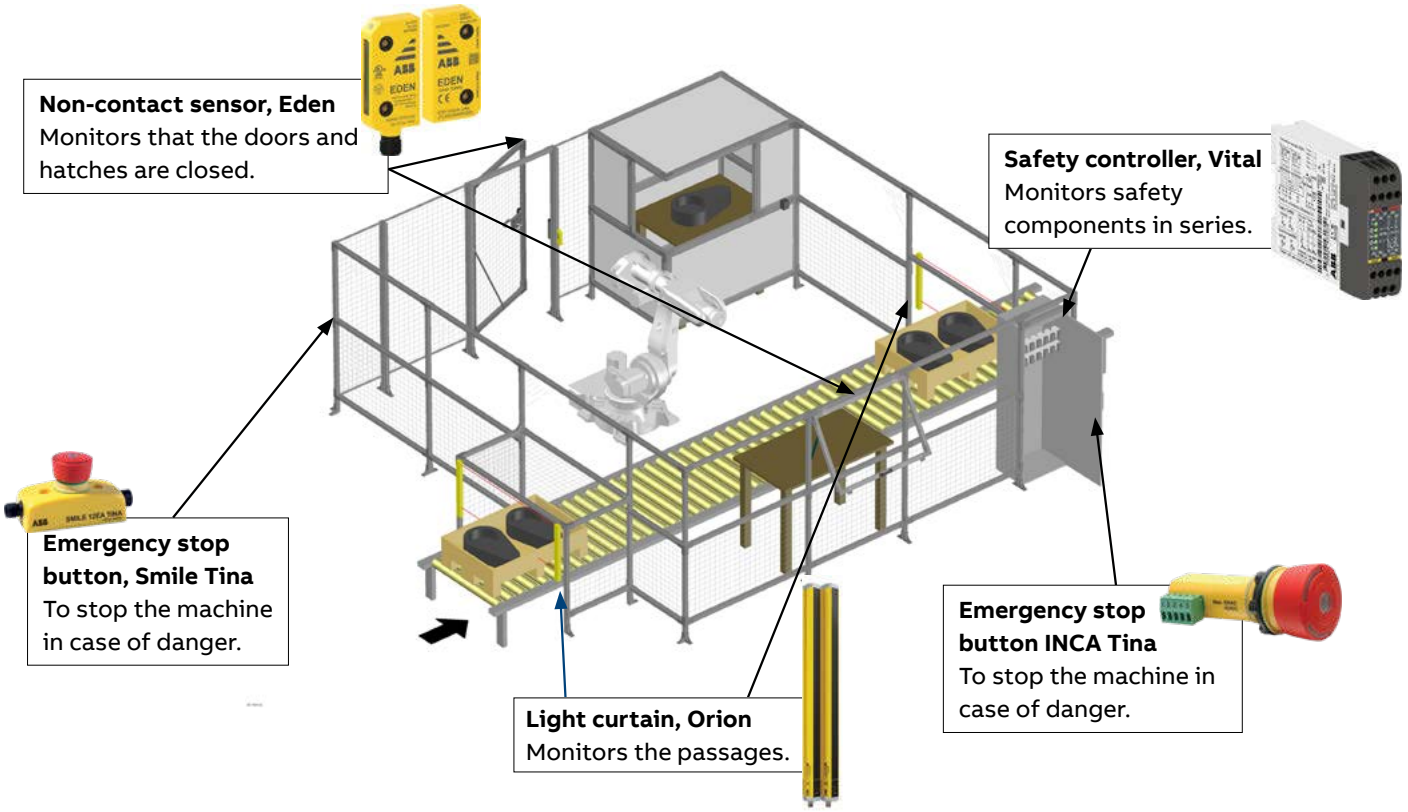

Step 1 – Risk assessment

The workpieces are transported into the robot cell where the robot places them in a test cabinet. Approved workpieces leave the cell on the conveyor belt, while workpieces that fail the tests are placed on the table for manual adjustments. The work that needs to be done in the robot cell is to correct operational disturbances for the test equipment and the conveyor belt (about once/day), unloading from the manual station (about four times an hour), program adjustments (once/week) and cleaning (once/week) (F2). Unexpected start-ups of the robot are considered to cause potentially serious injury (S2). The operator is considered not to have the possibility of avoiding injury as the robot moves quickly (P2). The risk estimation gives PL_r=e (S2, F2, P2) for the safety functions required for access to the machine.

The standard for robot systems/cells (EN ISO 10218-2) specifies that safety functions shall comply with at least PL d, unless the risk assessment determines otherwise. In this case the risk assessment gives us PL_r= e.

Step 2 – Reduce the risk

As protection, the door and hatch are interlocked with Eden non-contact sensors. To protect against entering the cell the wrong way, transport of materials in and out is protected with light curtains and provided with muting to distinguish between material and people. The emergency stop function is also a safety function that is required.

The energy to all hazardous machine functions shall be removed by all safety functions.

The solution with Vital makes it possible to implement a robot application with only one safety controller, which does not need to be configured or programmed. Vital makes it possible to connect up to 30 safety functions in a single DYNlink loop, with PL e in accordance with EN ISO 13849-1.

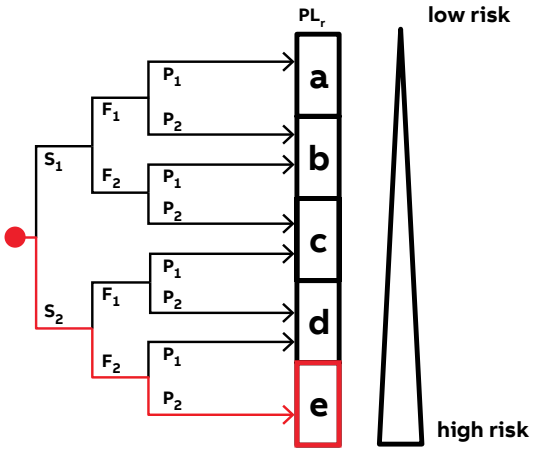

Determination of PLr for the safety function with interlocked door.

NOTE!

The assessment needs to be made for each safety function.

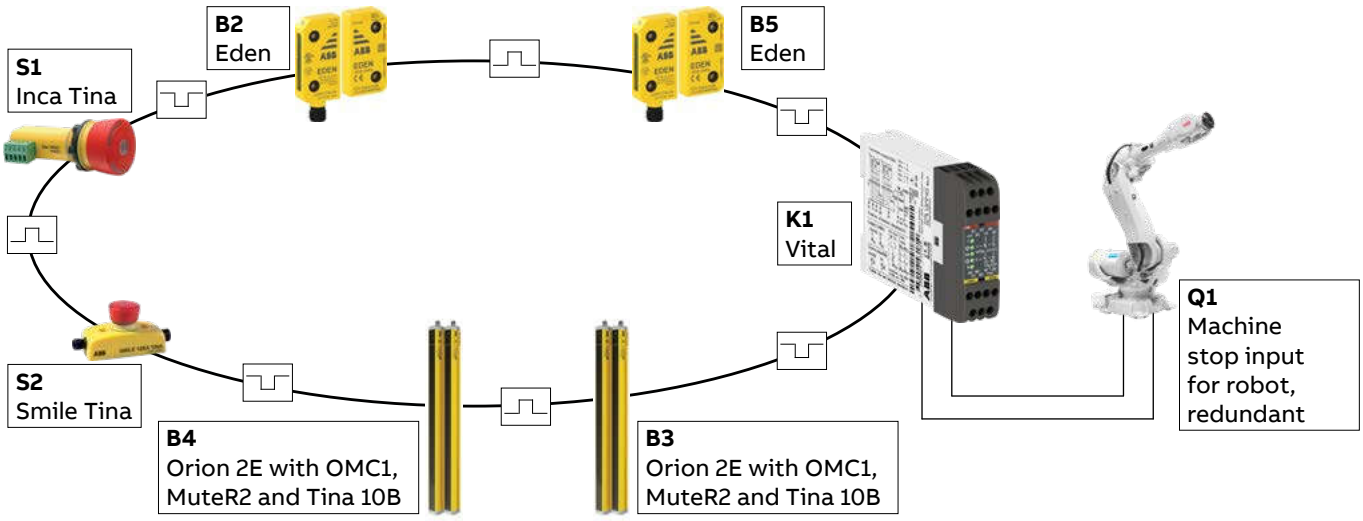

Step 3 - Calculate the safety functions
The PFH_D-value of the robot's safety stop input is $5.79x10^{-8}$ (the value applies to ABB industrial robots with IRC5 controller). The safety functions are represented by block diagrams.

Safety function 3 - muting of light guards
If the logic of the muting function is included in the light guard, the PFH_D-value of the light guard should include the PFH_D-values for the muting components. If the logic is external (i.e. safety PLC) the muting sensors should be added as separate blocks in the safety function.

Safety function 1

	Input	Logic	Output	Result
PL_r=e →	B1 Eden (PL e) →	K1 Vital (PL e) →	Q1 Robot (PL e) →	PL e

$PFH_{D, Eden} + PFH_{D, Vital} + PFH_{D, Robot} = 4.5x10^{-9} + 2.74x10^{-8} + 5.79x10^{-8} = 8.98x10^{-8}$ → PL e

Safety function 2

	Input	Logic	Output	Result
PL_r=e →	S2 Smile Tina (PL e) →	K1 Vital (PL e) →	Q1 Robot (PL e) →	PL e

$PFH_{D, Smile\ Tina} + PFH_{D, Vital} + PFH_{D, Robot} = 4.66x10^{-9} + 2.74x10^{-8} + 5.79x10^{-8} = 9.0x10^{-8}$ → PL e

Safety function 3

	Input		Logic	Output	Result
PL_r=e →	B3 Orion with muting (PL e) →	Tina 10B (PL e) →	K1 Vital (PL e) →	Q1 Robot (PL e) →	PL e

$PFH_{D, Orion} + PFH_{D, Tina\ 10} + PFH_{D, Vital} + PFH_{D, Robot} = 2.64x10^{-9} + 4.5x10^{-9} + 2.74x10^{-8} + 5.79x10^{-8} = 9.24x10^{-8}$ → PL e

These safety functions with Vital meet PL e in accordance with EN ISO 13849-1. Note that the above functions are only selected examples of the safety functions in the robot cell.

Case study 3 - Programmable safety controller Pluto

Protection layout for a production cell with high risks

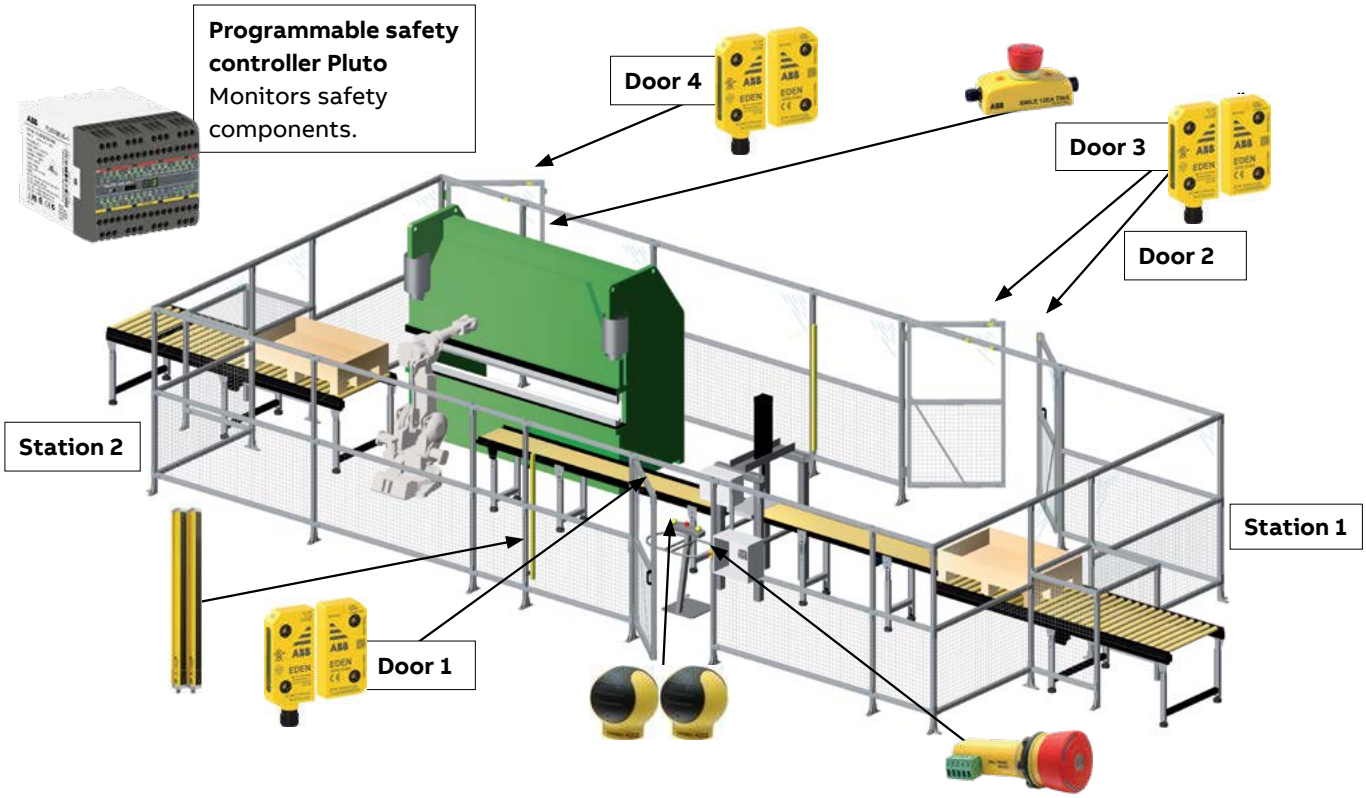

Step 1 – Risk assessment

The workpieces are fed into the cell through a conveyor belt and positioned by the operator in the pneumatic machining tool in station 1. The operator starts station 1 manually. The operator then places the workpiece on the conveyor belt for transfer to station 2. A light curtain prevents the operator from entering station 2 unnoticed. The robot in station 2 places the workpiece in the hydraulic press. The workpiece leaves the cell by transport out onto the conveyor.

The work that needs to be done in station 2 is, e.g. to address operational disturbances in the press and the robot a few times a week (F1). Unexpected start-ups of the robot are considered to cause serious injury (S2). The operator is considered not to have the possibility of avoiding injury as the robot moves quickly (P2). The risk estimation for the safety function required for access to station 2 is PL_r=e (S2, F2, P2). This estimation would still be the same for the press. For the safety function for the risks associated with the conveyor belt, the estimation S1, F2, P1 is made giving PL_r= b.

Step 2 – Reduce the risk

As protection, interlocked doors are selected with the Eden non-contact sensor. Station 1 with the pneumatic machining tool is operated by a two-hand device. When the two-hand device is released, the dangerous movement will be stopped safely. Station 2 can be in automatic mode, when a light curtain (Orion) and a non-contact sensor at door 4 (Eden) protects the entry. If the door is opened or the light curtain is interrupted, energy to the hazardous functions in station 2 is removed. By opening doors 2 and 3 (also monitored by Eden sensors) the conveyor belt and the pneumatic machining tool will stop safely. Manual reset must always be done after actuation of any safety device.

When the protection system requires a number of safety devices and that multiple machines must be stopped, Pluto programmable safety controller is the most effective solution. If the protection system also has to work by zones and in different modes of operation, this is another good reason to use Pluto. With Pluto, PL e can be achieved regardless of the number of connected safety devices.

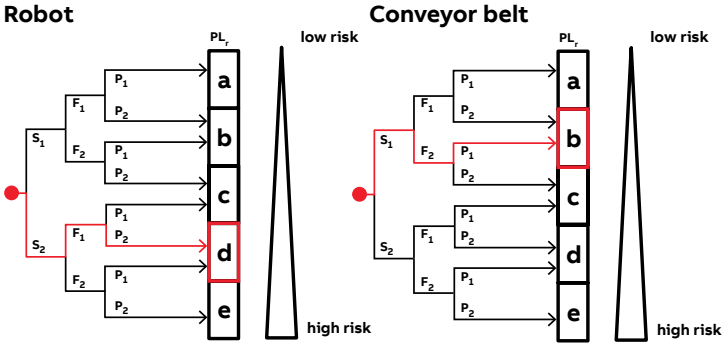

PL_r= d for the robot and hydraulic press. PL_r=b for the conveyor belt.

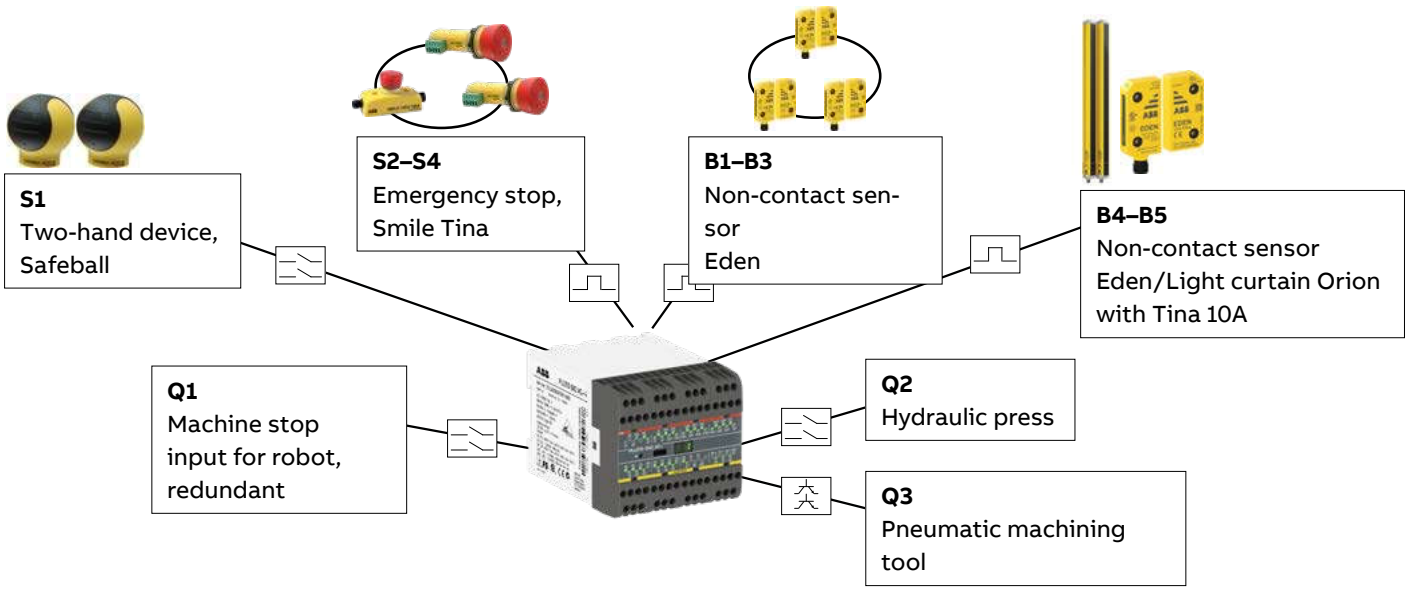

Step 3 - Calculate the safety functions for the robot cell
The PFH_D-value for the robot's safety stop input is $5.79x10^{-8}$ (the value applies to ABB industrial robots with IRC5 controller).

Only safety functions to help remove energy to the industrial robot are shown below. This is only a subset of the safety functions. When energy is removed to multiple machines in a cell, the safety functions can be defined in different ways depending on the risk assessment. The safety functions are represented by block diagrams.

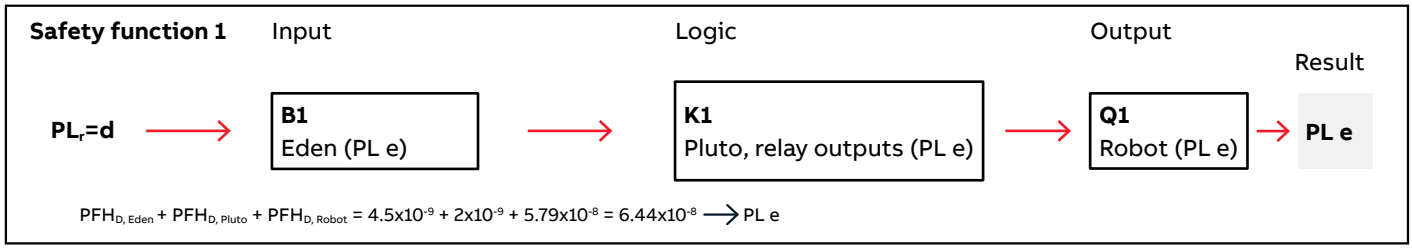

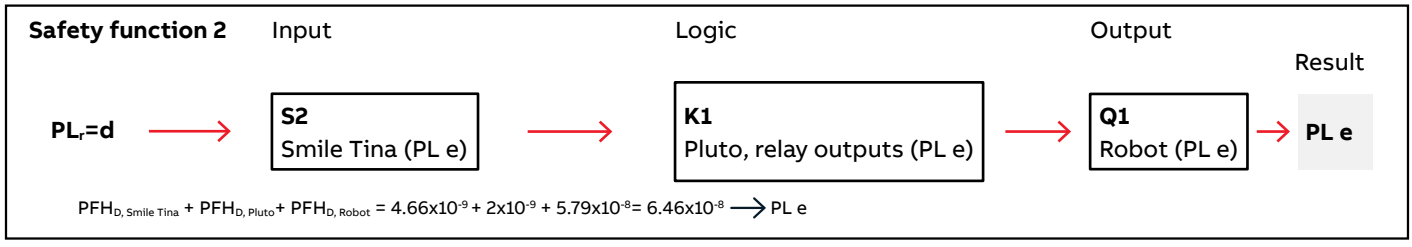

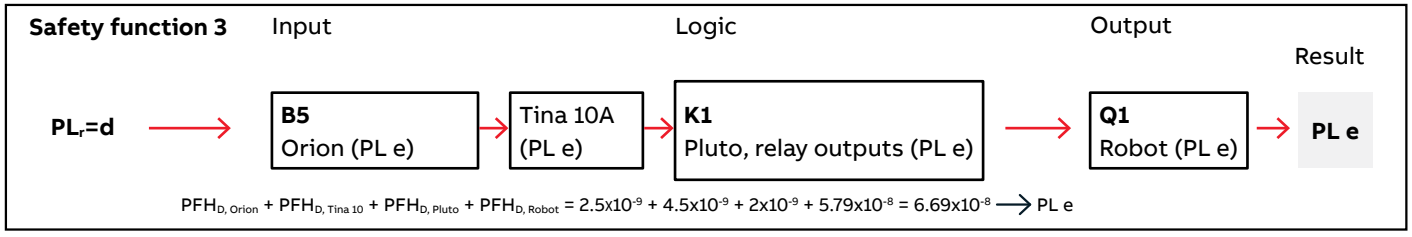

These safety functions with Pluto meet PL e in accordance with EN ISO 13849-1. Note that the above functions are only selected examples of the safety functions in the robot cell.

What defines a safety function?

Calculating that you have achieved the PL_r that is required is not difficult, especially if you use "pre-calculated" safety devices and logic units. But which parts should be included in each safety function?
This must be resolved before you start the calculations. To summarise in simple terms you can say that each safety device should be a part of the safety function for each machine that is affected by the safety device in question. Three safety devices that all remove the energy to three machines in a cell is therefore equal to nine safety functions. In the section that follows, we explain the background.

Multiple safety functions for a machine

Multiple safety devices are often used on a machine in order to provide satisfactory and practical protection for the operators. In the following example, a machine is protected by three safety devices connected to a logic device. The following figure illustrates this interconnection schematically.

Three safety functions (SF) are defined for the machine and are calculated as:
SF1: $PFH_{D, F1} + PFH_{D, K1} + PFH_{D, Q1} = PFH_{D, SF1}$
SF2: $PFH_{D, B1} + PFH_{D, K1} + PFH_{D, Q1} = PFH_{D, SF2}$
SF3: $PFH_{D, S1} + PFH_{D, K1} + PFH_{D, Q1} = PFH_{D, SF3}$

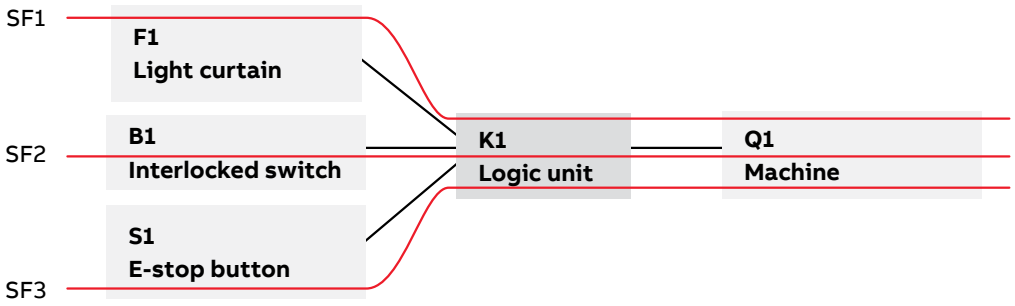

Multiple safety functions for multiple machines in a cell

It is quite common for several machines in a single cell/zone to be protected by multiple safety devices. The following figure illustrates the interconnection schematically for an example. Each of the machines Q1 – Q3 is shut down separately and independently by K1.

If the operator enters the cell, he is exposed in this case to the same type of risk from all three machines. The power to all three machines must be cut e.g. when the operator enters the cell through the door interlocked by B1.

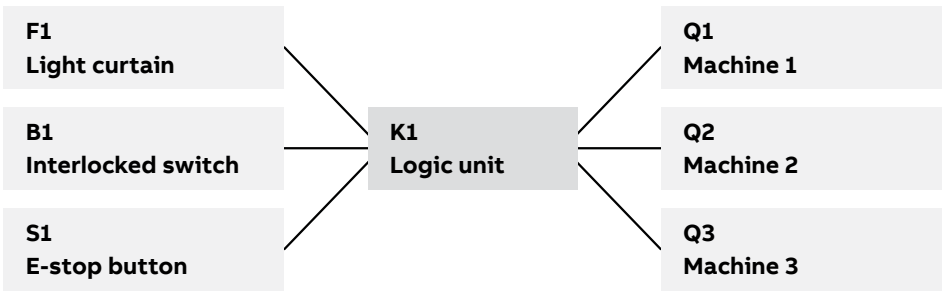

Theoretical approach for multiple machines
The theoretical approach to calculate the safety function is as follows:

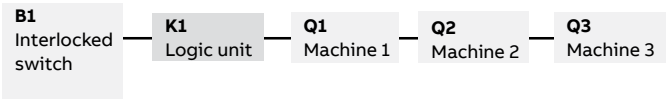

For the full safety function to be performed you require all the components to be working. Note that if B1 or K1 has a dangerous malfunction, the entire safety function is disabled. However, if for example machine Q1 has a dangerous malfunction, and is not shut down, machines Q2 and Q3 will still be shut down. One disadvantage in considering the safety function in this way is that you may have trouble achieving the PL_r required. But if you achieve the PL_r required, you can use the theoretical approach.

Sources:
http://www.dguv.de/medien/ifa/en/pra/en13849/safety_functions.pdf

Practical approach for multiple machines
A more practical approach is to divide the safety function into three parts, one for each of the three machines.

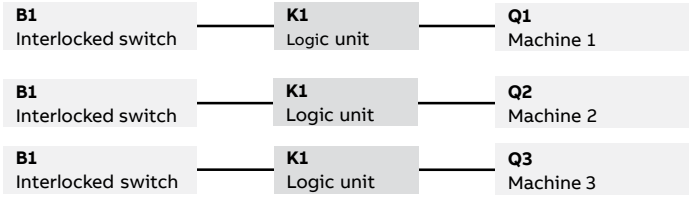

This is an approach that can provide a more accurate way of looking at the safety functions, especially where a different PL_r is required for the safety functions above. If machine Q1 is a robot and machine Q2 is a conveyor which is designed to have negligible risks, the different PL_r required to protect against risks from Q1 and Q2 will also be different. This practical approach is therefore the one recommended. The interpretation is based on information provided by IFA (Institut für Arbeitsschutz der Deutschen Gesetzlichen Unfallversicherung). For more information on this and other issues, see Sources.

Example of safety functions for multiple machines in a cell
For a cell with three machines (one robot, one hydraulic press and one pneumatic machining tool) a risk assessment is made resulting in different PL_r for the individual machines. The robot and the hydraulic press requires PL_r = e, while the pneumatic machining tool requires PL_r = d.
One of the safety functions is that a non-contact sensor (Eden) supervised by a safety PLC (Pluto) shall disconnect the energy to all three machines in the hazard zone:

- Eden B1 ($PFH_{D, B1} = 4.5x10^{-9}$)
- Pluto K1 ($PFH_{D, K1} = 2x10^{-9}$)
- Robot Q1 ($PFH_{D, Q1} = 5.79x10^{-8}$)
- Hydraulic press Q2 ($PFH_{D, Q2} = 8x10^{-8}$)
- Pneumatic machining tool Q3 ($PFH_{D, Q3} = 2x10^{-7}$).

Practical approach
If you use the practical approach the safety functions are as follows:
Robot:
$PFH_{D, B1} + PFH_{D, K1} + PFH_{D, Q1} = 4.5x10^{-9} + 2•10^{-9} + 5.79x10^{-8} = 6.44x10^{-8} \longrightarrow$ PL e
Hydraulic press:
$PFH_{D, B1} + PFH_{D, K1} + PFH_{D, Q2} = 4.5x10^{-9} + 2•10^{-9} + 8x10^{-8} = 8.65x10^{-8} \longrightarrow$ PL e
Pneumatic machining tool:
$PFH_{D, B1} + PFH_{D, K1} + PFH_{D, Q3} = 4.5x10^{-9} + 2x10^{-9} + 2x10^{-7} = 2.07x10^{-7} \longrightarrow$ PL d
This is to be done in a similar way with other safety functions for the cell. For each safety device, you define the machines it affects, and establish the various safety functions according to this.

Theoretical approach
What would the result be using the theoretical approach? Would the safety function achieve PL e?
All machines:
$PFH_{D, B1} + PFH_{D, K1} + PFH_{D, Q1} + PFH_{D, Q2} + PFH_{D, Q3}$
$= 4.5x10^{-9} + 2x10^{-9} + 5.79x10\text{-}8 + 8x10^{-8} + 2x10^{-7} = 3.44x10^{-7} \longrightarrow$ PL d
In this case, the safety function would not achieve a total PL e, which was required for the risks associated with the robot and hydraulic press.

Conclusions

- Use the practical approach for multiple machines.
- Use safety devices/logic units with high reliability (low PFH_D) to make it easy to achieve the PL_r required.
- With Vital or Pluto, it is easier to achieve the PL_r required.

Please note that the examples on these pages are simplified in order to explain the principles. Values of products can also change.

FSDT and SISTEMA

Tools for determining performance level (PL)

Tools to simplify the process of safety function design
FSDT is an ABB software for determining PL and SIL of safety functions and generating technical documentation. The tool helps simplifying the process of safety function design, verification and documentation. It supports the compliance of the requirements of both EN ISO 13849-1 and IEC 62061 as well as the European Machinery Directive. FSDT is freeware and can be downloaded from the ABB website.

Another commonly used software tool for the calculation of PL according to EN ISO 13849-1 is SISTEMA, developed by IFA (The Institute for Occupational Safety and Health) in Germany. With SISTEMA it is possible to “build” safety functions, verify them and generate the technical documentation required. The tool is freeware and can be downloaded from the IFA website.

To simplify the use of FSDT and SISTEMA with our products we have created a library containing all of our safety products.

2TLC172300D0201

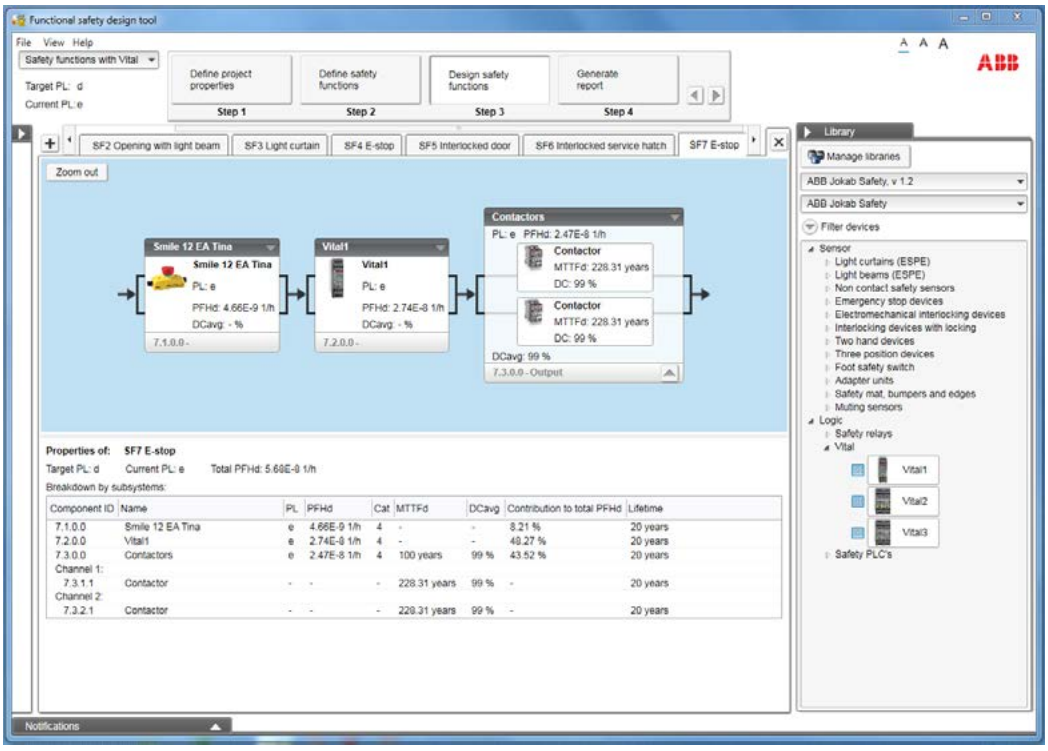

Applying IEC/EN 62061

If a safety function is designed in accordance with IEC/EN 62061, the level of reliability is expressed as the Safety Integrity Level, SIL. There are a total of 4 levels, but in the IEC/EN 62061 standard SIL 3 is the highest level. SIL is similar to PL (performance level) and uses the same PFH_D (probability of dangerous failure per hour) to express the reliability of components and systems.

Safety Integrity Level, SIL	Probability of dangerous Failure per Hour (PFH_D)
3	$\geq 10^{-8}$ to $<10^{-7}$
2	$\geq 10^{-7}$ to $<10^{-6}$
1	$\geq 10^{-6}$ to $<10^{-5}$

There is a method in IEC/EN 62061 for assigning the Safety Integrity Level.

Severity (Se)	Class (Cl)				
	3-4	5-7	8-10	11-13	14-15
4	SIL2	SIL2	SIL2	SIL3	SIL3
3		(OM)	SIL1	SIL2	SIL3
2			(OM)	SIL1	SIL2
1				(OM)	SIL1

Cl=Fr+Pr+Av
OM=Other Measures

The severity of injury that can occur is divided into four levels. Class is the addition of the values of frequency (Fr, stated as a value between 1 and 5, where 5 represents the highest frequency), probability that a dangerous event will occur (Pr, stated as a value between 1 and 5, where 5 represents the highest proability) and the possibility of avoiding or limiting injury (Av, stated as a value of 1, 3 or 5, where 5 represents the least chance of avoiding or limiting an injury).

The safety function that is to be designed must at least fulfill the SIL that has been assigned to it in the risk assessment. The safety function consists of a number of sub-elements. Example: a door is interlocked by a non-contact sensor which is in turn monitored by a Pluto safety PLC, with outputs that break the power to two supervised contactors. The sensor is sub-element 1, Pluto is sub-element 2 and the two supervised contactors are sub-element 3. If in the assessment it has been established that SIL2 shall be used, every individual sub-element in the safety function must fulfill the SIL2 requirements. And the safety function must in its entirety fulfill the SIL2 requirements.

Definition of protective safety in accordance with IEC/EN 62061
"Function of a machine whose failure can result in an immediate increase of the risk(s)"

If the SIL requirements are not fulfilled in any of the sub-elements or by the safety function in its entirety, a re-design must be made.

Finally
This is just a brief introduction to the EN ISO 13849-1 and IEC/EN 62061 standards. You are welcome to contact us for more information and we are happy to guide you in how to apply the standards to our products.

The information given in this document is not intended to replace the standards - we strongly encourage you to purchase the standards if you are working with machine safety.


ABB
PLUTO B20 v2
ABB USR22
Sentry
Jokab Safety
CH1
MODE
CH2

Safety controllers

2–**2** **Introduction and overview**

2–**6** **Programmable safety controller**
Pluto

2–**16** **Safety controller**
Vital

2–**22** **Safety relay**
Sentry

Introduction and overview
Selection guide

The safety controllers from ABB can monitor anything from a single safety function to complete manufacturing lines.

	Pluto	Vital	Sentry
Image			
Type	Programmable safety controller	Safety controller	Safety relay
Description	A cost-effective, powerful and compact programmable safety controller for all types of safety applications.	A configurable safety controller that can monitor all safety devices on smaller machines.	Powerful and easy-to-install safety relays suitable for all common types of safety devices.
Application(s)	Monitoring of multiple safety devices and several safety functions, as well as control of machines and/or processes. Many I/Os and programmable logic.	Monitoring multiple safety devices with all the advantages of the DYNlink system.	Monitoring safety devices with one safety function, as well as expansion of safety outputs, with or without time delay.
Compatible safety devices	All types of conventional safety devices and DYNlink devices	DYNlink devices	All types of conventional safety devices
Advantages	- Easy-to-use while still allowing advanced programming - Free software - Easy system modification - Gateway communication with all main fieldbuses	- Monitor up to 30 sensors in series maintaining Cat. 4/PL e - No programming	- Easy and fast to install with push-in terminals - Universal models for all common applications - Extensive status information - Advanced timer functions - Multireset of up to 10 safety relays

Overview
Selection orientation

Conventional safety devices
By conventional safety devices, we mean safety devices with one or two channels with contacts (e.g. key switches and emergency stop buttons), devices with OSSD outputs (e.g. light guards and Eden OSSD), safety devices with solid state outputs (e.g. safety magnetic sensors) and pressure sensitive devices (e.g. safety mats, safety edges and bumpers).
A safety controller compatible with conventional safety devices can be used with most safety devices on the market, independently of the brand.

The DYNlink solution
The DYNlink solution is a unique ABB Jokab Safety feature allowing to connect safety devices in series and still reach category 4/PL e/SIL 3 with only one channel (instead of two with conventional safety devices). This saves cabling and hardware.
For a small machine, the Vital safety controller can be a very cost effective solution since up to 30 DYNlink devices can be connected to one Vital and still reach category 4/PL e/SIL 3. With conventional safety devices this would require one safety relay per safety device.
When Pluto programmable safety controller is used, only one safety input is necessary for each DYNlink circuit instead of two inputs for a traditional safety device, which means that less I/Os are necessary.
Tina adapters allow to use conventional safety devices in a DYNlink solution and transform between DYNlink signals and conventional safety signals, while maintaining the highest level of safety. This means that most conventional safety devices can be used in a DYNlink solution when used together with a suitable Tina adapter.

Programmable logic
Quite often, there is a need for logic between the different safety functions. For instance: IF (“door A” AND “door B” are open) OR (“door C” is open) THEN “Action 1”.
A logic like this can be hardwired without using programmable safety controllers, but the cabling becomes much more complicated, modifications are time consuming, errors happen more often and are difficult to find.
With a programmable safety controller, the safety devices are simply connected to the safe inputs of the controller and the logic is made in the program of the safety controller. The logic is then easy to modify without changing anything in the cabling. The Pluto Manager programming software allows to test the logic and see on the screen if there are any problems, which means much faster troubleshooting.
Pluto also offers many functions that enables it to do much more than supervising safety functions. It can e.g. control the complete manufacturing process of a smaller machine, thus saving the cost of a standard (non-safety) PLC.

Introduction and overview
Standards

Standards
Some of the more important safety standards to follow when designing safety solutions are:
EN ISO 12100 - Risk assessment
EN ISO 13849 - Performance Level
EN ISO 62061 - SIL
ISO/TR 23849 - Guidance on the use of the PL and SIL standards
EN 60204 - Electrical equipment

Programmable safety controller
Pluto

Pluto is a cost effective, powerful and compact programmable safety controller used in a variety of applications: in large and small systems for process and functional safety.

Pluto can control most types of safety devices on the market, as well as ABB Jokab Safety DYNlink safety devices, analog sensors, encoders, contactors, valves and many more. Programming is done easily in the complimentary software, Pluto Manager.

The models with safety bus communication simplify the design of safety systems, thanks to our All-Master concept. A wide range of gateways allows communication with other networks and also remote monitoring of a Pluto system.



Speed up installation

Great flexibility
Up to 32 Pluto units can exchange data on the same safety bus, and the unique All-Master system allows simple scaling, splitting and modification.

Powerful yet compact
Unexpected features for its size, like real programming and speed monitoring, enables replacement of more complex PLC systems in some applications.

More sensors and less cabling
The DYNlink solution allows series connection of up to 10 safety devices on each input.
StatusBus and light button feature also reduces cabling to a minimum.

Optimum interface

Programming software free of charge
Pluto Manager is an easy to use PC based programming software provided free of charge.

Easy programming
Ready-made TÜV approved function blocks for safety functions make it easy to reach PL e/SIL3. Ladder logic and text programming allow the design of more advanced functions and the control of complete machines.

Communication with external networks
Pluto gateways provide a two-way communication between the Pluto safety bus and other field buses.

Continuous operation

Easy modification
Easy and quick replacement of units without any configuration.

Flexible monitoring
Online monitoring from any Pluto in the system and remote monitoring and control with an Ethernet gateway.

Features

Pluto

I/Os

Failsafe inputs (I) are used to connect the safety devices to be monitored. Some of them can be used as analog inputs and counter inputs. The choice is made in the Pluto program when the I/Os are configured. Depending on the model, the analog inputs can be low resolution 0-27 V or high resolution 0-10 V/4-20 mA. The fast counter inputs can handle frequencies up to 14 kHz.

Failsafe inputs/non-failsafe outputs (IQ) are terminals that can be used as failsafe inputs or communication outputs (non-failsafe). The choice is made in the Pluto program when the I/Os are configured. A specific configuration is “light button” which means that both the contact and the LED indicator of an illuminated push-button are connected to only one IQ, thus saving one I/O.

Failsafe outputs (Q) are individually safe and independently programmable outputs. There are both relay and transistor outputs. The transistor outputs deliver a negative voltage (-24 VDC) that facilitates the detection of a short circuit with other voltage potentials and increases safety. The transistor outputs are primarily intended for electromechanical components such as contactors and valves.

DYNlink solution

The DYNlink circuit is a unique solution that allows up to 10 DYNlink devices to be connected in series to a Pluto input while still reaching up to Cat. 4/PL e/SIL3. This saves inputs and cabling, since to reach the same level with standard two-channel safety devices, two inputs are necessary and series connection is not possible.
The DYNlink solution checks the signal 200 times/second and a fault such as a short circuit will be detected before any safety device is used.
Examples of DYNlink devices are Eden and Smile Tina. Most two-channel safety devices can be connected to the DYNlink solution using Tina adapters.

StatusBus functionality

The StatusBus functionality is available with some DYNlink devices and allows to collect the status of each individual safety device, even when connected in series. A single input on Pluto can collect the status of up to 30 safety devices. The devices are connected using standard cable and M12-5 connectors. No specific bus cable or extra communication module is necessary. All Pluto models offer the StatusBus functionality.

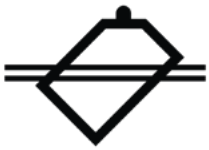

StatusBus logotype

Safety bus with All-Master function

The unique All-Master system allows simple scaling, splitting and modification of the safety system.

In a traditional safety PLC network, there is one Master and additional Slave units. But for Plutos connected to a safety bus, all units are Masters and make their own decisions, while still having the possibility to listen to what is happening to the other Plutos on the safety bus. This enables great flexibility when it comes to modification of the safety system. It also enables very simple replacement of a broken Pluto, since all Plutos have a copy of the application software of all other Plutos on the safety bus stored locally. If the replacement Pluto is given the same ID as the broken Pluto (using IDFIX), the software is downloaded from the safety bus with a simple button on the front of Pluto.

Up to 32 Pluto units can be connected to the Pluto safety bus. The Pluto S20 and S46 are stand-alone models and cannot be connected to the Pluto safety bus. All other models have bus functionality. The Safety bus functionality is necessary in order to use a Pluto gateway.

Features
Pluto

Pluto Manager
Pluto Manager is the programming software for Pluto, downloaded free of charge from our website http://new.abb.com/low-voltage/products/safety-products/programmable-safety-controllers/pluto
An update function in Pluto Manager helps you to always have the latest version installed as long as you have an Internet connection. Pluto Manager is a user friendly PC software that allows a simple configuration of the Pluto I/Os and programming in ladder logic and with TÜV approved function blocks.

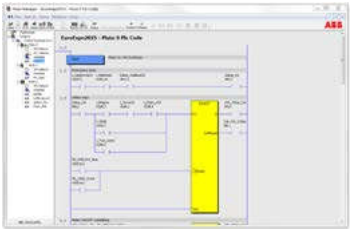

Examples of what the available function blocks can handle:
- Two-channel safety devices, with or without Reset and Monitoring.
- Single channel functions with Reset.
- Muting functions
- Encoders and counters
- Communication with Gateways and StatusBus

Examples of ladder logic functions provided:
- Boolean instructions, Edge/inverted edge detection, Latch function, Toggle
- Timers
- Addition, Subtraction, Multiplication, Division
- Remanent memories
- Registers: 16 and 32 bit
- Sequence programming
- Option handling
- Online monitoring

In Pluto Manager there is a unique Option handling function suitable for series production of machines with different customer options. All versions of a machine type can have the same PLC program. To handle the different customer options, check boxes are used to set memories that activate the different functions of the code.

Current monitoring
Pluto A20 has a special current monitoring function. The function is mainly used to check if the connected muting lamps are working.

Remote monitoring and control
Remote monitoring allows the connection to a remote Pluto system via the Internet and an Ethernet gateway. Pluto Manager is used for the monitoring.
This function can be used for:
- Support of local maintenance personnel during trouble-shooting
- Regular monitoring of the status of the machine or process
- Follow-up of operational data like number of cycles/day or runtime.

Pluto Manager also offers remote control of a Pluto system using the Internet and an Ethernet gateway.
With the remote control function it is possible to:
- Download a program from PC to the remote Pluto
- Configure addressing of AS-i and StatusBus slaves, write IDFIX code

The security of the remote control function is guaranteed by use of the K-button on Pluto. A change in a remote Pluto system cannot be made without a person at the remote Pluto confirming the action by pressing the K-button.

Configuration of the gateway itself, e.g. switching remote control on/off, can only be made via the programming port on the gateway and not via the Ethernet port.

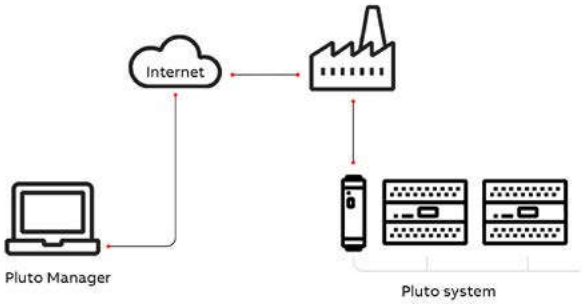

Accessories

Pluto

Pluto gateways

Pluto gateways provide two-way communication between the Pluto safety bus, i.e. all the Pluto units connected to it, and other field buses. Several models are available for the most common field buses.
Ready-made function blocks in Pluto Manager facilitate the communication. A gateway can be located anywhere on the Pluto safety bus.



Pluto safe encoders

Rotary absolute encoders can be used for safe position determination.
Our safe encoders are intended to be connected to the Pluto safety bus. They are available in single and multi-turn versions, with shaft or hollow shaft. Up to 16 absolute encoders can be connected to a Pluto safety bus. In Pluto Manager, specific function blocks make it easy to read and evaluate the values of two encoders forming a PL e/SIL3 solution. Apart from position, the speed values are available which means that also zero speed and overspeed can be monitored.

Examples of applications are gantry robots, industrial robots, and also eccentric shaft presses, where the encoders can replace existing cam mechanisms.



Operator panels

An operator panel can be connected to the programming port of Pluto with a specific cable and communicate with Pluto in MODBUS ASCII. We recommend the ABB CP600 series operator panels that offer the appropriate communication driver.
An operator panel can also communicate with Pluto via a GATE-MT gateway.



Ordering information

Pluto



Pluto S20 v2



Pluto A20 v2



Pluto D45

Pluto ordering table

Pluto is available in different models depending on the needs of your application.
Optional features includes bus communication, high resolution analog inputs and current monitoring.

Safety bus	Failsafe outputs [a]	Failsafe inputs (max) [b]	Analog inputs (max) [b]	Fast counter inputs (max) [b]	StatusBus inputs (max) [b]	Non failsafe outputs (max) [b]	Width mm	Type	Order code
No	4	16	1 [c]	-	4	8	45	Pluto S20	2TLA020070R4700
	6	40	3 [c]	-	4	16	90	Pluto S46	2TLA020070R1800
Yes	-	22	1 [c]	-	4	8	45	Pluto B22 [e]	2TLA020070R4800
	2	4	-	-	2	2	45	Pluto O2 [f]	2TLA020070R8500
	4	16	1 [c]	-	4	8	45	Pluto A20 [g]	2TLA020070R4500
								Pluto B20	2TLA020070R4600
			4 [d] + 1 [c]	-	4	8	45	Pluto D20	2TLA020070R6400
	6	40	3 [c]	-	4	16	90	Pluto B46	2TLA020070R1700
		39	8 [d]	4	4	15	90	Pluto D45	2TLA020070R6600

a) Failsafe outputs

2 failsafe outputs:
- 2 independent individually safe potential free relay outputs (Q0 and Q1) with 3 contacts each

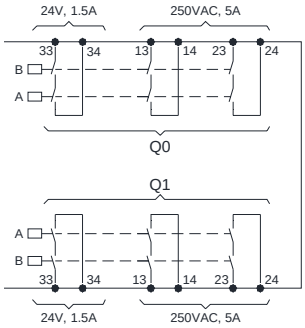

4 failsafe outputs:
- 2 independent individually safe potential free relay outputs (Q0 and Q1)
- 2 independent individually safe transistor outputs (-24 VDC) (Q2 and Q3)

6 failsafe outputs:
- 2 independent individually safe potential free relay outputs (Q0 and Q1)
- 2 independent individually safe potential free relay outputs with common supply (Q4 and Q5)
- 2 independent individually safe transistor outputs (-24 VDC) (Q2 and Q3)

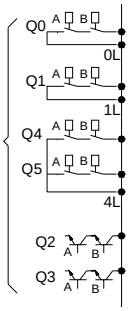

b) -The number of failsafe inputs available decreases with the number of used non-failsafe outputs, analog inputs, fast counter inputs and StatusBus inputs.
-The number of analogue inputs available decreases with the number of used fast counter inputs.
-The number of non-failsafe outputs available decreases with the number of StatusBus inputs used.
Check the Pluto hardware manual for more information.

c) 0-27 V analog inputs

d) 0-10 V/4-20 mA (high resolution) analog inputs

e) Expansion model with failsafe inputs and no failsafe outputs.

f) Expansion model with 2 failsafe outputs with 3 contacts each. Also possible to use as stand-alone unit.

g) Model with current monitoring

Ordering information

Pluto accessories



2TLC172609F0201

IDFIX-R



2TLC172765F0201

IDFIX-RW



2TLC172607F0201

IDFIX-DATA



2TLC172611F0201

IDFIX-PROG 2k5



2TLC172613F0201

IDFIX-PROG 10k



FIXA



2TLC172624F0201

R120 Resistor

IDFIX identifiers

IDFIX is an identification circuit that is connected to Pluto. It must be used:

- when several Pluto are connected to the Pluto Safety bus (IDFIX-R or IDFIX-RW)
- to get the possibility to replace a stand-alone Pluto with a new one without the need of a PC (IDFIX-PROG stores the Pluto program)

Description	Type	Order code
Pre-programmed unique identification number.	IDFIX-R	2TLA020070R2000
Programmable identification number, i.e. the user can choose identification number.	IDFIX-RW	2TLA020070R2100
Programmable identification number and storage of AS-i safety codes.	IDFIX-DATA	2TLA020070R2300
Storage of the Pluto program, 2.5 Kbyte. Especially useful for stand-alone Pluto.	IDFIX-PROG 2k5	2TLA020070R2400
Storage of the Pluto program, 10 Kbyte. Especially useful for stand-alone Pluto.	IDFIX-PROG 10k	2TLA020070R2600

Pluto cables and connection accessories

Description	Type	Order code
Pluto programming and on-line monitoring cable. For a PC serial port, 9-pole D-sub connector.	Pluto cable serial	2TLA020070R5600
Pluto programming and on-line monitoring cable. For a PC USB port.	Pluto cable USB	2TLA020070R5800
Cable for connecting a HMI-panel to the Pluto programming port. Connector on HMI-side: 15-pole D-sub. On Pluto side: 90 degrees angled Modbus contact.	Pluto cable HMI	2TLA020070R5700
Cable for connecting HMI-panel ABB CP400 to Pluto programming port. Connector on HMI-side: 9-pole D-sub.	Pluto cable CP400	2TLA020070R6700
Cable for connecting HMI-panel ABB CP600 to Pluto programming port. Connector on HMI-side: 9-pole D-sub.	Pluto cable CP600	2TLA020070R6900
Bus cable for Pluto safety bus, 2 x 0.75 mm^2. Ordered by meter, cut to size. Minimum order length 10 m.	PCABLE-000	2TLA020070R6800
Bus cable for Pluto safety bus, 2 x 0.75 mm^2. 50-meter ring.	PCABLE-050	2TLA020070R6805
Bus cable for Pluto safety bus, 2 x 0.75 mm^2. 100-meter ring.	PCABLE-100	2TLA020070R6810
Bus cable for Pluto safety bus, 2 x 0.75 mm^2. 500-meter drum.	PCABLE-500	2TLA020070R6850
Bus cable for Pluto safety bus, 2 x 0.75 mm^2. Halogen free. Ordered by meter, cut to size. Minimum order length 10 m.	PCABLE-000-HF	2TLA020070R8600
Bus cable for Pluto safety bus, 2 x 0.75 mm^2. Halogen free. 50-meter ring.	PCABLE-050-HF	2TLA020070R8605
Bus cable for Pluto safety bus, 2 x 0.75 mm^2. Halogen free. 100-meter ring.	PCABLE-100-HF	2TLA020070R8610
Bus cable for Pluto safety bus, 2 x 0.75 mm2. Halogen free. 500-meter drum.	PCABLE-500-HF	2TLA020070R8650

Other accessories

Description	Type	Order code
Set of function blocks for mechanical presses.	Pluto press block	2TLA020070R4100
Smile reset button for light button function with M12-5 connector.	Smile 11 RB	2TLA030053R0100
Handheld terminal for StatusBus. Used for e.g. addressing and test. Connection to PC via USB-micro cable	FIXA	2TLA020072R2000
Terminating resistor for Pluto safety bus. Necessary for each stand-alone Pluto and on the Pluto units at each end of the Pluto safety bus. Should be removed from the other Pluto units.	R120 Resistor	2TLA020070R2200

Pluto spare parts (included when ordering a Pluto)

Description	Type	Order code
Contact block for safety relays and Pluto. 7 poles. Grey.	Contact block 7 grey	2TLA081200R1500

Ordering information

DYNlink solution



2TLC172453F0201

Tina 2A



2TLC172457F0201

Tina 2B



2TLC172459F0201

Tina 3A



2TLC172469F0201

Tina 7A



2TLC172473F0201

Tina 10A



2TLC172475F0201

Tina 10B



2TLC172477F0201

Tina 10C



2TLC172467F0201

Tina 6A

Tina adaptation units to DYNlink

The Tina devices adapt the DYNlink signals from Pluto to safety components with mechanical contacts, such as E-stops, switches and light beams/curtains with dual outputs. Tina is available in several versions depending on the type of safety component that is connected to the DYNlink solution. Also available is connector blocks and a blind plug.

Type of safety device	Type of connection to the DYNlink loop	Description	Type	Order code
Devices with positively driven force-guided contacts like E-stop buttons and key switches	Via the device connection	Mounted directly on the device enclosure to a M20 cable entry.	Tina 2A	2TLA020054R0100
		Placed inside the safety device enclosure	Tina 2B	2TLA020054R1100
	M12-5 male connector	Mounted directly on the device enclosure to a M20 cable entry.	Tina 3A	2TLA020054R0200
	M12-5 male connector with extra conductor for the supply of the safety device	Two circuits and with supply voltage for the safety sensor. Connects to a M20 cable entry.	Tina 3Aps	2TLA020054R1400
	Removable terminal blocks	Mounted on a DIN rail in the electrical cabinet. Note that the connected safety device(s) must be mounted on the same cabinet.	Tina 7A	2TLA020054R0700
Devices with OSSD outputs like Orion light guards	M12-5 male connector	Adaptation of OSSD to DYNlink. M12-8 connector for OSSD and M12-5 for DYNlink.	Tina 10A v2	2TLA020054R1210
		Adaptation of OSSD to DYNlink with possibility to connect a local reset button. M12-8 for OSSD and M12-5 for DYNlink and reset.	Tina 10B v2	2TLA020054R1310
		Adaptation of OSSD to DYNlink with possibility to power the transmitter. M12-8 connector for OSSD and M12-5 for DYNlink and power.	Tina 10C v2	2TLA020054R1610
Safety mats, edges and bumpers with short-circuit detection	M12-5 male connector	Short-circuit detection and adaptation to DYNlink.	Tina 6A	2TLA020054R0600

Connection blocks for serial connection of DYNlink devices (or devices with Tina adapter)

Description	Type	Order code
Connection block for serial connection of up to 4 DYNlink devices with M12-5 connectors	Tina 4A	2TLA020054R0300
Connection block for serial connection of up to 8 DYNlink devices with M12-5 connectors	Tina 8A	2TLA020054R0500
Connection block for serial connection of 2 DYNlink devices with M12-5 connectors	Tina 11A	2TLA020054R1700
Connection block for serial connection of 2 DYNlink devices with M12-8 connectors, e.g. Magne.	Tina 12A	2TLA020054R1800

Blind plug to complete the serial connection on a connection block

All M12 connectors on Tina 4A or Tina 8A must be connected to a safety device or a Tina 1A. For example, if only 6 devices are connected to a Tina 8A, two Tina 1A are necessary.

Description	Type	Order code
Tina 1A is a blind plug connected to the unused M12 connectors of the connection blocks Tina 4A and Tina 8A.	Tina 1A	2TLA020054R0000

M12 Y-connectors

Description	Type	Order code
M12 Y-connector for series connection of DYNlink devices such as Eden, Smile, Inca and Tina.	M12-3A	2TLA020055R0000
M12 Y-connector for parallel connection of 2 DYNlink devices.	M12-3B	2TLA020055R0100
M12 Y-connector for the connection of 2 DYNlink devices or one DYNlink and one light button to Pluto safety PLC with only one cable.	M12-3E	2TLA020055R0200
M12 Y-connector for series connection of DYNlink devices with the StatusBus function.	M12-3S	2TLA020055R0600

Ordering information
Accessories



GATE-C2



GATE-EC



RSA 597



RSA 698

Pluto gateways
With the use of a gateway, Pluto can communicate with other control systems and form a part of a larger network. The gateway models GATE-D2 and C2 can also be used as an extension of the safety bus cable to extend the Pluto network.

Fieldbus	Ethernet	Type	Order code
CANopen		GATE-C2	2TLA020071R8100
DeviceNet		GATE-D2	2TLA020071R8200
PROFIBUS-DP		GATE-P2	2TLA020071R8000
EtherCAT	x	GATE-EC	2TLA020071R9100
Ethernet/IP	x	GATE-EIP	2TLA020071R9000
Modbus TCP	x	GATE-MT	2TLA020071R9400
PROFINET	x	GATE-PN	2TLA020071R9300
SERCOS III	x	GATE-S3	2TLA020071R9200

For more information, see the gateway manuals:
Pluto gateways 2TLC172009M0210
Pluto Ethernet gateways 2TLC172285M0203

Pluto safe encoders
The safe encoders can be used together with Pluto to safely determine the position of machine movements.

Function	Shaft	Shaft diameter (mm)	Type of connection	Type	Order code
Single-turn	Solid	10	Connector male 12 poles	RSA 597 connector	2TLA020070R3600
		6	1.5 m cable	RSA 597 1.5 m cable	2TLA020070R3300
	Hollow	12	2 m cable	RHA 597 2 m cable	2TLA020070R3400
			10 m cable	RHA 597 10 m cable	2TLA020070R5900
Multi-turn	Solid	6	M12 connector	RSA 698 6 mm solid	2TLA020071R7800
		10	M12 connector	RSA 698 10 mm solid	2TLA020070R3700
	Holow	12	M12 connector	RHA 698 hollow	2TLA020071R7900

For more information, see the manual:
Pluto safe encoders 2TLC172006M0206

Pluto safe encoders accessories

Description	Type	Order code
Female 12 pole connector to be used with absolute encoder “RSA 597 connector”. Connector to be mounted on the cable.	Connector for absolute encoder	2TLA020070R3900
M12 plug with Pluto safety bus termination resistor. To be used when the encoder is at one end of the Pluto safety bus.	M12-CANend	2TLA020061R0300



CP604

Operator panels
An operator panel (also called HMI) can be connected to the Pluto programming port (on the Pluto front) with a special cable and communicate with Pluto using MODBUS ASCII. We recommend the ABB CP600 series that offer the appropriate communication driver. An operator panel can also communicate with Pluto via a GATE-MT gateway.

Description	Type	Order code
Operator panel, 4.3” touch screen, 480 x 272 pixels	CP604	1SAP504100R0001

For more sizes and version, see: http://new.abb.com/plc/control-panels

Technical data

Pluto

Technical data

Approvals			
Conformity	CE 2006/42/EC - Machinery 2014/30/EU - EMC 2011/65/EU - RoHS EN ISO 13849-1:2015, IEC 62061:2015+Corr.1:2015, EN 61496-1:2013(in extracts), EN 574:1996+A1:2008(in extracts), EN 692, EN 60204-1:2006+A1:2009+AC:2010, EN 50178:1997, EN 61000-6-2, EN 61000-6-4, EN 61000-4-1...6, IEC 61508:2010, IEC 61511-1, EN 50156-1, EN 50156-2:2015, ISO 13851:2002 (in extracts)		
Functional safety data			
		PFH_D Failsafe relay outputs	PFH_D Failsafe transistor outputs
EN 61508:2010	SIL3	2.00×10^{-9}	1.5×10^{-9}
EN 62061:2005+A1:2013	SILCL3	2.00×10^{-9}	1.5×10^{-9}
EN ISO 13849-1:2008	PL e/Cat.4	2.00×10^{-9}	1.5×10^{-9}
Electrical data			
Electrical insulation	Category II in accordance with IEC 61010-1		
Operating voltage	+24 VDC ± 15%		
Failsafe outputs Q	Transistor, -24 VDC, 800 mA		
Q2, Q3		Pluto O2	Pluto O2
Q0, Q1, (Q4, Q5)	Relay outputs AC-12: 250 V / 1.5 A VAC-15: 250 V /1.5 A VDC-12: 50 V /1.5 A DC-13: 24 V / 1.5 A	Relay outputs AC-12: 250 V / 5 A AC-15: 250 V / 3 A DC-12: 60 V / 5 A DC-13: 24 V / 3 A	Relay outputs (33-34) AC-12: 24 V / 1.5 A AC-15: 24 V / 1.5 A DC-12: 24 V / 1.5 A DC-13: 24 V / 1.5 A
Installation	35 mm DIN rail		
Ambient temperature	–10 ˚C to +50 ˚C		
Pluto safety bus			
Max. number of Pluto units	32		
Cable length	Up to 600 m		

More information

For more information, e.g. the complete technical information, see product manual:
Pluto hardware manual 2TLC172001M0211

Connection diagrams

For Pluto connection diagrams please see https://library.abb.com/

Dimension drawings

Pluto

Single size

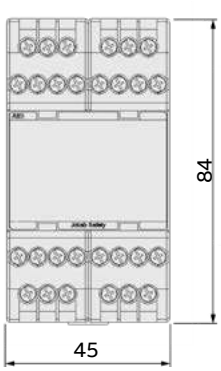

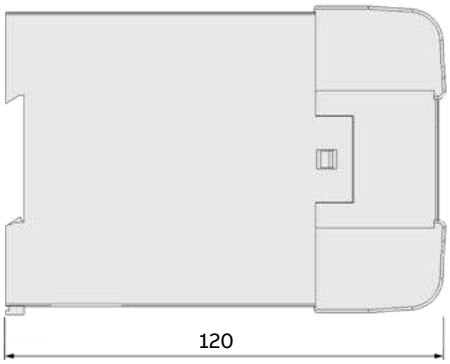

Double size

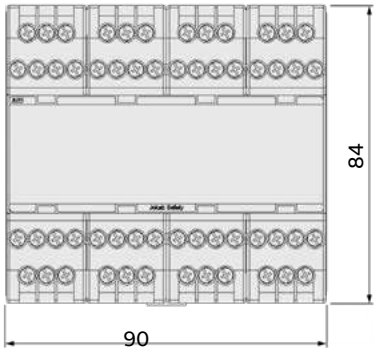

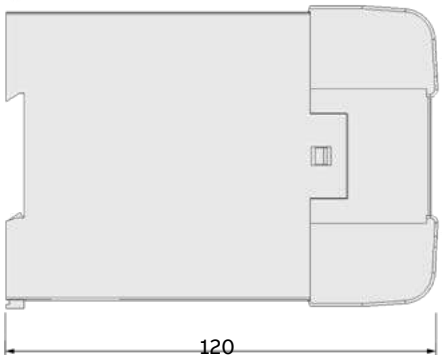

All dimensions in mm

Safety controller
Vital

Vital is a configurable safety controller that does not require programming. It uses the DYNlink system, which allows up to 30 safety devices to be connected in series to the same circuit, while achieving PL e.

This enables a single Vital to supervise all safety functions on many machines that otherwise would have required a programmable safety controller or multiple safety relays.

Vital is also commonly used to supervise all emergency stops for larger machine lines.

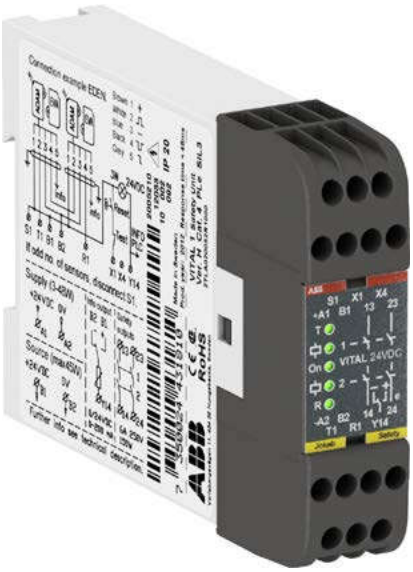

Speed up your projects

Easy connection
Reduced installation and engineering time thanks to simple installation with serial connection using M12 connectors.

No programming required
The use of only one safety module without any programming simplifies engineering, commissioning and replacement.

Less components
Significantly less components needed to achieve PL e/SIL 3.

Continuous operation

LED diagnostics
Integrated LED diagnostics reduces down time when troubleshooting.

Detachable connection blocks
Detachable connection blocks simplify replacement.

Exchange without configuration
The configuration is made with jumpers in the detachable connection blocks. In case of exchange, the new unit automatically gets the correct configuration.

Safety and protection

Easy to reach highest safety level
The DYNlink solution makes it possible to maintain the highest level of safety with up to 30 sensors connected in series.

Extensive fault detection
The DYNlink solution enables unique fault detection features and prevents 2-channel faults.

Applications and features
Vital

Applications

Vital safety controller excels at supervising multiple safety devices on the same machine, since up to 30 safety devices can be connected in series to the same input while achieving up to PL e.
Typical applications are machines with multiple doors/hatches or emergency stop buttons.

Features

DYNlink
The DYNlink circuit is a unique solution that uses one single channel to achieve up to Cat. 4/PL e. Vital sends out a square wave signal that is inverted by each safety device. A connection between B1 and S1 sets if Vital should receive a non-inverted signal, i.e. an even number of devices are connected (no shunt indicates an odd number). Vital checks the returning signal 200 times/second and a fault such as a short circuit will be detected before any safety device is used.

Vital can only be used with DYNlink safety device, such as Eden DYN, and devices with a Tina adapter.

Ordering information

Vital



Vital 1

Description

DYNlink circuits	Maximum DYNlink devices	Safe outputs	Type	Order code
1	30	2 NO	Vital 1	2TLA020052R1000

Tina adaptation units to DYNlink

The Tina devices adapt the DYNlink signals from Pluto to safety components with mechanical contacts, such as E-stops, switches and light beams/curtains with dual outputs. Tina is available in several versions depending on the type of safety component that is connected to the DYNlink solution. Also available is connector blocks and a blind plug.



Tina 2A



Tina 2B



Tina 3A

Type of safety device	Type of connection to the DYNlink loop	Description	Type	Order code
Devices with positively driven force-guided contacts like E-stop buttons and key switches	Via the device connection	Mounted directly on the device enclosure to a M20 cable entry.	Tina 2A	2TLA020054R0100
		Placed inside the safety device enclosure	Tina 2B	2TLA020054R1100
	M12-5 male connector	Mounted directly on the device enclosure to a M20 cable entry.	Tina 3A	2TLA020054R0200
	M12-5 male connector with extra conductor for the supply of the safety device	Two circuits and with supply voltage for the safety sensor. Connects to a M20 cable entry.	Tina 3Aps	2TLA020054R1400
	Removable terminal blocks	Mounted on a DIN rail in the electrical cabinet. Note that the connected safety device(s) must be mounted on the same cabinet.	Tina 7A	2TLA020054R0700
Devices with OSSD outputs like Orion light guards	M12-5 male connector	Adaptation of OSSD to DYNlink. One M12-5 and one M12-8 connector.	Tina 10A v2	2TLA020054R1210
		Adaptation of OSSD to DYNlink with possibility to connect a local reset button. M12-8 connector for OSSD. M12-5 connector for DYNlink and reset button.	Tina 10B v2	2TLA020054R1310
		Adaptation of OSSD to DYNlink with possibility to power the transmitter. M12-8 connector for OSSD. M12-5 for DYNlink and power.	Tina 10C v2	2TLA020054R1610
Safety mats, edges and bumpers with short-circuit detection	M12-5 male connector	Short-circuit detection and adaptation to DYNlink.	Tina 6A	2TLA020054R0600



Tina 7A

Connection blocks for serial connection of DYNlink devices (or devices with Tina adapter)

Description	Type	Order code
Connection block for serial connection of up to 4 DYNlink devices with M12-5 connectors	Tina 4A	2TLA020054R0300
Connection block for serial connection of up to 8 DYNlink devices with M12-5 connectors	Tina 8A	2TLA020054R0500
Connection block for serial connection of 2 DYNlink devices with M12-5 connectors	Tina 11A	2TLA020054R1700
Connection block for serial connection of 2 DYNlink devices with M12-8 connectors, e.g. Magne.	Tina 12A	2TLA020054R1800



Tina 10A



Tina 10B



Tina 6A

Blind plug to complete the serial connection on a connection block

All M12 connectors on Tina 4A or Tina 8A must be connected to a safety device or a Tina 1A. For example, if only 6 devices are connected to a Tina 8A, two Tina 1A are necessary.

Description	Type	Order code
Blind plug connected to unused M12 connectors of the connection blocks Tina 4A and Tina 8A.	Tina 1A	2TLA020054R0000

M12 Y-connectors

Description	Type	Order code
M12 Y-connector for series connection of DYNlink devices such as Eden, Smile, Inca and Tina.	M12-3A	2TLA020055R0000
M12 Y-connector for parallel connection of 2 DYNlink devices.	M12-3B	2TLA020055R0100
M12 Y-connector for the connection of 2 DYNlink devices with only one cable.	M12-3E	2TLA020055R0200
M12 Y-connector for series connection of DYNlink devices with the StatusBus function.	M12-3S	2TLA020055R0600

Technical data
Vital

Technical data

Approvals	TÜV NORD
Conformity	CE 2006/42/EC - Machinery 2014/30/EU - EMC 2011/65/EU - RoHS EN ISO 12100:2010, EN ISO 13849-1:2015, EN 62061:2005+A1:2013, EN 60204-1:2006+A1:2009+Cor.:2010, EN 60664-1:2007, EN 61000-6-2:2016, EN 61000-6-4:2007, EN 61496-1:2013
Functional safety data	
EN 61508:2010	SIL3
EN 62061:2005+A1:2013	SILCL3
EN ISO 13849-1:2008	PL e, Cat. 4
PFH_D Relay output	2.74×10^{-8}
Electrical data	
Power supply	+24 VDC ± 15%
AC-1	250 VAC / 6 A / 1500 VA
AC-15	240 VAC / 2 A
DC-1	24 VDC / 6 A / 150 W
DC-13	24 VDC / 1 A
Number of sensors	
Max. number of Eden DYN or Tina units per input	30
Total max. cable length (depending on the number of Eden/Tina units)	1000 m
Operating temperature	-10 °C to +55 °C

More information
Fore more information, e.g. the complete technical information, see product manual for:

Vital 1: 2TLC172156M0201

Connection diagrams
For Vital connection diagrams please see https://library.abb.com/

Dimension drawings

Vital

Vital 1

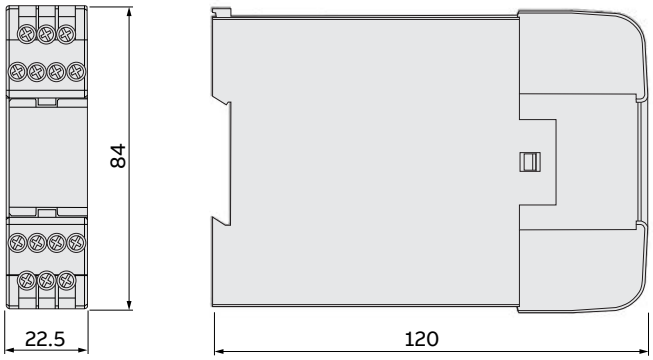

Safety relay
Sentry

The Sentry safety relays are powerful and easy to use safety relays, suitable for all common types of safety applications.

The Sentry series contains basic models for simple applications and easy output expansion, as well as highly flexible models with extremely accurate timer functions.

Sentry safety relays are used in both simple and more advanced safety solutions when safety devices need to be monitored according to the requirements of functional safety standards.



Continuous operation

LEDs and display
LEDs in 3 colours allow for more status messages and simplify troubleshooting. Models with display offer preset configurations and extensive fault information.

Advanced timer functions
Timer functions with an accuracy of ± 1% minimize unnecessary downtime.

Multi-reset
The multi-reset function enables reset of up to 10 Sentry safety relays using just one reset button.

Speed up your projects

Twice as fast to install
Push-in terminals are twice as fast compared to regular spring loaded connectors.

Handles ferruled and rigid cables
Both ferruled and rigid cables are easy to just push into the push-in terminals by hand.

No tools required for installation
No tools are required for connecting a cable in the push-in terminals. Just use the cable to push into the opening.

Easy to install

Detachable terminal blocks
Detachable terminal blocks speed up connection and replacement.

Switch for reset selection
Manual or automatic reset easily selectable by switch.

Powerful outputs
Powerful outputs allow to drive larger contactors and simplify installation by saving the use of an intermediary contactor.

Applications
Sentry

Monitoring of safety devices
Sentry safety relays make it easy to reach the required level of safety when monitoring safety devices like emergency stop buttons, door switches, light guards, etc.

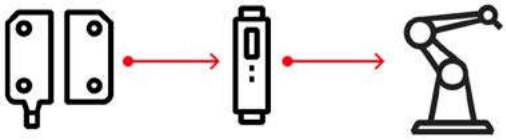

Expansion of safety outputs
Sentry expansion modules are used to increase the number of safety outputs of a safety control module in order to control more machinery.

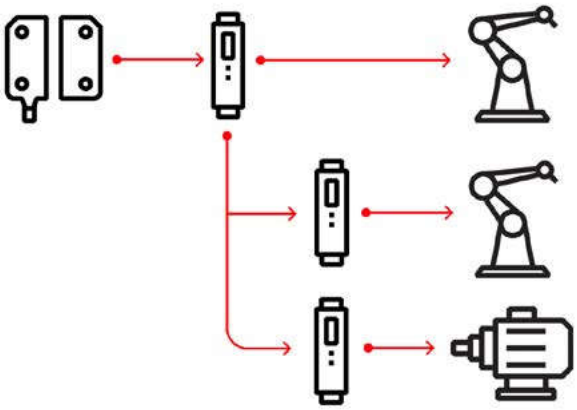

Features
Sentry

Timer functions with an accuracy of ± 1%
Several timer functions are available: On/Off-delay, time bypass and time reset.
On/Off-delay are used to postpone the activation/deactivation of the safety outputs with a preset time delay. This is used in e.g. Category 1 stops.
Time bypass activates the safety outputs for a maximum predefined time when the safety inputs are closed. Inching is an example of application.
Time reset activates the safety outputs for a maximum predefined time when the safety inputs are opened. Pre-reset is an example of application.
An accuracy of ± 1% allows a very precise time to be set in order to increase safety and minimize unnecessary downtime.

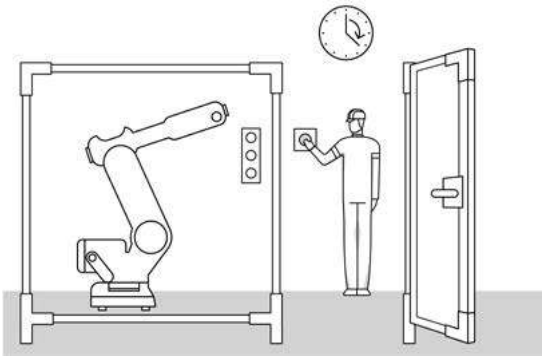

Push-in terminals
All models are available with push-in terminals, enabling a fast and tool-free installation.

Multi-reset
The multi-reset function enables reset of up to 10 Sentry safety relays using just one reset light-button. This simplifies connection, minimizes cabling and unnecessary downtime. The multi-reset function is available for all +24 VDC Sentry models offering manual reset.

Light-button function
The light-button function is used for the multi-reset function, but can also be used for a standard reset button.
The function of the LED in the light-button is the following:
on - at least one input is not accepted
flashing - all inputs are accepted, reset possible
off - all inputs accepted, reset performed, outputs active

Note: if an input is accepted it means that the door is closed, the light curtain is not interrupted, etc.



Configurable models with display
The models with display are configurable and the user can choose between preset configurations and a custom configuration that can be protected by password.

Faster troubleshooting with display
The display minimizes troubleshooting by giving extensive information about internal faults, I/O faults, system faults, function faults and a log of the last 10 errors.



Switch for selection of the reset function
All models can be used in automatic reset and some models allow to choose manual reset, either by switch or by configuration, which simplifies connection. In order to prevent mistakes, it is not possible to change reset function during operation by just flipping the switch.



Powerful outputs
The outputs have a switching capacity of up to 6A DC-13. This allows Sentry to drive larger contactors and saves the use of an intermediary contactor.

Delayed outputs
Some Sentry models have delayed outputs in order to e.g. give a machine time to apply breaking force before power is disconnected.
For models with 2 NO + 2 NO outputs, it is only the second pair of NO outputs that is delayed.
For models with 3 NO + 1 NC, all outputs are delayed.

Single function or universal models
Sentry **SSR** models are single function safety relays designed for a specific application such as 1 and 2 channel devices, OSSD devices or two-hand devices.
Sentry **USR** models are universal safety relays. They are capable of handling most types of applications and safety devices, i.e. 1 and 2 channel devices, OSSD-devices, two-hand devices and contact mats/bumpers/edges. This means that only one type of relay is necessary as a spare, which reduces stock and saves warehouse space.

Ordering information

Sentry



BSR10



SSR32



USR10



S30A



S30C

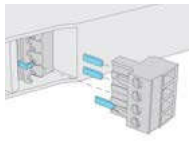

S30B

Ordering details

Expansion	Safety devices						Test/ Reset		Safety relay outputs				Timer function			Feature	Power supply		Type P=push-in terminals	Order code
Expansion of safety controller outputs	1 channel	2 channels with equivalent contacts	2 channels with antivalent contacts	OSSD outputs / PNP outputs	Contact mats, bumpers and safety edges [c]	Two-hand devices	Manual reset (all models have auto reset)	Start/Test	3 NO + 1 NC	4 NO	2 NO + 2 delayed/delayable NO	4 NO + 1 NC	Off-delay 0.5 s	Off-delay 1.5 s	Advanced timer functions 0 – 999 s [d]	Configuralble with display	85-265 VAC / 120-375 VDC	+24 VDC		
a)	•	b)						•	•									•	BSR10 BSR10P	2TLA010040R0000 2TLA010040R0001
a)	•	b)						•		•								•	BSR11 BSR11P	2TLA010040R0200 2TLA010040R0201
a)												•						•	BSR23 [e] BSR23P [e]	2TLA010041R0600 2TLA010041R0601
•	•	•		•			•		•									•	SSR10 SSR10P	2TLA010050R0000 2TLA010050R0001
•		•					•		•								•		SSR10M SSR10MP	2TLA010050R0100 2TLA010050R0101
						•	•		•									•	SSR20 SSR20P	2TLA010051R0000 2TLA010051R0001
						•	•		•								•		SSR20M SSR20MP	2TLA010051R0100 2TLA010051R0101
	•	•		•			•				•		•					•	SSR32 SSR32P	2TLA010052R0400 2TLA010052R0401
	•	•		•			•				•			•				•	SSR42 SSR42P	2TLA010053R0400 2TLA010053R0401
•	•	•		•					•				•	•	•	•		•	TSR10 TSR10P	2TLA010060R0000 2TLA010060R0001
•	•	•		•					•				•	•				•	TSR20 TSR20P	2TLA010061R0000 2TLA010061R0001
•		•							•				•	•			•		TSR20M TSR20MP	2TLA010061R0100 2TLA010061R0101
	•	•	•	•	•	•	•		•				•	•	•	•		•	USR10 USR10P	2TLA010070R0000 2TLA010070R0001
	•	•	•	•	•	•	•				•		•	•	•	•		•	USR22 USR22P	2TLA010070R0400 2TLA010070R0401

a) These models can also be used for expansion of Pluto safe transistor outputs (-24 VDC)
b) No monitoring of two-channel fault, i.e. max Category 3 without fault exclusion.
c) The safety relay detects a short-circuit, not a change in resistance.
d) Off-delay, On-delay, Time bypass or Time reset.
e) BSR23 must be monitored by another device in order to reach higher than Category 1/PL c according to EN ISO 13849-1, for example a safety relay, a safety PLC or an Orion light guard (EDM function).

Accessories

Description	Type	Order code
Screw terminal block for Sentry safety relays. One piece.	S30A	2TLA010099R0000
Push-in terminal block for Sentry safety relays. One piece.	S30C	2TLA010099R0001
Coding kit for terminal blocks. One kit for one Sentry relay.	S30B	2TLA010099R0100

Technical data

Sentry

Technical data

Approvals				
Conformity	CE 2006/42/EC - Machinery 2014/30/EU - EMC 2011/65/EU - RoHS EN ISO 12100:2010, EN ISO 13849-1:2015, EN 62061:2005+A2:2015, EN 60204-1:2006+A1:2009, EN 60664-1:2007, EN 61000-6-2:2005, EN 61000-6-4:2007, EN 61508:2010			
Functional safety data	BSR10	BSR11, BSR23	SSR10, SSR10M, SSR20, SSR20M, TSR10, TSR20, TSR20M, USR10	SSR32, SSR42, USR22
EN/IEC 61508:2010	SIL3, $PFH_D = 3.0 \times 10^{-9}$	SIL3, $PFH_D = 4.1 \times 10^{-9}$	SIL3, $PFH_D = 4.9 \times 10^{-9}$	SIL3, $PFH_D = 9.3 \times 10^{-9}$
EN/IEC 62061:2005+A1:2013	SILCL3, $PFH_D = 3.1 \times 10^{-9}$	SILCL3, $PFH_D = 4.1 \times 10^{-9}$	SILCL3, $PFH_D = 4.9 \times 10^{-9}$	SILCL3, $PFH_D = 3.9 \times 10^{-9}$
EN ISO 13849-1:2008	PL e, Cat. 4, $PFH_D = 3.1 \times 10^{-9}$	PL e, Cat. 4, $PFH_D = 4.1 \times 10^{-9}$	PL e, Cat. 4, $PFH_D = 4.9 \times 10^{-9}$	PL e, Cat. 4, $PFH_D = 3.9 \times 10^{-9}$
	Note! The relays must be cycled at least once a year.			
Electrical data				
Operating voltage	+24 VDC (19.2-27.6 VDC) PELV / SELV			
	Mains models: 85-265 VAC (50 / 60 Hz) or 120-375 VDC			
Response time at deactivation	20 ms			
Maximum switching capacity				
DC13, DC1	Up to 6 A (except relays with 2 NO + 2 NO outputs that switch 3 A)			
AC15, AC1	Up to 5 A (except relays with 2 NO + 2 NO outputs that switch 3 A)			
Mechanical data				
Operating temperature	BSR10, BSR11, BSR23, SSR10M, SSR20M, TSR20M -25 °C to 55 °C SSR10, SSR20, SSR32, SSR42, TSR10, TSR20, USR10, USR22 -25 °C to 65 °C			
Humidity range	10% … 90%			
Protection class	IP20 (enclosure/electrical cabinet must have at least an IP54)			
Mounting	35 mm DIN rail (DIN 50022)			
Minimum space between relays in the enclosure	0 mm (except for BSR23 which needs 5 mm distance)			

More information

Fore more information, e.g. the complete technical information, see product manuals:
https://library.abb.com/

Connection diagrams

For Sentry connection diagrams please see https://library.abb.com/

Dimension drawing

Sentry

Dimension drawing

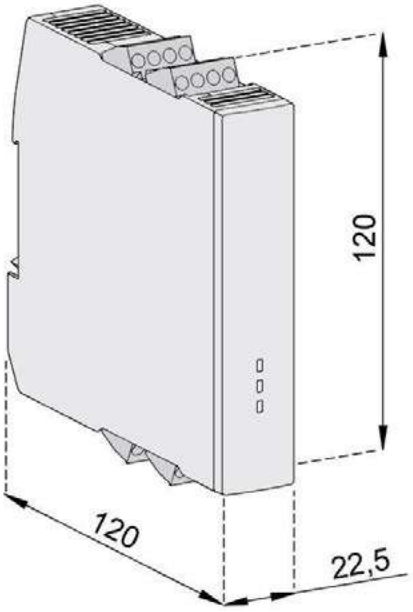

All dimensions in mm



Optical safety devices

3–**2** **Introduction and overview**

3–**8** **Safety light curtain - Orion1 Base**

3–**16** **Safety light curtain - Orion1 Extended**

3–**24** **Safety light grid - Orion2 Base**

3–**32** **Safety light grid - Orion2 Extended**

3–**40** **Safety light grid - Orion3 Base**

3–**48** **Safety light grid - Orion3 Extended**

Introduction and overview
Selection guide

Light curtains and light grids that cover most types of applications.

	Orion1			
Function	Light curtain, Transmitter + Receiver, Slim profile			
Image				
Type	**Orion1 Base**		**Orion1 Extended**	
Type of detection	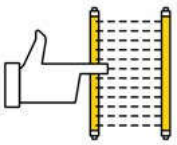 Finger	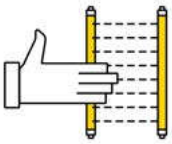 Hand	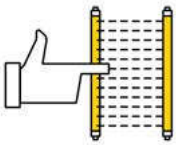 Finger	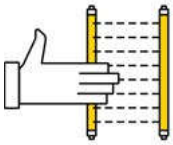 Hand
Resolution	14 mm	30 mm	14 mm	30 mm
Protected height	15-180 cm	15-180 cm	30-180 cm	30-180 cm
Applications	Manually serviced machines with short safety distances.		Manually serviced machines with short safety distances. With advanced features like muting, blanking and cascading.	
Functions				
Range	6 m	19 m	7 m	20 m
Auto/Manual reset	•	•	•	•
EDM	•	•	•	•
Muting			•	•
Override			•	•
Integrated muting lamp				
Blanking			•	•
No dead zone			•	•
Coding			•	•
Cascading			•	•

	Orion2		Orion3	
Function	Light grid, Transmitter + Receiver, Slim profile		Light grid, Active + Passive units, Sturdy profile	
Image				
Type	**Orion2 Base**	**Orion2 Extended**	**Orion3 Base**	**Orion3 Extended**
Type of detection	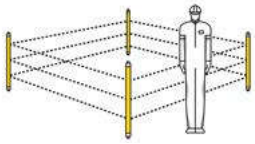 Body		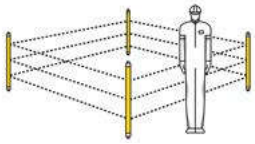 Body	
Resolution	2, 3 or 4 beams			
Protected height	50-120 cm			
Applications	Perimeter guarding over long distances	Perimeter guarding over long distances with muting	Perimeter guarding with one-sided connection	Perimeter guarding with one-sided connection and muting
Functions				
Range	50 m	50 m	Up to 8 m	Up to 8 m
Auto/Manual reset	•	•	•	•
EDM	•	•	•	•
Muting		•		•
Override		•		•
Integrated muting lamp		•		•
Blanking				
No dead zone				
Coding				
Cascading				

Introduction and overview

Selection orientation

Choose the right resolution for your application

Finger detection
Light curtains with 14 mm resolution are intended for finger detection when the light guard needs to be very close to the machine in order to give the operator a good view and easy accessibility to the machine.

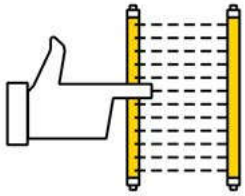

Hand detection
Light curtains with 30 mm resolution are intended for hand detection and area protection and is often a good compromise between cost and accessibility to the machine. They offer a better sensing range than finger detection light curtains, but require a slightly greater safety distance.

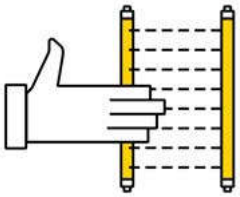

Body detection
Light grids have a resolution adapted for detection of the whole body and are intended for perimeter guarding where there is a requirement for high accessibility. They offer a very good sensing range, but require a much greater safety distance than light guards for finger and hand detection.

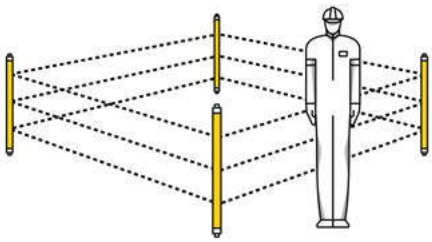

Introduction and overview
Standards

Resolution and safety distance
The optical safety device must be installed so that no-one can reach the hazardous area without first passing through the detection zone of the light guard. The distance from the hazardous area to the detection zone of the optical safety device must be large enough in order for the machine to have time to stop before someone can reach the hazardous area. This distance is called the safety distance, and it shall be calculated using the formula from EN ISO 13855.

The safety distance is influenced by the distance between each beam in the light guard. The closer the beams are together, the smaller the safety distance can be, which is why light curtains for finger detection can be placed much closer to the hazardous area than light grids for body detection.

Safety distance according to EN ISO 13855

The distance 'S' is the minimum distance between a light curtain and a hazardous area. This is calculated with the formula from EN ISO 13855 - Safety of machinery - Positioning of safeguards with respect to the approach speeds of parts of the human body.

$$S = (K \times T) + C$$

S = minimum distance in mm
K = approach speed (of hand or body) in mm/s
T = stopping time of the machine (including reaction time of safety devices) in seconds
C = additional distance in mm based upon the body´s intrusion towards the hazardous area before the safety device has been actuated.

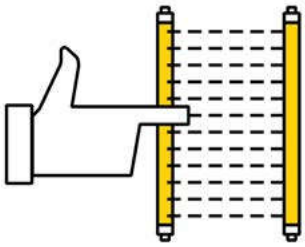

Resolution for finger (≤14 mm) gives C = 0

NB If it is possible to reach the hazard zone by reaching over the light beam, an adjustment is made to the formula. In table 1 in EN ISO 13855 an alternative safety distance addition (C_{ro}) is given to the formula S = (K x T) + C. The greatest value out of C and C_{ro} is to be used to prevent reaching the hazard zone by reaching over the light curtain/grid.

Minimum distances for light curtains installed vertically and horizontally according to EN ISO 13855

S = minimum distance in mm
H1 = the lower beam may not be situated higher than 300 mm above the ground
H2 = the upper beam may not be situated lower than 900 mm above the ground

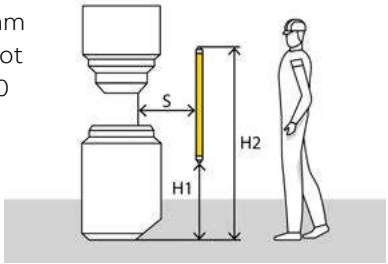

S = minimum distance in mm
H = the light curtain detection zone must be positioned between 0 and 1000 mm above the floor

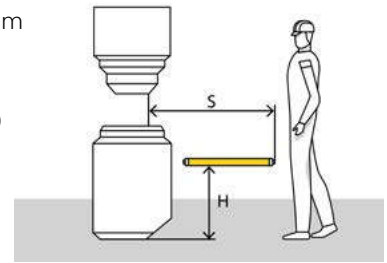

For S ≤ 500 mm the minimum distance for vertical installation is calculated with the following formula:

$$S = (2000 \times T) + 8 \times (d-14)$$

where d is the light curtain´s resolution in mm.

K = 2000 mm/s is used to represent the speed of the hand. The expression (8 x (d-14)) may never be less than 0. Minimum distance S may never be less than 100 mm.

If the minimum distance according to the formula above gets larger than 500 mm one can instead use:

$$S = (1600 \times T) + 8 \times (d-14)$$

K = 1600 mm/s is used to represent the speed of the body. Minimum distance according to this formula is 500 mm.

The minimum distance for horizontal installation is calculated with the following formula:

$$S = (1600 \times T) + (1200 - 0.4 \times H)$$

where H is the height of the detection zone above the reference plane, e.g. the ground

(1200 – 0,4 x H) may not be less than 850 mm. Depending on the resolution, d, that the light curtain has, there is a minimum height where the detection zone may be placed. This is calculated with:
H = 15 x (d – 50).
H cannot be less than 0. With a resolution d =14 or 30 mm one can therefore install the light curtain from H = 0 and up. The higher it is situated, the shorter the minimum distance gets. The highest permissible height H of the detection zone is 1000 mm.

When you use a horizontal light curtain as perimeter protection, the depth of the light curtain shall be at least 750 mm to prevent people from inadvertently stepping over it. The estimated minimum distance is measured from the machine's hazardous section to the outermost beam of the horizontal light curtain (seen from the machine).

Minimum distance for light beams according to EN ISO 13855

For light beams the minimum distance is calculated from the following:

$$S = (1600 \times T) + 850 \text{ mm}$$

NOTE! The additional distance will in most cases be more than 850 mm due to the possibility to reach over a light beam. (C_{ro})

The formula applies to light guards with 2, 3 or 4 beams. It is the risk assessment that decides the number of beams that are to be chosen. The following possibilities must be considered.

- to crawl under the lowest beam;
- to reach over the top beam;
- to reach in between two beams;
- that the body passes in between two beams.

To fulfill the requirements the beams shall be installed at the following heights:

Number of beams	Height over the reference plane, e.g. ground
4	300, 600, 900, 1200
3	300, 700, 1100
2	400, 900

Minimum distance for single beams according to EN ISO 13855

A single beam as only protection is normally not suitable to prevent whole body access. Single beams are mostly used in combination with other safety devices or fixed guards.

The risk assessment should determine if a single beam is a suitable protection for the hazard in question.

The safety distance is calculated using:

$$S = (1600 \times T) + 1200 \text{ mm}$$

A height of 750 mm from the reference plane has been found suitable to prevent inadvertent access to the danger zone.

Safety light curtain
Orion1 Base

Orion1 Base is an easy to use light curtain with compact dimensions and two resolutions for detection of fingers and hands.

Light curtains are usually used closed to the hazardous zone when repeated access to the machine is necessary, for example manually serviced machines.

Light curtains can also be used to limit work zones inside the hazardous area and be mounted horizontally for area protection.



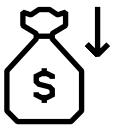

Cost effective solution

No more functions than neccessary
Orion1 Base comes with a minimum of advanced functionalities to save cost.

Minimized cabling
A local reset button can be connected directly to the light curtain. In this way there is no need for a cable between the reset button and the electrical cabinet or for an extra control module.

External device monitoring
Each light curtain can monitor the actuators without any extra control module (EDM function).



Continuous operation

Visible alignment level
Since the alignment level is displayed, the alignment can be improved before the occurrence of an unwanted stop.

Extensive error indication
Extensive error indication reduces troubleshooting time.

Protection against harsh environment
Protective tubes and lens shields protect the devices in harsh environments.



Easy to install

Easy to align
Alignment help and a wide angle within the limits of a Type 4 device facilitate alignment. Rotation brackets also simplify alignment.

Easy to connect
M12 connectors speed up cabling.

Applications and features

Orion1 Base

Applications

Vertical mounting
When using standard vertical mounting the light guard can be placed close to the hazard zone. This is suitable for applications where repeated access to the machine is necessary, e.g. manually serviced machines.

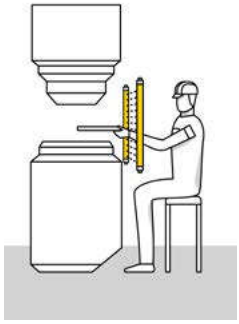

Horizontal mounting
Horizontal mounting is mainly used for area protection and limitation of work zones.



Features

Finger detection
A 14 mm resolution is intended for finger detection when the light guard needs to be very close to the machine in order to give the operator a good view and easy accessibility to the machine. A 14 mm resolution enables a sensing range of 6 m.

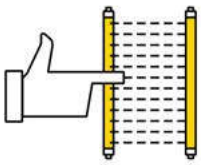

Hand detection
A 30 mm resolution is intended for hand detection and area protection and is a good compromise between cost and accessibility to the machine. A 30 mm resolution enables a sensing range of 19 m.

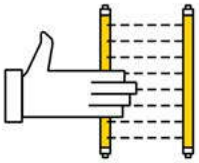

Local reset
A local reset button is connected directly to the light guard instead of to the safety control module in the electrical cabinet. This saves safety relays/PLC inputs and minimizes cabling to the electrical cabinet. Clever accessories makes the connection easier.



EDM
External Device Monitoring is a feature allowing the light guard to supervise the actuators in simpler applications, eliminating the need for a safety relay or programmable safety controller.

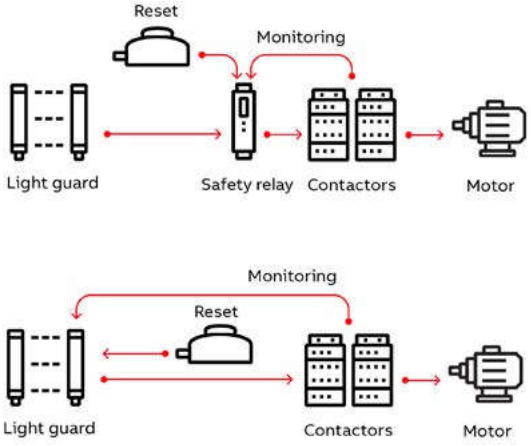

Safety light curtain

Orion1 Base



Orion1 Base

Ordering Details

Detection (Resolution mm)	Protected height mm	Type (Transmitter + receiver)	Order code
Finger (14)	150	Orion1-4-14-015-B	2TLA022300R0000
	300	Orion1-4-14-030-B	2TLA022300R0100
	450	Orion1-4-14-045-B	2TLA022300R0200
	600	Orion1-4-14-060-B	2TLA022300R0300
	750	Orion1-4-14-075-B	2TLA022300R0400
	900	Orion1-4-14-090-B	2TLA022300R0500
	1050	Orion1-4-14-105-B	2TLA022300R0600
	1200	Orion1-4-14-120-B	2TLA022300R0700
	1350	Orion1-4-14-135-B	2TLA022300R0800
	1500	Orion1-4-14-150-B	2TLA022300R0900
	1650	Orion1-4-14-165-B	2TLA022300R1000
	1800	Orion1-4-14-180-B	2TLA022300R1100
Hand (30)	150	Orion1-4-30-015-B	2TLA022302R0000
	300	Orion1-4-30-030-B	2TLA022302R0100
	450	Orion1-4-30-045-B	2TLA022302R0200
	600	Orion1-4-30-060-B	2TLA022302R0300
	750	Orion1-4-30-075-B	2TLA022302R0400
	900	Orion1-4-30-090-B	2TLA022302R0500
	1050	Orion1-4-30-105-B	2TLA022302R0600
	1200	Orion1-4-30-120-B	2TLA022302R0700
	1350	Orion1-4-30-135-B	2TLA022302R0800
	1500	Orion1-4-30-150-B	2TLA022302R0900
	1650	Orion1-4-30-165-B	2TLA022302R1000
	1800	Orion1-4-30-180-B	2TLA022302R1100



JSM Orion01

Spare parts (included when ordering Orion)

Description	Type	Order code
4 standard brackets for Orion1 & Orion2	JSM Orion01	2TLA022310R0000

Accessories

Orion1 Base



Orion Laser pointer



JSM Orion03



Smile 11 RB



M12-3R



Tina 10C

Accessories

Mounting accessories		
Description	**Type**	**Order code**
Orion Test Piece 14 mm	Orion TP-14	2TLA022310R5200
Orion Test Piece 30 mm	Orion TP-30	2TLA022310R5300
Orion Laser pointer	Orion Laser	2TLA022310R5000
JSM M5B special T-nut M5 to be used with M5x12 screw for mounting Orion on Quick-Guard	T-nut JSM M5B	2TLA040035R0400
4 rotation brackets for Orion1 Base	JSM Orion03	2TLA022310R0100
Kit for mounting of Orion1 & Orion2 in Stand (4 pieces for lengths shorter than 1200 mm)	JSM Orion06	2TLA022310R0400
Kit for mounting of Orion1 & Orion2 in Stand (6 pieces for lengths of 1200 mm or more)	JSM Orion07	2TLA022310R0500
Kit for mounting of Orion1 Mirror in Stand	JSM Orion11	2TLA022310R0900
Orion Plate kit for adjustment of protective stand	Orion Stand Plate	2TLA022312R5000
Deviating mirror to be mounted in Orion Stand with one kit JSM Orion11	Orion1 Mirror*	
Protective stand	Orion Stand*	
Protective tube	Orion WET*	
Lens shield	Orion Shield*	
Connection accessories		
Smile reset button with NO contact	Smile 11 RA	2TLA030053R0000
Smile reset button with NO contact for Pluto	Smile 11 RB	2TLA030053R0100
Smile reset button with NO contact for Orion1 Base	Smile 11RO1	2TLA022316R3000
Y-connector for series connection of DYNlink devices with M12-5 connectors, e.g. Eden	M12-3A	2TLA020055R0000
Y-connector for connection of a Smile reset button to Orion	M12-3R	2TLA022316R0000
Y-connector for easy connection of a transmitter	M12-3D	2TLA020055R0300
Adaptation of OSSD to DYNlink. M12-8 connector for OSSD and M12-5 for DYNlink.	Tina 10A v2	2TLA020054R1210
Adaptation of OSSD to DYNlink with possibility to connect a local reset button. M12-8 connector for OSSD and M12-5 for DYNlink and reset.	Tina 10B v2	2TLA020054R1310
Adaptation of OSSD to DYNlink with possibility to power the transmitter. M12-8 connector for OSSD and M12-5 for DYNlink and transmitter.	Tina 10C v2	2TLA020054R1610

*These accessories are available in different sizes.
For more information see:
Orion1 Mirror 2TLC172058L0201, Orion Stand 2TLC172059L0201, Orion WET 2TLC172061L0201, Orion Shield 2TLC172071L0201

For more information about the connection accessories, please see:
Orion connection accessories 2TLC172101L0201

How to choose correct reset button

Local or global reset	Adaption to DYNlink*	Safety controle module	Type	Useful connection accessories
Local reset button connected to the light guard (Orion in manual reset mode)	Yes	Vital or Pluto	Smile 11RO1	Tina 10B: OSSD to DYNlink + local reset button M12-3A: Serial connection of DYNlink
	No	Any safety control module compatible with light guard	Smile 11RO1	M12-3R: Easy connection of a local reset button
Global reset button connected to the control module (Orion in automatic reset mode)	Yes	Vital	Smile 11 RA	Tina 10A: OSSD to DYNlink Tina 10C: OSSD to DYNlink + supply to transmitter
		Pluto	Smile 11 RB	Tina 10A: OSSD to DYNlink Tina 10C: OSSD to DYNlink + supply to transmitter
	No	Any safety control module compatible with light guard	Smile 11 RA**	-

* The ABB Jokab Safety DYNlink solution offers the following advantages:
- Serial connection of safety devices while maintaining PLe/cat. 4, up to 25 Tina 10 per Vital and up to 5 Tina 10 per Pluto input.
- Only one safety input of the Pluto instead of two with the standard OSSD outputs.

** Smile 11 RA has one NO contact, which is the most common for reset buttons. Please check what is requested for the chosen safety control module.

Cables and connectors

Orion1 Base



M12-C61



M12-C61HE



M12-C334

Cable with connectors

Connector	Female/male	Length	Special feature	Type	Order code
M12-5	Female	3 m		M12-C31	2TLA020056R0500
	(b)	6 m		M12-C61	2TLA020056R0000
			Harsh environment, halogen free	M12-C61HE	2TLA020056R8000
		10 m		M12-C101	2TLA020056R1000
			Harsh environment, halogen free	M12-C101HE	2TLA020056R8100
		20 m		M12-C201	2TLA020056R1400
	Female + male	0.3 m		M12-C0312	2TLA020056R5800
	(a)	0.06 m		M12-C00612	2TLA020056R6300
		1 m		M12-C112	2TLA020056R2000
		3 m		M12-C312	2TLA020056R2100
		6 m		M12-C612	2TLA020056R2200
		10 m		M12-C1012	2TLA020056R2300
		16 m		M12-C1612	2TLA020056R5400
		20 m		M12-C2012	2TLA020056R2400
	Male	6 m		M12-C62	2TLA020056R0200
	(c)	10 m		M12-C102	2TLA020056R1200
M12-8	Female	3 m		M12-C33	2TLA020056R2900
	(d)	6 m		M12-C63	2TLA020056R3000
		10 m		M12-C103	2TLA020056R4000
		20 m		M12-C203	2TLA020056R4100
	Female + male	0.06 m		M12-C00634	2TLA020056R6400
	(e)	1 m		M12-C134	2TLA020056R5000
		3 m		M12-C334	2TLA020056R5100
M12-8 male + female	Female + male	0.2		M12-CTO1BA[1]	2TLA022315R3000
M12-8 male + female	Female + male	0.2		M12-CTO1BM[2]	2TLA022315R3100

Letters (a, b, c, d, e, t_1, t_2) refer to cables in connection examples, e.g:
2TLC010002T0001 Connection diagram Orion_cables_Tina10_M12-3A_M12-3D

1) M12-CTO1BA (t_1) can be used for:
- connection of Orion1 Base to Tina 10A/C
- replacement of Focus II in automatic reset with Orion in automatic reset.
The EDM function should be deactivated in all cases.

2) M12-CTO1BM (t_2) can be used for:
- connection of Orion1 Base to Tina 10B or M12-3R for use of a local reset button, for example Smile 11ROx
- replacement of Focus II in manual reset with Orion in manual reset.
The EDM function should be deactivated in all cases.



M12-C01



C5 cable

Separate cables and connectors

Description	Type	Order code
Connectors		
M12-5 pole female, straight	M12-C01	2TLA020055R1000
M12-5 pole male, straight	M12-C02	2TLA020055R1100
M12-8 pole female, straight	M12-C03	2TLA020055R1600
M12-8 pole male, straight	M12-C04	2TLA020055R1700
Cable with 5 conductors		
10 m cable with 5 x 0.34 shielded conductors	C5 cable 10 m	2TLA020057R0001
50 m cable with 5 x 0.34 shielded conductors	C5 cable 50 m	2TLA020057R0005
100 m cable with 5 x 0.34 shielded conductors	C5 cable 100 m	2TLA020057R0010
200 m cable with 5 x 0.34 shielded conductors	C5 cable 200 m	2TLA020057R0020
500 m cable with 5 x 0.34 shielded conductors	C5 cable 500 m	2TLA020057R0050
Cable with 8 conductors		
50 m cable with 8 x 0.34 shielded conductors	C8 cable 50 m	2TLA020057R1005
100 m cable with 8 x 0.34 shielded conductors	C8 cable 100 m	2TLA020057R1010
200 m cable with 8 x 0.34 shielded conductors	C8 cable 200 m	2TLA020057R1020
500 m cable with 8 x 0.34 shielded conductors	C8 cable 500 m	2TLA020057R1050

Connection examples

Orion1 Base

Orion with Tina 10A/C

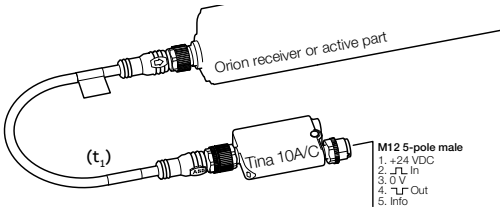

Without local reset button

Connection to the ABB Jokab Safety DYNlink signal via Tina 10 A/C. To be used with Vital safety control module or Pluto programmable safety controller.

Reset to Orion with Tina 10B

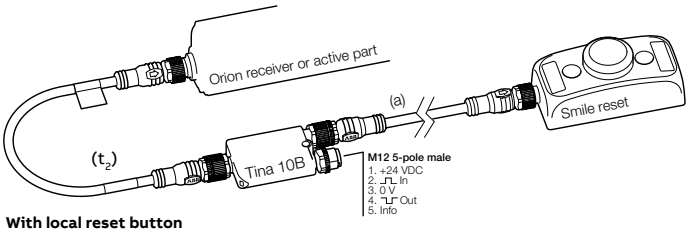

With local reset button

Connection to the ABB Jokab Safety DYNlink signal via Tina 10B. To be used with Vital safety control module or Pluto programmable safety controller.

Reset to Orion with M12-3R

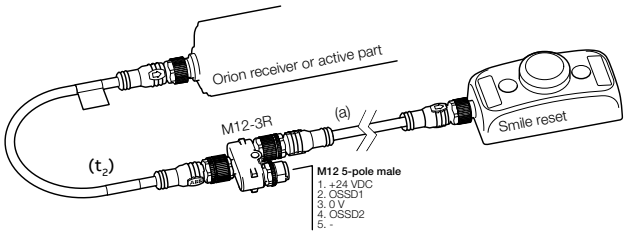

Connection of a local reset button via M12-3R.

Connection diagrams

For Orion1 Base connection diagrams please see https://library.abb.com/

Technical data

Orion1 Base

Technical data

Approvals	
Conformity	CE 2006/42/EC - Machinery 2004/108/EC - EMC EN ISO 13849-1:2008, EN 62061:2005/A1:2013, EN 61496-1:2013, EN 61496-2, EN 61508-1:2010, EN 61508-2:2010, EN 61508-3:2010, EN 61508-4:2010
Functional safety data	
EN 61508:2010	SIL3, PFH_D = 2.64 x 10^{-9}
EN 62061:2005+A1:2013	SILCL3, PFH_D = 2.64 x 10^{-9}
EN ISO 13849-1:2008	PL e, Cat. 4, PFH_D = 2.64 x 10^{-9}
Electrical data	
Power supply	+24 VDC ± 20%
Power consumtion, transmitter	1.5 W max
Power consumption, receiver	4 W max (without load)
Outputs	2 PNP
Short-circuit protection	1.4 A max
Output current	0.5 A max / output
Output voltage – ON	Vdd -1 V min
Output voltage – OFF	0.2 V max
Capacitive load	2.2 µF at +24 VDC max
Cable length (for power supply)	50 m max
Connectors	M12-4 pole male on transmitter (compatible with M12-5 pole female)
	M12-8 pole male on receiver
Optical data	
Light emission (λ)	Infrared, LED (950 nm)
Resolution	14 or 30 mm
Operating distance	0.2…19 m for 30 mm
	0.2…6 m for 14 mm
Ambient light rejection	According to IEC-61496-2:2013
Mechanical data	
Operating temperature	0…+ 55 °C
Storage temperature	- 25…+ 70 °C
Humidity range	15…95% (no condensation)
Protection class	IP65 (EN 60529:2000)
Weight	1.3 kg / meter for each single unit
Housing material	Painted aluminium (yellow RAL 1003)
Front glass material	PMMA
Cap material	PC MAKROLON

More information

For more information, e.g. the complete technical information, please see product manual for:
Orion1 Base 2TLC172287M0201

Connection diagrams

For Orion1 Base connection diagrams please see https://library.abb.com/

Dimension drawings

Orion1 Base

Orion1 Base

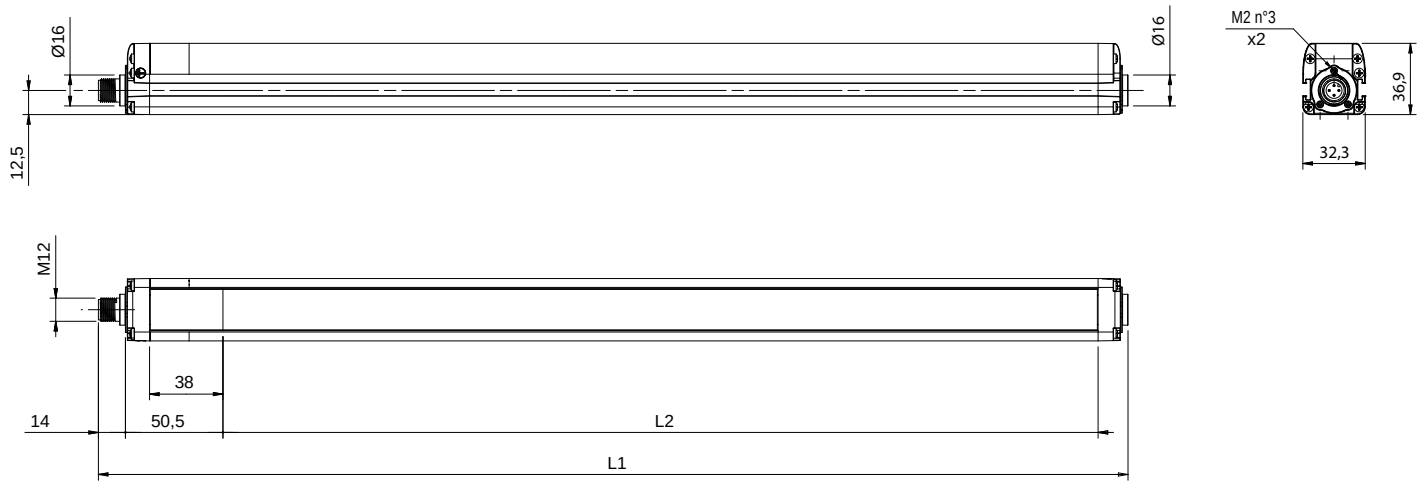

All dimensions in mm

Dimension

Protected height mm	L1 mm	L2 mm	Type
150	233.3	153.3	Orion1-4-xx-015-B
300	383.2	303.2	Orion1-4-xx-045-B
450	533.2	453.3	Orion1-4-xx-045-B
600	683.3	603.2	Orion1-4-xx-060-B
750	833.2	753.3	Orion1-4-xx-075-B
900	983.2	903.2	Orion1-4-xx-090-B
1050	1133.2	1053.2	Orion1-4-xx-105-B
1200	1283.2	1203.3	Orion1-4-xx-120-B
1350	1433.2	1353.2	Orion1-4-xx-135-B
1500	1583.3	1503.3	Orion1-4-xx-150-B
1650	1733.3	1653.3	Orion1-4-xx-165-B
1800	1883.3	1803.3	Orion1-4-xx-180-B

xx = Resolution

Safety light curtain
Orion1 Extended

Orion1 Extended is an easy to use light curtain with compact dimensions. It has two resolutions for detection of fingers and hands, and comes with advanced features like cascading, muting and blanking.

Light curtains are usually placed closed to the hazardous zone when repeated access to the machine is necessary, for example manually serviced machines.



Cost effective solution

Integrated muting function
Muting sensors are connected directly to the light grid, with no need for a remote muting module.

No dead zones
The light beams cover all of the profile length, without the usual dead zones at the ends requiring extra mechanical guards.

Easy serial connection
Cascading with the standard units: no separate slave or master units.

Easy to install

Easy to align
Alignment help and a wide angle within the limits of a Type 4 device facilitate installation.

Easy to connect
Cables with M12 connectors speeds up connection.

Continuous operation

Reduced downtime
Extensive error indication reduces troubleshooting time.

Interference protection
Protection against mutual interference with coding.

Features

Orion1 Extended

Finger detection
A 14 mm resolution is intended for finger detection when the light guard needs to be very close to the machine in order to give the operator a good view and easy accessibility to the machine. A 14 mm resolution enables a sensing range of 7 m.

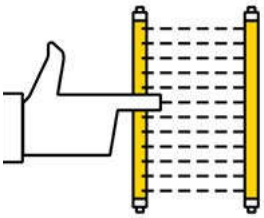

Hand detection
A 30 mm resolution is intended for hand detection and area protection and is a good compromise between cost and accessibility to the machine. A 30 mm resolution enables a sensing range of 20 m.

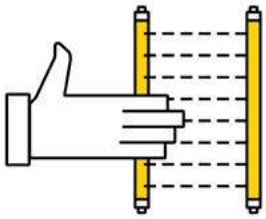

Blanking
The blanking function allows to define a number of beams that can be constantly interrupted without stopping the machine. In this way a fixed material or a cable is allowed in the protected field, but a hand interrupting an extra beam would stop the machine. With floating blanking, the object, for ex. the cable, can move within the protected field.

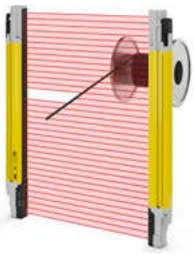

No dead zones
A special feature of Orion1 Extended is that the light beams cover all of the profile length, without any dead zones. This enables to place it inside openings, instead of having a larger light guard in front of an opening.

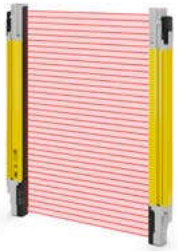

Cascading
All Orion1 Extended units can be connected in series (cascaded) to easily create a suitable light curtain setup with no special units needed.



Muting
By connecting muting sensors to the light guard, it can distinguish material from persons and allow the material to pass through an opening but not persons.

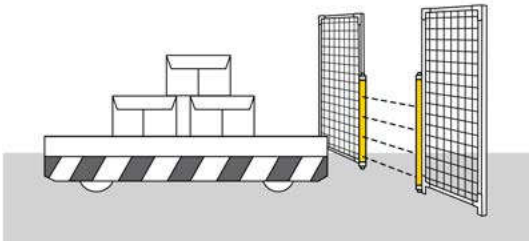

Local reset
A local reset button is connected directly to the light guard instead of to the safety control module in the electrical cabinet. This saves safety relays/programmable inputs and minimizes cabling to the electrical cabinet.

EDM
External Device Monitoring is a feature allowing the light guard to supervise the actuators in simpler applications, eliminating the need for a safety relay or programmable safety controller.

Ordering information

Orion1 Extended



Orion1 Extended

Ordering Details

Resolution mm	Protected height mm	Type (Transmitter + receiver)	Order code
Finger (14)	300	Orion1-4-14-030-E	2TLA022301R0100
	450	Orion1-4-14-045-E	2TLA022301R0200
	600	Orion1-4-14-060-E	2TLA022301R0300
	750	Orion1-4-14-075-E	2TLA022301R0400
	900	Orion1-4-14-090-E	2TLA022301R0500
	1050	Orion1-4-14-105-E	2TLA022301R0600
	1200	Orion1-4-14-120-E	2TLA022301R0700
	1350	Orion1-4-14-135-E	2TLA022301R0800
	1500	Orion1-4-14-150-E	2TLA022301R0900
	1650	Orion1-4-14-165-E	2TLA022301R1000
	1800	Orion1-4-14-180-E	2TLA022301R1100
Hand (30)	300	Orion1-4-30-030-E	2TLA022303R0100
	450	Orion1-4-30-045-E	2TLA022303R0200
	600	Orion1-4-30-060-E	2TLA022303R0300
	750	Orion1-4-30-075-E	2TLA022303R0400
	900	Orion1-4-30-090-E	2TLA022303R0500
	1050	Orion1-4-30-105-E	2TLA022303R0600
	1200	Orion1-4-30-120-E	2TLA022303R0700
	1350	Orion1-4-30-135-E	2TLA022303R0800
	1500	Orion1-4-30-150-E	2TLA022303R0900
	1650	Orion1-4-30-165-E	2TLA022303R1000
	1800	Orion1-4-30-180-E	2TLA022303R1100



JSM Orion01

Spare parts (included when ordering Orion)

Description	Type	Order code
4 standard brackets for Orion1 & Orion2	JSM Orion01	2TLA022310R0000

Accessories

Orion1 Extended



OMC1

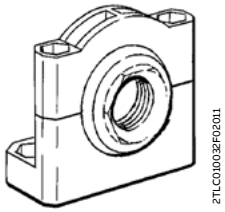

JSM 64



Orion Laser pointer

Accessories

Connection accessories		
Description	**Type**	**Order code**
Connection box for two or four muting sensors	OMC1	2TLA022316R2000
Retroreflex photoelectric sensor	Mute R2	2TLA022044R0500
Adjustable mounting bracket for M18 sensors (e.g. Mute R2).	JSM 64	2TLA040007R0200
Reflector diameter 63 mm	Reflect 1	2TLA022044R2000
Reflector diameter 82 mm	Reflect 2	2TLA022044R3000
Smile reset button with NO contact	Smile 11 RA	2TLA030053R0000
Smile reset button with NO contact for Pluto	Smile 11 RB	2TLA030053R0100
Mounting accessories		
Orion Test Piece 14 mm	Orion TP-14	2TLA022310R5200
Orion Test Piece 30 mm	Orion TP-30	2TLA022310R5300
Orion Laser pointer	Orion Laser	2TLA022310R5000
JSM M5B special T-nut M5 to be used with M5x12 screw for mounting Orion on Quick-Guard	T-nut JSM M5B	2TLA040035R0400
Kit for mounting of Orion1 & Orion2 in Stand (4 pieces for lengths shorter than 1200 mm)	JSM Orion06	2TLA022310R0400
Kit for mounting of Orion1 & Orion2 in Stand (6 pieces for lengths of 1200 mm or more)	JSM Orion07	2TLA022310R0500
Kit for mounting of Orion1 Mirror in Stand	JSM Orion11	2TLA022310R0900
Orion Plate kit for adjustment of protective stand	Orion Stand Plate	2TLA022312R5000
Deviating mirror to be mounted in Orion Stand with one kit JSM Orion11	Orion1 Mirror*	
Protective stand	Orion Stand*	

*These accessories are available in different sizes.
For more information see:
Orion1 Mirror 2TLC172058L0201
Orion Stand 2TLC172059L0201

For more information about the connection accessories, please see:
Orion connection accessories 2TLC172101L0201

Cables

Orion1 Extended



M12-C61



M12-C61HE



M12-C2012

Cables with connectors

Muting to be used	Neccessary transmitter/receiver cable	Suitable cable between transmitter/receiver cable and el-cabinet	Length	Special feature	Type	Order code
Yes	Transmitter M12-C02PT2T	M12-5 female single ended, to e.g. el-cabinet (b)	3 m		M12-C31	2TLA020056R0500
			6 m		M12-C61	2TLA020056R0000
			6 m	Harsh environment, halogen free	M12-C61HE	2TLA020056R8000
			10 m		M12-C101HE	2TLA020056R8100
			10 m		M12-C101	2TLA020056R1000
			20 m		M12-C201	2TLA020056R1400
	Receiver M12-C02PT62RM	M12-5 male + female, to e.g. OMC1 (a)	0.06 m		M12-C00612	2TLA020056R6300
			0.3		M12-C0312	2TLA020056R5800
			1 m		M12-C112	2TLA020056R2000
			3 m		M12-C312	2TLA020056R2100
			6 m		M12-C612	2TLA020056R2200
			10 m		M12-C1012	2TLA020056R2300
			16 m		M12-C1612	2TLA020056R5400
			20 m		M12-C2012	2TLA020056R2400
		M12-12 female single ended, to e.g. el-cabinet	6 m		M12-C65	2TLA020056R7200
			10 m		M12-C105	2TLA020056R7300
			20 m		M12-C205	2TLA020056R7500
No	Transmitter M12-C02PT2T	M12-5 female single ended, to e.g. el-cabinet (b)	6 m		M12-C61	2TLA020056R0000
			6 m	Harsh environment, halogen free	M12-C61HE	2TLA020056R8100
			10 m		M12-C101HE	2TLA020056R5400
			10 m		M12-C101	2TLA020056R1000
			20 m		M12-C201	2TLA020056R1400
	Receiver M12-C02PT6RB	M12-12 female single ended, to e.g. el-cabinet	6 m		M12-C65	2TLA020056R7200
			10 m		M12-C105	2TLA020056R7300
			20 m		M12-C205	2TLA020056R7500



M12-C01



C5 cable

Separate cables and connectors

Description	Type	Order code
Connectors		
M12-5 pole female, straight	M12-C01	2TLA020055R1000
M12-5 pole male, straight	M12-C02	2TLA020055R1100
Cable with 5 conductors		
10 m cable with 5 x 0.34 shielded conductors	C5 cable 10 m	2TLA020057R0001
50 m cable with 5 x 0.34 shielded conductors	C5 cable 50 m	2TLA020057R0005
100 m cable with 5 x 0.34 shielded conductors	C5 cable 100 m	2TLA020057R0010
200 m cable with 5 x 0.34 shielded conductors	C5 cable 200 m	2TLA020057R0020
500 m cable with 5 x 0.34 shielded conductors	C5 cable 500 m	2TLA020057R0050



M12-C02PT2T

Special cables for Orion1 Extended

Description	Length	Type	Order code
Transmitter cable for Orion1 Extended. M12-5 male connector.	0.2 m	M12-C02PT2T	2TLA022315R0100
Receiver cable for Orion1 Extended when no muting. M12-12 male connector.	0.2 m	M12-C02PT6RB	2TLA022315R0200
Receiver cable for Orion1 Extended when muting. M12-5 male connector (for muting sensors) and M12-12 male connector.	0.2 m	M12-C02PT62RM	2TLA022315R0300
Cascade cable for Orion1 Extended	1 m	PT-C1PT	2TLA022315R1000
Cascade cable for Orion1 Extended	0.5 m	PT-C05PT	2TLA022315R1100
Cascade cable for Orion1 Extended	0.05 m	PT-C005PT	2TLA022315R1200

Connection example

Orion1 Extended

Connection of the muting sensors with M12-C02PT62RM and OMC1

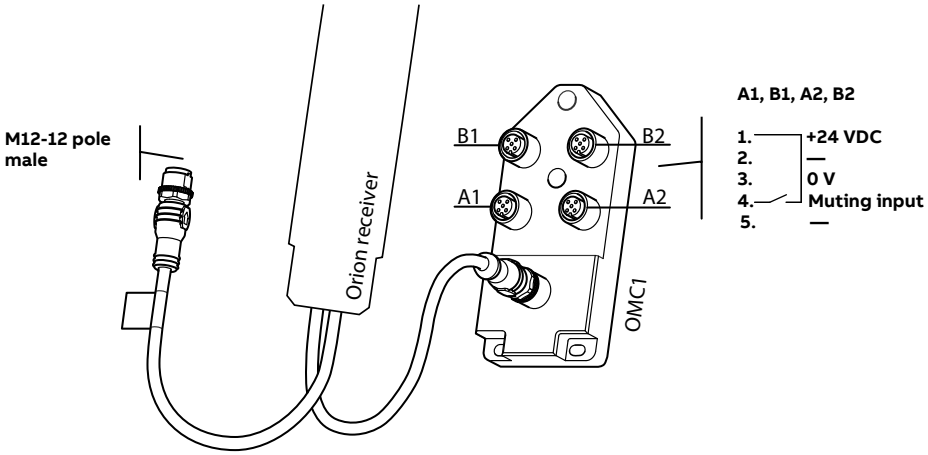

NB: Cable with M12-5 male + female connectors shall be used between muting sensors and OMC1 inputs A1, B1, A2, B2.

Technical data

Orion1 Extended

Technical data	
Approvals	
Conformity	CE 2006/42/EC - Machinery 2004/108/EC - EMC EN ISO 13849-1:2008, EN 62061:2005/A1:2013, EN 61496-1:2013, EN 61496-2, EN 61508-1:2010, EN 61508-2:2010, EN 61508-3:2010, EN 61508-4:2010
Functional safety data	
EN 61508:2010	SIL3, PFH_D = 2.64 x 10^{-9}
EN 62061:2005+A1:2013	SILCL3, PFH_D = 2.64 x1 0^{-9}
EN ISO 13849-1:2008	PL e, Cat. 4, PFH_D = 2.64 x 10^{-9}
Electrical data	
Power supply	+24 VDC ± 20%
Power consumtion, Transmitter	3 W max
Power consumption, Receiver	5 W max (without load)
Outputs	2 PNP
Short-circuit protection	1.4 A max
Output current	0.5 A max / output
Output voltage – ON	Vdd -1 V min
Output voltage – OFF	0.2 V max
Capacitive load	2.2 µF at +24 VDC max
Current for external lamp	20 mA min; 200 mA max
Cable length (for power supply)	50 m max
Connectors	M12-4 pole male on transmitter (compatible with M12-5 pole female)
	M12-8 pole male on receiver
Optical data	
Light emission (λ)	Infrared, LED (950 nm)
Resolution	14 or 30 mm
Operating distance	0.2...20 m for 30 mm
	0.2...7 m for 14 mm
Ambient light rejection	According to IEC-61496-2:2013
Mechanical data	
Operating temperature	0...+ 50 °C
Storage temperature	- 25...+ 70 °C
Humidity range	15...95% (no condensation)
Protection class	IP65 (EN 60529:2000)
Weight	1.35 kg / meter for each single unit
Housing material	Painted aluminium (yellow RAL 1003)
Front glass material	PMMA
Cap material	PBT Valox 508

More information

For more information, e.g. the complete technical information, see product manual for:
Orion1 Extended 2TLC172290M0201

Dimension drawings

Orion1 Extended

Orion1 Extended

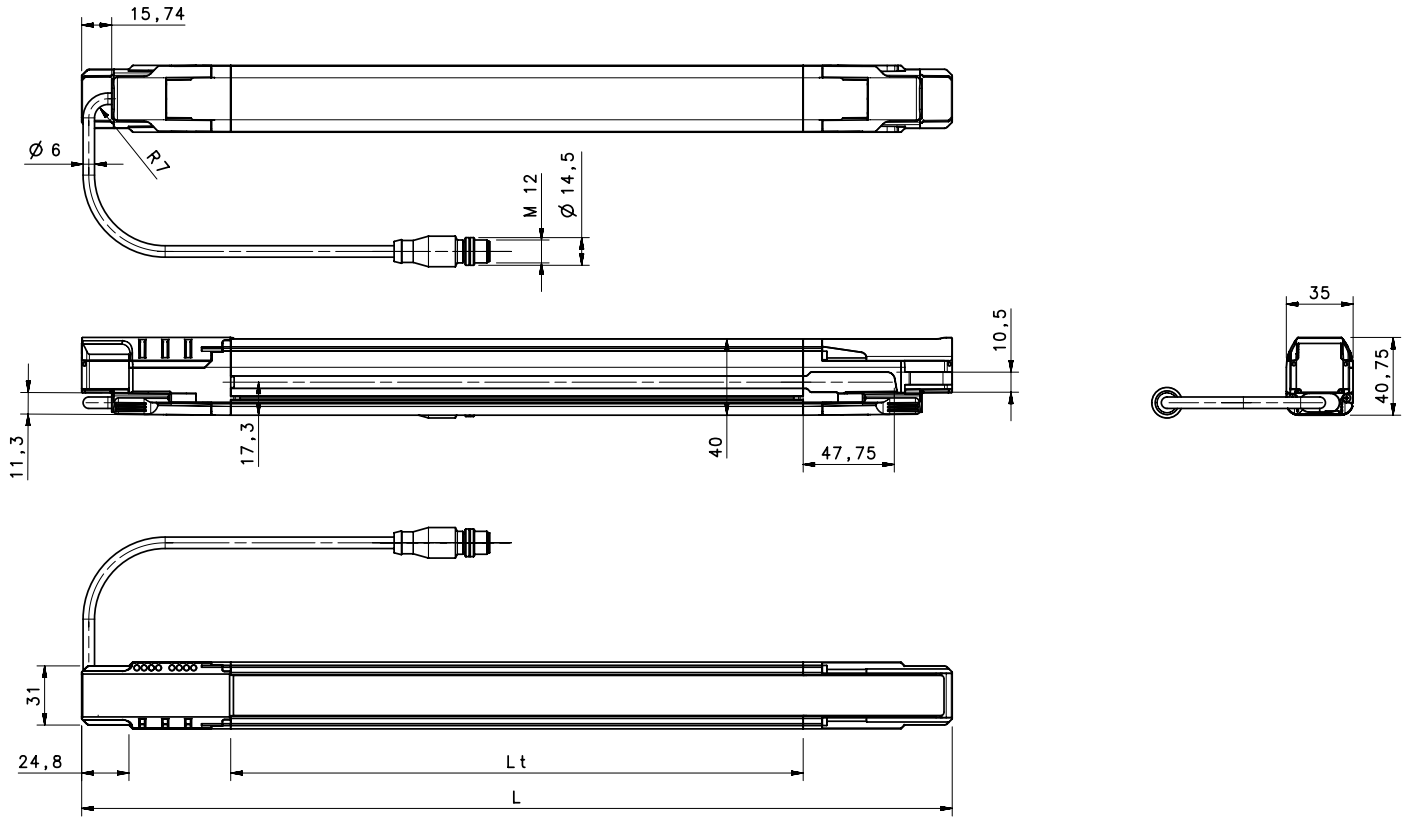

All dimensions in mm

Dimension

L1 mm	L2 mm	Type
300	306.3	Orion1-4-xx-030-E
450	456.3	Orion1-4-xx-045-E
600	606.3	Orion1-4-xx-060-E
750	756.3	Orion1-4-xx-075-E
900	906.3	Orion1-4-xx-090-E
1050	1056.3	Orion1-4-xx-105-E
1200	1206.3	Orion1-4-xx-120-E
1350	1356.3	Orion1-4-xx-135-E
1500	1506.3	Orion1-4-xx-150-E
1650	1656.3	Orion1-4-xx-165-E
1800	1806.3	Orion1-4-xx-180-E

xx = Resolution (14 or 30 mm)

Safety light grid
Orion2 Base

Orion2 Base is a compact light grid for access protection.

The light grid has 2-4 beams and is intended for body detection.

With an operating distance of 50 m between transmitter and receiver the light grid is suitable for applications with deviating mirrors.



Cost effective solution

Minimized cabling
A local reset button can be connected directly to the light grid, eliminating the need for cable between the reset button and the electrical cabinet or for an extra control module.

External device monitoring
Each light grid can monitor the actuators without any extra control module (EDM function).

Easy to install

Alignment help
Alignment help and a wide angle within the limits of a Type 4 device facilitate installation.

Easy adjustment
Rotation brackets makes alignment easy.

Fast connection
M12 connectors speed up cabling.

Continuous operation

Protection in harsh environments
The housing is IP65 rated, and protective tubes and lens shields are available to provide further protection for the device in harsh environments.

Applications and features

Orion2 Base

Application

Body detection over long distances
With 2-4 beams and a maximum sensing range of 50 m between transmitter and receiver, the light grid is intended for body detection and can be used with deviating mirrors to form a protective perimeter around a dangerous area.

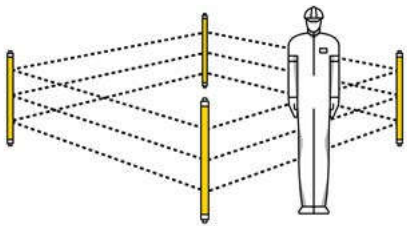

Features

EDM
External Device Monitoring is a feature allowing the light guard to supervise the actuators in simpler applications, eliminating the need for a safety relay or programmable safety controller.

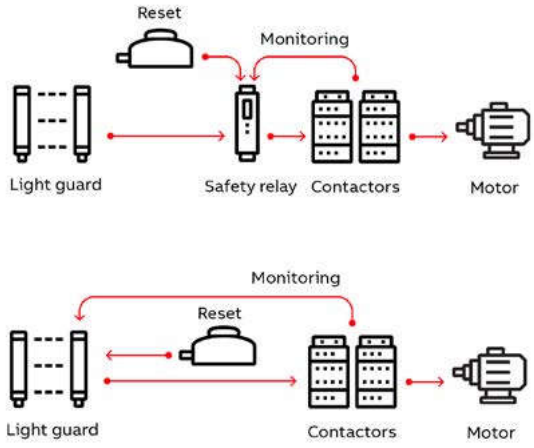

Local reset
A local reset button is connected directly to the light guard instead of to the safety control module in the electrical cabinet. This saves safety relays/programmable inputs and minimizes cabling to the electrical cabinet. Clever accessories make the connection easier.



Ordering information

Orion2 Base



Orion2 Base

Ordering details

Detection	Protected height mm	Type (Transmitter + receiver)	Order code
Body	500 (2 beams)	Orion2-4-K2-050-B	2TLA022304R0000
	800 (3 beams)	Orion2-4-K3-080-B	2TLA022304R0100
	900 (4 beams)	Orion2-4-K4-090-B	2TLA022304R0200
	1200 (4 beams)	Orion2-4-K4-120-B	2TLA022304R0300



JSM Orion01

Spare parts (imcluded when ordering Orion)

Description	Type	Order code
4 standard brackets for Orion1 & Orion2	JSM Orion01	2TLA022310R0000

Accessories
Orion2 Base


2TLC172776F0201

JSM Orion 04


2TLC172012V0201

M12-3R



2TLC172367F0201

Smile 11 RB


2TLC172477F0201

Tina 10 C

Accessories

Mounting accessories		
Description	**Type**	**Order code**
Orion Test Piece 14 mm	Orion TP-14	2TLA022310R5200
Orion Test Piece 30 mm	Orion TP-30	2TLA022310R5300
Orion Laser pointer	Orion Laser	2TLA022310R5000
JSM M5B special T-nut M5 to be used with M5x12 screw for mounting Orion on Quick-Guard	T-nut JSM M5B	2TLA040035R0400
4 rotation brackets for Orion2	JSM Orion04	2TLA022310R0200
Kit for mounting of Orion1 & Orion2 in Stand (4 pieces for lengths shorter than 1200 mm)	JSM Orion06	2TLA022310R0400
Kit for mounting of Orion1 & Orion2 in Stand (6 pieces for lengths of 1200 mm or more)	JSM Orion07	2TLA022310R0500
Orion Plate kit for adjustment of protective stand	Orion Stand Plate	2TLA022312R5000
Deviating mirror in stand for Orion 2 and 3	Orion Mirror*	
Protective stand	Orion Stand*	
Protective tube	Orion WET*	
Lens shield	Orion Shield*	
Connection accessories		
Smile reset button with NO contact	Smile 11 RA	2TLA030053R0000
Smile reset button with NO contact for Pluto	Smile 11 RB	2TLA030053R0100
Smile reset button with NO contact for Orion1 Base	Smile 11RO1	2TLA022316R3000
Y-connector for series connection of DYNlink devices with M12-5 connectors, e.g. Eden	M12-3A	2TLA020055R0000
Y-connector for connection of a Smile reset button to Orion	M12-3R	2TLA022316R0000
Y-connector for easy connection of a transmitter	M12-3D	2TLA020055R0300
Adaptation of OSSD to DYNlink. M12-8 connector for OSSD and M12-5 for DYNlink.	Tina 10A v2	2TLA020054R1210
Adaptation of OSSD to DYNlink with possibility to connect a local reset button. M12-8 connector for OSSD and M12-5 for DYNlink and reset button.	Tina 10B v2	2TLA020054R1310
Adaptation of OSSD to DYNlink with possibility to power the transmitter. M12-8 connector for OSSD and M12-5 for DYNlink and transmitter.	Tina 10C v2	2TLA020054R1610

*These accessories are available in different sizes.
For more information see:
Orion Mirror 2TLC172060L0201, Orion Stand 2TLC172059L0201, Orion WET 2TLC172061L0201, Orion Shield 2TLC172071L0201

For more information about the connection accessories, please see:
Orion connection accessories 2TLC172101L0201

How to choose correct reset button

Local or global reset	Adaption to DYNlink*	Safety controle module	Type	Useful connection accessories
Local reset button connected to the light guard (Orion in manual reset mode)	Yes	Vital or Pluto	Smile 11RO2	Tina 10B: OSSD to DYNlink + local reset button M12-3A: Serial connection of the DYNlink
	No	Any safety control module compatible with light guard	Smile 11RO2	M12-3R: Easy connection of a local reset button
Global reset button connected to the control module (Orion in automatic reset mode)	Yes	Vital	Smile 11 RA	Tina 10A: OSSD to DYNlink Tina 10C: OSSD to DYNlink + supply to transmitter
		Pluto	Smile 11 RB	Tina 10A: OSSD to DYNlink Tina 10C: OSSD to DYNlink + supply to transmitter
	No	Any safety control module compatible with light guard	Smile 11 RA**	-

* The ABB Jokab Safety DYNlink solution offers the following advantages:
- Serial connection of safety devices while maintaining PLe/cat. 4, up to 25 Tina 10 per Vital and up to 5 Tina 10 per Pluto input.
- Only one safety input of the Pluto instead of two with the standard OSSD outputs.

** Smile 11RA has one NO contact, which is the most common for reset buttons. Please check what is requested for the chosen safety control module.

Cables

Orion2 Base


2TLC172951F0201

M12-C61


2TLC010003F0201

M12-C61HE


2TLC172931F0201

M12-C334

Cable with connectors

Connector	Female/male	Length	Special feature	Type	Order code
M12-5	Female	3 m		M12-C31	2TLA020056R0500
	(b)	6 m		M12-C61	2TLA020056R0000
			Harsh environment, halogen free	M12-C61HE	2TLA020056R8000
		10 m		M12-C101	2TLA020056R1000
			Harsh environment, halogen free	M12-C101HE	2TLA020056R8100
		20 m		M12-C201	2TLA020056R1400
	Female + male	0.3 m		M12-C0312	2TLA020056R5800
	(a)	0.06 m		M12-C00612	2TLA020056R6300
		1 m		M12-C112	2TLA020056R2000
		3 m		M12-C312	2TLA020056R2100
		6 m		M12-C612	2TLA020056R2200
		10 m		M12-C1012	2TLA020056R2300
		16 m		M12-C1612	2TLA020056R5400
		20 m		M12-C2012	2TLA020056R2400
	Male	6 m		M12-C62	2TLA020056R0200
	(c)	10 m		M12-C102	2TLA020056R1200
M12-8	Female	3 m		M12-C33	2TLA020056R2900
	(d)	6 m		M12-C63	2TLA020056R3000
		10 m		M12-C103	2TLA020056R4000
		20 m		M12-C203	2TLA020056R4100
	Female + male	0.06 m		M12-C00634[1]	2TLA020056R6400
	(e)	1 m		M12-C134[1]	2TLA020056R5000
		3 m		M12-C334[1]	2TLA020056R5100

Letters (a, b, c, d, e) refer to cables in connection examples, e.g:
2TLC010002T0001 Connection diagram Orion_cables_Tina10_M12-3A_M12-3D

1) Used for the connection to Tina 10, M12-3D and M12-3R. Tina 10 can be connected directly to the light guard without cable, but will form an angle (i.e. not be aligned) with the light guard, which might be a problem if the light guard is mounted close to a wall/aluminum profile.


2TLC172657F0201

M12-C01


2TLC010038F0201

C5 cable

Separate Cables and connectors

Description	Type	Order code
Connectors		
M12-5 pole female, straight	M12-C01	2TLA020055R1000
M12-5 pole male, straight	M12-C02	2TLA020055R1100
M12-8 pole female, straight	M12-C03	2TLA020055R1600
M12-8 pole male, straight	M12-C04	2TLA020055R1700
Cable with 5 conductors		
10 m cable with 5 x 0.34 shielded conductors	C5 cable 10 m	2TLA020057R0001
50 m cable with 5 x 0.34 shielded conductors	C5 cable 50 m	2TLA020057R0005
100 m cable with 5 x 0.34 shielded conductors	C5 cable 100 m	2TLA020057R0010
200 m cable with 5 x 0.34 shielded conductors	C5 cable 200 m	2TLA020057R0020
500 m cable with 5 x 0.34 shielded conductors	C5 cable 500 m	2TLA020057R0050
Cable with 8 conductors		
50 m cable with 8 x 0.34 shielded conductors	C8 cable 50 m	2TLA020057R1005
100 m cable with 8 x 0.34 shielded conductors	C8 cable 100 m	2TLA020057R1010
200 m cable with 8 x 0.34 shielded conductors	C8 cable 200 m	2TLA020057R1020
500 m cable with 8 x 0.34 shielded conductors	C8 cable 500 m	2TLA020057R1050

Connection examples

Orion2 Base

Orion with Tina 10A/C

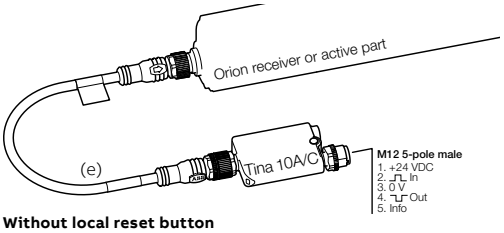

Without local reset button

Connection to the ABB Jokab Safety DYNlink signal via Tina 10 A/C. To be used with Vital safety control module or Pluto programmable safety controller.

Reset to Orion with Tina 10B

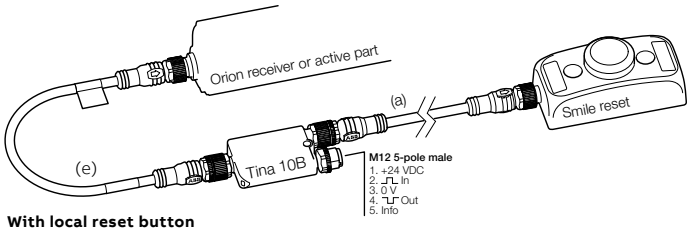

With local reset button

Connection to the ABB Jokab Safety DYNlink signal via Tina 10B. To be used with Vital safety control module or Pluto programmable safety controller.

Reset to Orion with M12-3R

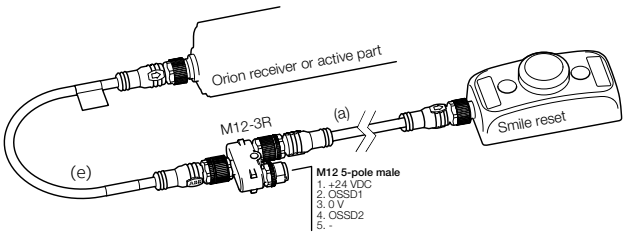

Connection of a local reset button via M12-3R.

Connection diagrams
For Orion2 Base connection diagrams please see https://library.abb.com/

Technical data

Orion2 Base

Technical data	
Approvals	
Conformity	CE 2006/42/EC - Machinery 2004/108/EC - EMC EN ISO 13849-1:2008, EN 62061:2005/A1:2013, EN 61496-1:2013, EN 61496-2, EN 61508-1:2010, EN 61508-2:2010, EN 61508-3:2010, EN 61508-4:2010
Functional safety data	
EN 61508:2010	SIL3, PFH_D = 2.64 x 10^{-9}
EN 62061:2005+A1:2013	SILCL3, PFH_D = 2.64 x 10^{-9}
EN ISO 13849-1:2008	PL e, Cat. 4, PFH_D = 2.64 x 10^{-9}
Electrical data	
Power supply	+24 VDC ± 20% (SELV/PELV)
Power consumtion, Transmitter	30 mA max. / 0.9 W
Power consumption, Receiver	75 mA max. (without load) / 2.2 W
Cable length (for power supply)	50 m max with 50 nF capacitive load and +24 VDC
Internal capacitance	23 nF (Transmitter) / 120 nF (Receiver)
Outputs	2 PNP
Short-circuit protection	Max 1.4 A at 55 °C, min. 1.1 A at -10 °C
Output current	0.5 A max / output
Leakage current	< 1 mA
Capacitive load (pure)	65 nF max at 25 °C
Resitive load (pure)	56 Ω min at +24 VDC
Current for external lamp	20 mA min, 250 mA max
Connectors	M12-4 pole male on transmitter (compatible with M12-5 pole female)
	M12-8 pole male on receiver
Optical data	
Light emission (λ)	Infrared, LED (880 nm)
Resolution	315 - 515 mm
Operating distance	0.5…50 m
Ambient light rejection	According to IEC-61496-2:2013
Mechanical data	
Operating temperature	10…+ 55 °C
Storage temperature	- 25…+ 70 °C
Humidity range	15…95% (no condensation)
Protection class	IP65 (EN 60529:2000)
Weight	1.2 kg max / meter for each single unit
Housing material	Painted aluminium (yellow RAL 1003)
Front glass material	PMMA
Cap material	PC Lexan 943A

More information

For more information, e.g. the complete technical information, see product manual for:
Orion2 Base 2TLC172288M0201

Connection diagrams

For Orion2 Base connection diagrams please see https://library.abb.com/

Dimension drawings

Orion2 Base

Orion2 Base

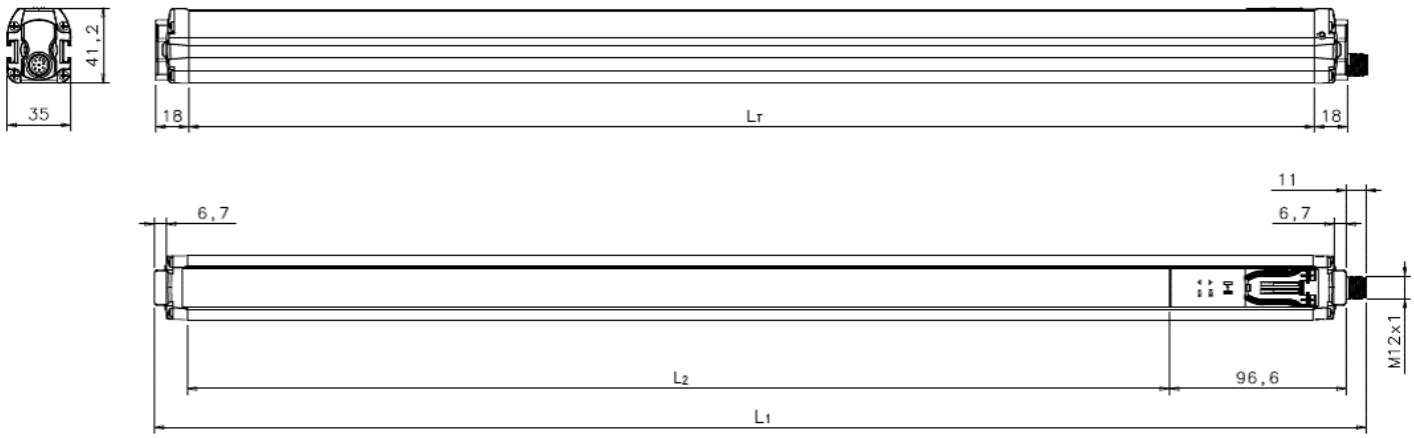

All dimensions in mm

Dimension

Lr mm	L1 mm	L2 mm	Type
617	664	538.4	Orion2-4-K2-050-B
917	964	838.4	Orion2-4-K3-080-B
1017	1064	938.4	Orion2-4-K4-090-B
1317	1364	1238.4	Orion2-4-K4-120-B

xx = Resolution

Safety light grid
Orion2 Extended

Orion2 Extended is a compact light grid for access protection in muting applications.

The light grid has 2-4 beams and is intended for body detection.



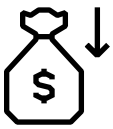

Cost effective solution

Integrated muting function
Muting sensors are connected directly to the light grid, with no need for a remote muting module.

Minimized cabling
A local reset button can be connected directly to the light grid, eliminating the need for cable between the reset button and the electrical cabinet.

External device monitoring (EDM)
Each light grid can monitor the actuators without any extra control module.



Easy to install

Alignment help
Alignment help and a wide angle within the limits of a Type 4 device facilitate installation.

Easy adjustment
Rotation brackets makes alignment easy.

Fast connection
M12 connectors speed up cabling.



Continuous operation

Protection in harsh environments
The housing is IP65 rated, and protective tubes and lens shields are available to provide further protection for the device in harsh environments.

Features
Orion2 Extended

Muting
Orion2 Extended is intended for muting applications. By connecting muting sensors to the light guard, it can distinguish material from persons and allow the material to pass through an opening but not persons. Muting sensors and a connection box for muting are available to simplify the muting application.

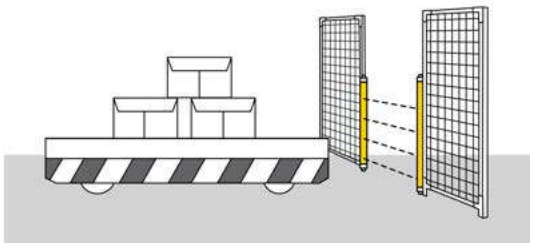

EDM
External Device Monitoring is a feature allowing the light guard to supervise the actuators in simpler applications, eliminating the need for a safety relay or programmable safety controller.

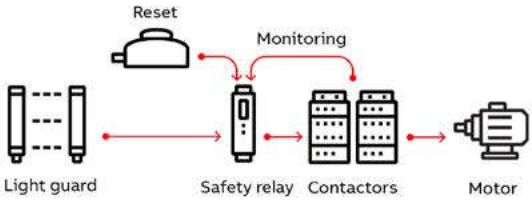

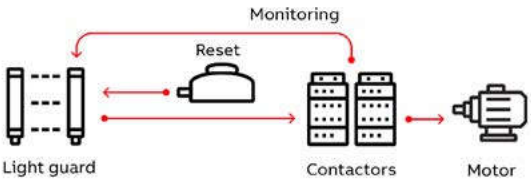

Local reset
A local reset button is connected directly to the light guard instead of to the safety control module in the electrical cabinet. This saves safety relays/PLC inputs and minimizes cabling to the electrical cabinet. Clever accessories makes the connection easier.



Ordering information

Orion2 Extended



2TLC172798F0201

Orion2 Extended

Ordering details

Resolution (Detection) mm	Protected height mm	Type (Transmitter + receiver)	Order code
Body	500 (2 beams)	Orion2-4-K2-050-E	2TLA022305R0000
	800 (3 beams)	Orion2-4-K3-080-E	2TLA022305R0100
	900 (4 beams)	Orion2-4-K4-090-E	2TLA022305R0200
	1200 (4 beams)	Orion2-4-K4-120-E	2TLA022305R0300



2TLC172781F0201

JSM Orion01

Spare parts (included when ordering Orion)

Description	Type	Order code
4 standard brackets for Orion1 & Orion2	JSM Orion01	2TLA022310R0000

Accessories
Orion2 Extended



OMC1



Mute R2

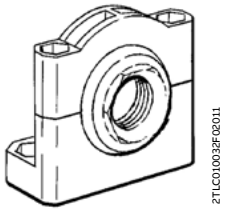

JSM 64



Reflect 2



Smile 11 RB



Orion Laser pointer

Connection Accessories

Description	Type	Order code
Connection box for two or four muting sensors	OMC1	2TLA022316R2000
Retroreflex photoelectric sensor	Mute R2	2TLA022044R0500
Adjustable mounting bracket for M18 sensors (e.g. Mute R2).	JSM 64	2TLA040007R0200
Reflector diameter 63 mm	Reflect 1	2TLA022044R2000
Reflector diameter 82 mm	Reflect 2	2TLA022044R3000
Smile reset button with NO contact	Smile 11 RA	2TLA030053R0000
Smile reset button with NO contact for Pluto	Smile 11 RB	2TLA030053R0100
Smile reset button with NC contact for Orion2 Base/Extended and Orion3 Extended	Smile 11RO2	2TLA022316R3100
Y-connector for series connection of DYNlink devices with M12-5 connectors, e.g. Eden	M12-RA	2TLA020055R0000
Y-connector for connection of a Smile reset button to Orion	M12-3R	2TLA022316R0000
Y-connector for easy connection of a transmitter	M12-3D	2TLA020055R0300
Adaptation of OSSD to DYNlink. M12-8 connector for OSSD and M12-5 for DYNlink.	Tina 10A v2	2TLA020054R1210
Adaptation of OSSD to DYNlink with possibility to connect a local reset button. M12-8 connector for OSSD and M12-5 connector for DYNlink and reset button..	Tina 10B v2	2TLA020054R1310
Adaptation of OSSD to DYNlink with possibility to power the transmitter. M12-8 connector for OSSD and M12-5 connector for DYNlink and transmitter.	Tina 10C v2	2TLA020054R1610
Mounting accessories		
Orion Test Piece 14 mm	Orion TP-14	2TLA022310R5200
Orion Test Piece 30 mm	Orion TP-30	2TLA022310R5300
Orion Laser pointer	Orion Laser	2TLA022310R5000
JSM M5B special T-nut M5 to be used with M5x12 screw for mounting Orion on Quick-Guard	T-nut JSM M5B	2TLA040035R0400
4 standard brackets for Orion1 & Orion2	JSM Orion01	2TLA022310R0000
4 rotation brackets for Orion2	JSM Orion04	2TLA022310R0200
Kit for mounting of Orion1 & Orion2 in Stand (4 pieces for lengths shorter than 1200 mm)	JSM Orion06	2TLA022310R0400
Kit for mounting of Orion1 & Orion2 in Stand (6 pieces for lengths of 1200 mm or more)	JSM Orion07	2TLA022310R0500
Orion Plate kit for adjustment of protective stand	Orion Stand Plate	2TLA022312R5000
Deviating mirror in stand for Orion 2 and 3	Orion Mirror*	
Protective stand	Orion Stand*	
Protective tube	Orion WET*	
Lens shield	Orion Shield*	

*These accessories are available in different sizes. For more information see:
Orion Mirror 2TLC172060L0201,,Orion Stand 2TLC172059L0201, Orion WET 2TLC172061L0201, Orion Shield 2TLC172071L0201

For more information about the connection accessories, please see:
Orion connection accessories 2TLC172101L0201

How to choose correct reset button

Local or global reset	Adaption to DYNlink*	Safety controle module	Type	Useful connection accessories
Local reset button connected to the light guard	Yes	Vital or Pluto	Smile 11RO2	Tina 10B: OSSD to DYNlink + local reset button M12-3A: Serial connection of DYNlink
(Orion in manual reset mode)	No	Any safety control module compatible with light guard	Smile 11RO2	M12-3R: Easy connection of a local reset button
Global reset button connected to the control module	Yes	Vital	Smile 11 RA	Tina 10A: OSSD to DYNlink Tina 10C: OSSD to DYNlink + supply to transmitter
(Orion in automatic reset mode)		Pluto	Smile 11 RB	Tina 10A: OSSD to DYNlink Tina 10C: OSSD to DYNlink + supply to transmitter
	No	Any safety control module compatible with light guard	Smile 11 RA**	-

* The ABB Jokab Safety DYNlink solution offers the following advantages:
- Serial connection of safety devices while maintaining PLe/cat. 4, up to 25 Tina 10 per Vital and up to 5 Tina 10 per Pluto input.
- Only one safety input of the Pluto instead of two with the standard OSSD outputs.

** Smile 11 RA has one NO contact, which is the most common for reset buttons. Please check what is requested for the chosen safety control module.

Cables

Orion2 Extended


2TLC172951F0201

M12-C61


2TLC010003F0201

M12-C61HE


2TLC172931F0201

M12-C334

Cable with connectors

Connector	Female/male	Length	Special feature	Type	Order code
M12-5	Female	3 m		M12-C31	2TLA020056R0500
	(b)	6 m		M12-C61	2TLA020056R0000
			Harsh environment, halogen free	M12-C61HE	2TLA020056R8000
		10 m		M12-C101	2TLA020056R1000
			Harsh environment, halogen free	M12-C101HE	2TLA020056R8100
		20 m		M12-C201	2TLA020056R1400
	Female + male	0.3 m		M12-C0312	2TLA020056R5800
	(a)	0.06 m		M12-C00612	2TLA020056R6300
		1 m		M12-C112	2TLA020056R2000
		3 m		M12-C312	2TLA020056R2100
		6 m		M12-C612	2TLA020056R2200
		10 m		M12-C1012	2TLA020056R2300
		16 m		M12-C1612	2TLA020056R5400
		20 m		M12-C2012	2TLA020056R2400
	Male	6 m		M12-C62	2TLA020056R0200
	(c)	10 m		M12-C102	2TLA020056R1200
M12-8	Female	3 m		M12-C33	2TLA020056R2900
	(d)	6 m		M12-C63	2TLA020056R3000
		10 m		M12-C103	2TLA020056R4000
		20 m		M12-C203	2TLA020056R4100
	Female + male	0.06 m		M12-C00634[1]	2TLA020056R6400
	(e)	1 m		M12-C134[1]	2TLA020056R5000
		3 m		M12-C334[1]	2TLA020056R5100
M12-8 female - M12-5 male	Female + male	1		M12-CYMUTE[2]	2TLA022316R0100

Letters (a, b, c, d, e) refer to cables in connection examples, e.g:
2TLC010002T0001 Connection diagram Orion_cables_Tina10_M12-3A_M12-3D

1) Used for the connection to Tina 10, M12 3D and M12-3R. Tina 10 can be connected directly to the light guard without cable, but will form an angle (i.e. not be aligned) with the light guard, which might be a problem if the light guard is mounted close to a wall/aluminum profile.

2) M12-CYMUTE is used to simplify the connection of 2 or 4 muting sensors with the help of the OMC1 connection box.


2TLC172657F0201

M12-C01


2TLC010038F0201

C5 cable

Separate cables and connectors

Description		Type	Order code
Connectors			
	M12-5 pole female, straight	M12-C01	2TLA020055R1000
	M12-5 pole male, straight	M12-C02	2TLA020055R1100
	M12-8 pole female, straight	M12-C03	2TLA020055R1600
	M12-8 pole male, straight	M12-C04	2TLA020055R1700
Cable with 5 conductors			
	10 m cable with 5 x 0.34 shielded conductors	C5 cable 10 m	2TLA020057R0001
	50 m cable with 5 x 0.34 shielded conductors	C5 cable 50 m	2TLA020057R0005
	100 m cable with 5 x 0.34 shielded conductors	C5 cable 100 m	2TLA020057R0010
	200 m cable with 5 x 0.34 shielded conductors	C5 cable 200 m	2TLA020057R0020
	500 m cable with 5 x 0.34 shielded conductors	C5 cable 500 m	2TLA020057R0050
Cable with 8 conductors			
	50 m cable with 8 x 0.34 shielded conductors	C8 cable 50 m	2TLA020057R1005
	100 m cable with 8 x 0.34 shielded conductors	C8 cable 100 m	2TLA020057R1010
	200 m cable with 8 x 0.34 shielded conductors	C8 cable 200 m	2TLA020057R1020
	500 m cable with 8 x 0.34 shielded conductors	C8 cable 500 m	2TLA020057R1050

Connection examples

Orion2 Extended

Orion with Tina 10A/C

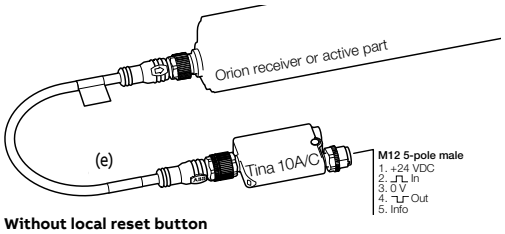

Without local reset button

Connection to the ABB Jokab Safety DYNlink signal via Tina 10 A/C. To be used with Vital safety control module or Pluto programmable safety controller.

Reset to Orion with Tina 10B

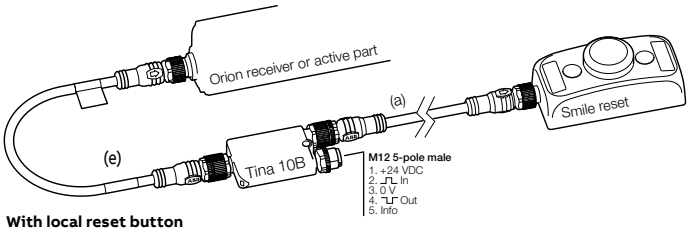

With local reset button

Connection to the ABB Jokab Safety DYNlink signal via Tina 10B. To be used with Vital safety control module or Pluto programmable safety controller.

Reset to Orion with M12-3R

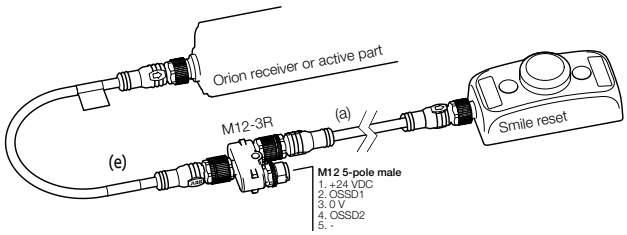

Connection of a local reset button via M12-3R.

Connection of muting sensors with M12-CYMUTE and OMC1

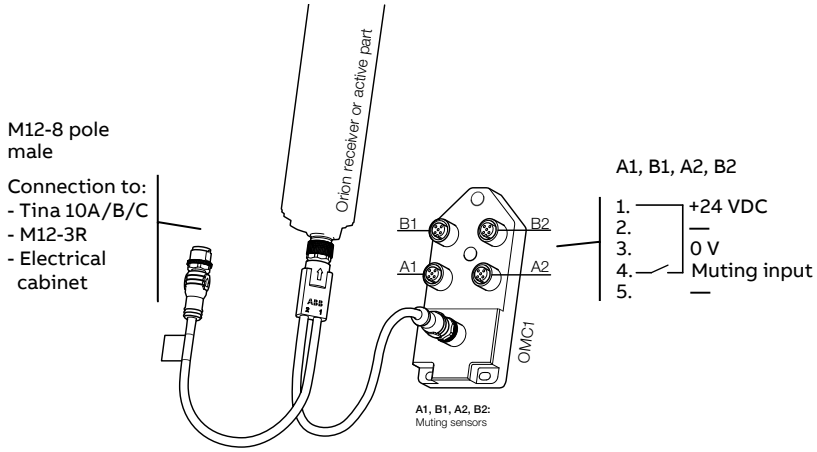

NB: Cable with M12-5 male + female connectors shall be used between muting sensors and OMC1 inputs A1, B1, A2, B2.

Connection diagrams

For Orion2 Extended connection diagrams please see https://library.abb.com/

Technical data

Orion2 Extended

Technical data	
Approvals	
Conformity	CE 2006/42/EC - Machinery 2004/108/EC - EMC EN ISO 13849-1:2008, EN 62061:2005/A1:2013, EN 61496-1:2013, EN 61496-2, EN 61508-1:2010, EN 61508-2:2010, EN 61508-3:2010, EN 61508-4:2010
Functional safety data	
EN 61508:2010	SIL3, PFH_D = 2.64 x 10^{-9}
EN 62061:2005+A1:2013	SILCL3, PFH_D = 2.64 x 10^{-9}
EN ISO 13849-1:2008	PL e, Cat. 4, PFH_D = 2.64 x 10^{-9}
Electrical data	
Internal capacitance	23 nF (Transmitter) / 120 nF (Receiver)
Power supply	+24 VDC ± 20% (SELV/PELV)
Power consumtion, Transmitter	0.5 W during normal operation
Power consumption, Receiver	2 W during normal operation
Outputs	2 PNP
Short-circuit protection	Max 1.4 A at 55 °C, min 1.1 A at -10 °C
Output current	0.5 A max / output
Leakage current	< 1 mA
Capacitive load (pure)	65 nF max at 25 °C
Resistive load (pure)	56 Ω min at +24 VDC
Current for external lamp	20 mA min, 250 mA max
Response time	2 and 3 beams: 14 ms; 4 beams: 16 ms
Connectors	M12-4 pole male on transmitter (compatible with M12-5 pole female)
	M12-8 pole male on receiver
Optical data	
Light emission (λ)	Infrared (880 nm)
Resolution	315 - 515 mm
Operating distance	0.5…50 m
Ambient light rejection	According to IEC-61496-2:2013
Mechanical data	
Operating temperature	- 10…+ 55 °C
Storage temperature	- 25…+ 70 °C
Humidity range	15…95% (no condensation)
Protection class	IP65 (EN 60529:2000)
Weight	1.2 kg max / meter for each single unit
Housing material	PC Lexan 943A
Lens material	PMMA
Cap material	PC MAKROLON

More information

For more information, e.g. the complete technical information, see manual for:
Orion2 Extended 2TLC172291M0201

Connection diagrams

For Orion2 Extended connection diagrams please see https://library.abb.com/

Dimension drawings

Orion2 Extended

Orion2 Extended

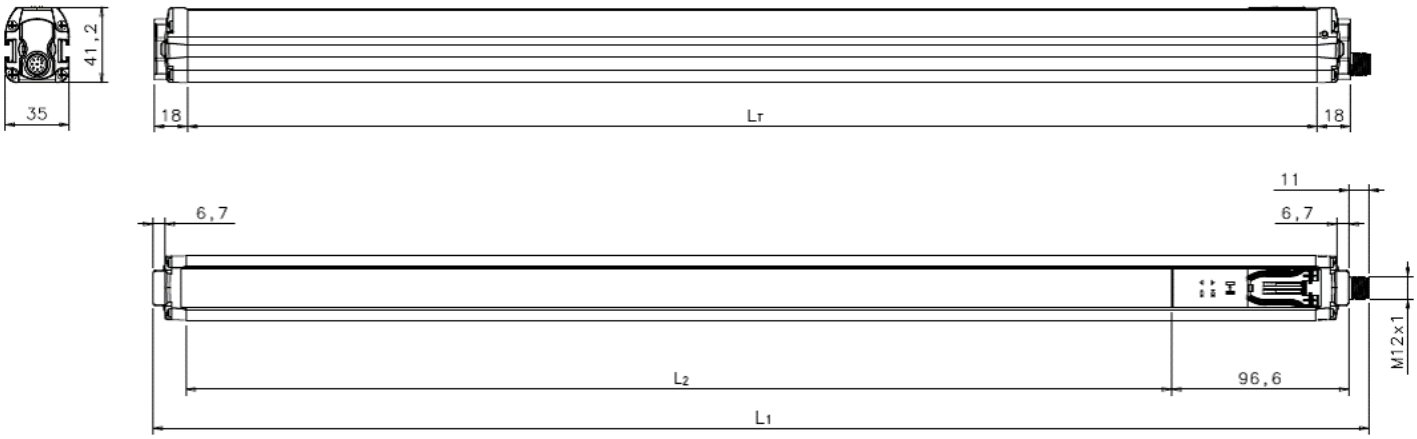

All dimensions in mm

Dimension

Lr mm	L1 mm	L2 mm	Type
617	664	538.4	Orion2-4-K2-050-E
917	964	838.4	Orion2-4-K3-080-E
1017	1064	938.4	Orion2-4-K4-090-E
1317	1364	1238.4	Orion2-4-K4-120-E

Safety light grid
Orion3 Base

Orion3 Base is a light grid with a sturdy profile for access protection.

Only one of the parts needs power supply, since both transmitter and receiver are in the same active part. The other part is passive with mirrors to reflect the beams.

With 2-4 beams and an operating range of up to 8 m, it is intended for body detection.



Easy to install

Alignment help
Alignment help and a wide angle within the limits of a Type 4 device facilitate installation.

Easy adjustment
Rotation brackets makes alignment easy.

Fast connection
M12 connectors speed up cabling.

Less cabling
Only the active part needs connecting.

Cost effective solution

Minimized cabling
A local reset button can be connected directly to the light grid, eliminating the need for cable between the reset button and the electrical cabinet or for an extra control module.

External device monitoring
Each light grid can monitor the actuators without any extra control module (EDM function).

Continuous operation

Visible alignment level
Since the alignment level is displayed, the alignment can be improved before the occurrence of an unwanted stop.

Extensive error indication
Extensive error indication reduces troubleshooting time.

Features
Orion3 Base

Features

Sturdy profile for demanding applications
With its thicker and sturdier profile Orion3 is suitable for applications with tougher requirements.



Power on one side
Both transmitter and receiver is in one active part, and the other part is passive containing mirrors. This simplifies installation and saves cables, making it easier to place in applications where cables needs to be avoided.

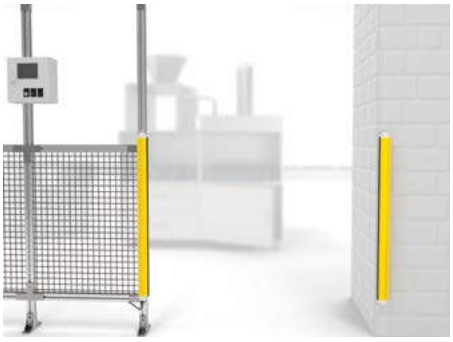

EDM
External Device Monitoring is a feature allowing the light guard to supervise the actuators in simpler applications, eliminating the need for a safety relay or programmable safety controller.

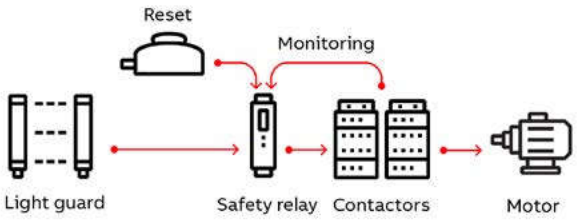

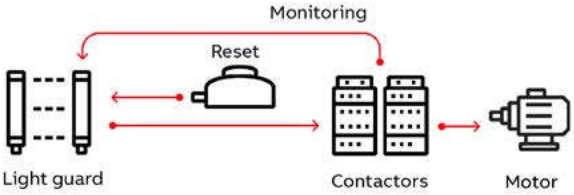

Local reset
A local reset button is connected directly to the light guard instead of to the safety control module in the electrical cabinet. This saves safety relays/PLC inputs and minimizes cabling to the electrical cabinet. Clever accessories makes the connection easier.



Ordering information

Orion3 Base



2TLC172804F0201

Orion3 Base

Ordering details

Detection	Protected height mm	Active or passive part	Type	Order code
Body	500 (2 beams)	Active part	Orion3-4-K1C-050-B	2TLA022306R0000
		Passive part	Orion3-4-M1C-050	2TLA022306R1000
	800 (3 beams)	Active part	Orion3-4-K2C-080-B	2TLA022306R0100
		Passive part	Orion3-4-M2C-080	2TLA022306R1100
	900 (4 beams)	Active part	Orion3-4-K2C-090-B	2TLA022306R0200
		Passive part	Orion3-4-M2C-090	2TLA022306R1300
	1200 (4 beams)	Active part	Orion3-4-K2C-120-B	2TLA022306R0300
		Passive part	Orion3-4-M2C-120	2TLA022306R1400



2TLC172779F0201

JSM Orion02

Spare parts (included when ordering Orion)

Description	Type	Order code
4 standard brackets for Orion3	JSM Orion02	2TLA022310R1000

Accessories
Orion3 Base



Orion Laser pointer



Smile 11 RB



M12-3R



Tina 10C

Accessories

Mounting accessories		
Description	**Type**	**Order code**
Orion Laser pointer	Orion Laser	2TLA022310R5000
JSM M5B special T-nut M5 to be used with M5x12 screw for mounting Orion on Quick-Guard	T-nut JSM M5B	2TLA040035R0400
4 standard brackets for Orion3	JSM Orion05	2TLA022310R0300
Kit for mounting of Orion3 in Stand (4 pieces for lengths shorter than 1200 mm)	JSM Orion08	2TLA022310R0600
Kit for mounting of Orion3 in Stand (6 pieces for lengths of 1200 mm or more)	JSM Orion09	2TLA022310R0700
Orion Plate kit for adjustment of protective stand	Orion Stand Plate	2TLA022312R5000
Deviating mirror in stand for Orion 2 and 3	Orion Mirror*	
Protective stand	Orion Stand*	
Connection accessories		
Smile reset button with NO contact	Smile 11 RA	2TLA030053R0000
Smile reset button with NO contact for Pluto	Smile 11 RB	2TLA030053R0100
Smile reset button with NC contact for Orion3 Base	Smile 11 RO3	2TLA022316R3200
Y-connector for series connection of DYNlink devices with M12-5 connectors, e.g. Eden	M12-3A	2TLA020055R0000
Y-connector for connection of a Smile reset button to Orion	M12-3R	2TLA022316R0000
Y-connector for easy connection of a transmitter	M12-3D	2TLA020055R0300
Adaptation of OSSD to DYNlink. M12-8 connector for OSSD and M12-5 for DYNlink.	Tina 10A v2	2TLA020054R1210
Adaptation of OSSD to DYNlink with possibility to connect a local reset button. M12-8 connector for OSSD and M12-5 for DYNlink and reset button.	Tina 10B v2	2TLA020054R1310
Adaptation of OSSD to DYNlink with possibility to power the transmitter. M12-8 connector for OSSD and M12-5 connector for DYNlink and transmitter.	Tina 10C v2	2TLA020054R1610

*These accessories are available in different sizes.
For more information see:
Orion Mirror 2TLC172060L0201
Orion Stand 2TLC172059L0201

For more information about the connection accessories, please see:
Orion connection accessories 2TLC172101L0201

How to choose correct reset button

Local or global reset	Adaption to DYNlink*	Safety controle module	Type	Useful connection accessories
Local reset button connected to the light guard (Orion in manual reset mode)	Yes	Vital or Pluto	Smile 11 RO3	Tina 10B: OSSD to DYNlink solution + local reset button M12-3A: Serial connection of the DYNlink solution
	No	Any safety control module compatible with light guard	Smile 11 RO3	M12-3R: Easy connection of a local reset button
Global reset button connected to the control module (Orion in automatic reset mode)	Yes	Vital	Smile 11 RA	Tina 10A: OSSD to DYNlink solution Tina 10C: OSSD to DYNlink solution + supply to transmitter/active part
		Pluto	Smile 11 RB	Tina 10A: OSSD to DYNlink solution Tina 10C: OSSD to DYNlink solution + supply to transmitter/active part
	No	Any safety control module compatible with light guard	Smile 11 RA**	-

* The ABB Jokab Safety DYNlink solution offers the following advantages:
- Serial connection of safety devices while maintaining PLe/cat. 4, up to 25 Tina 10 per Vital and up to 5 Tina 10 per Pluto input.
- Only one safety input of the Pluto instead of two with the standard OSSD outputs.

** Smile 11 RA has one NO contact, which is the most common for reset buttons. Please check what is requested for the chosen safety control module.

Cables

Orion3 Base


2TLC172951F0201

M12-C61


2TLC010003F0201

M12-C61HE


2TLC172931F0201

M12-C334

Cable with connectors

Connector	Female/male	Length	Special feature	Type	Order code
M12-5	Female	3 m		M12-C31	2TLA020056R0500
	(b)	6 m		M12-C61	2TLA020056R0000
			Harsh environment, halogen free	M12-C61HE	2TLA020056R8000
		10 m		M12-C101	2TLA020056R1000
			Harsh environment, halogen free	M12-C101HE	2TLA020056R8100
		20 m		M12-C201	2TLA020056R1400
	Female + male	0.3 m		M12-C0312	2TLA020056R5800
	(a)	0.06 m		M12-C00612	2TLA020056R6300
		1 m		M12-C112	2TLA020056R2000
		3 m		M12-C312	2TLA020056R2100
		6 m		M12-C612	2TLA020056R2200
		10 m		M12-C1012	2TLA020056R2300
		16 m		M12-C1612	2TLA020056R5400
		20 m		M12-C2012	2TLA020056R2400
	Male	6 m		M12-C62	2TLA020056R0200
	(c)	10 m		M12-C102	2TLA020056R1200
M12-8	Female	3 m		M12-C33	2TLA020056R2900
	(d)	6 m		M12-C63	2TLA020056R3000
		10 m		M12-C103	2TLA020056R4000
		20 m		M12-C203	2TLA020056R4100
	Female + male	0.06 m		M12-C00634	2TLA020056R6400
		1 m		M12-C134	2TLA020056R5000
		3 m		M12-C334	2TLA020056R5100
		0,2 m		M12-CTO3B [1]	2TLA022315R3200

Letters (a, b, c, d, t_2) refer to cables in connection examples, e.g:
2TLC010002T0002 Connection diagram Cables Orion3 to Tina10

1) M12-CTO3B (t_2) can be used for: - connection of Orion3 Base to Tina 10A/B/C.
- connection of Orion 3 Base to M12-3R.

The EDM function is deactivated in all cases


2TLC172657F0201

M12-C01


2TLC010038F0201

C5 cable

Separate cables and connectors

Description	Type	Order code
Connectors		
M12-5 pole female, straight	M12-C01	2TLA020055R1000
M12-5 pole male, straight	M12-C02	2TLA020055R1100
M12-8 pole female, straight	M12-C03	2TLA020055R1600
M12-8 pole male, straight	M12-C04	2TLA020055R1700
Cable with 5 conductors		
10 m cable with 5 x 0.34 shielded conductors	C5 cable 10 m	2TLA020057R0001
50 m cable with 5 x 0.34 shielded conductors	C5 cable 50 m	2TLA020057R0005
100 m cable with 5 x 0.34 shielded conductors	C5 cable 100 m	2TLA020057R0010
200 m cable with 5 x 0.34 shielded conductors	C5 cable 200 m	2TLA020057R0020
500 m cable with 5 x 0.34 shielded conductors	C5 cable 500 m	2TLA020057R0050
Cable with 8 conductors		
50 m cable with 8 x 0.34 shielded conductors	C8 cable 50 m	2TLA020057R1005
100 m cable with 8 x 0.34 shielded conductors	C8 cable 100 m	2TLA020057R1010
200 m cable with 8 x 0.34 shielded conductors	C8 cable 200 m	2TLA020057R1020
500 m cable with 8 x 0.34 shielded conductors	C8 cable 500 m	2TLA020057R1050

Connection examples

Orion3 Base

Orion with Tina 10A/C

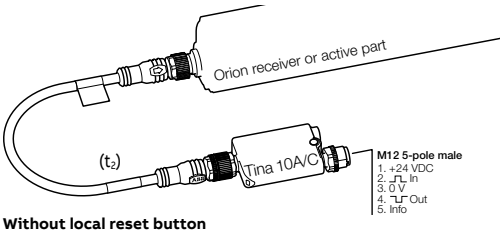

Without local reset button

Connection to the ABB Jokab Safety DYNlink signal via Tina 10 A/C. To be used with Vital safety control module or Pluto programmable safety controller.

Reset to Orion with Tina 10B

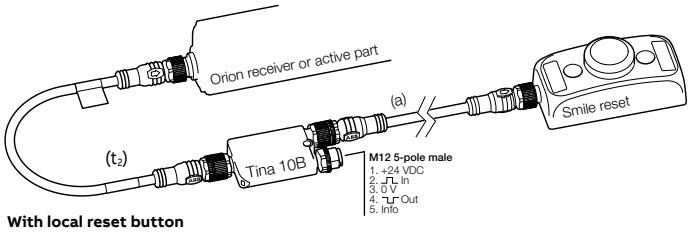

With local reset button

Connection to the ABB Jokab Safety DYNlink signal via Tina 10B. To be used with Vital safety control module or Pluto programmable safety controller.

Reset to Orion with M12-3R

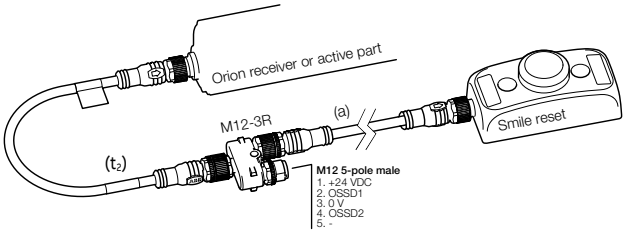

Connection of a local reset button via M12-3R.

Connection diagrams

For Orion3 Base connection diagrams please see https://library.abb.com/

Technical data

Orion3 Base

Technical data	
Approvals	
Conformity	CE 2006/42/EC - Machinery 2004/108/EC - EMC EN ISO 13849-1:2008, EN 62061:2005/A1:2013, EN 61496-1:2013, EN 61496-2, EN 61508-1:2010, EN 61508-2:2010, EN 61508-3:2010, EN 61508-4:2010
Functional safety data	
EN 61508:2010	SIL3, PFH_D = 9.28 x 10^{-9}
EN 62061:2005+A1:2013	SILCL3, PFH_D = 9.28 x 10^{-9}
EN ISO 13849-1:2008	PL e, Cat. 4, PFH_D = 9.28 x 10^{-9}
Electrical data	
Power supply	+24 VDC ±20 %
Power consumption, Active unit	6.5 W max (without load)
Cable length (for power supply)	70 m max
Outputs	2 PNP
Short-circuit protection	1.4 A max
Output current	0.5 A max / output
Output voltage – ON	Power supply value less 1 V (min)
Output voltage – OFF	0.2 V max
Capacitive load	2.2 µF at +24 VDC max
Cable length (for power supply)	70 m max
Connectors	M12-8 pole male on receiver
Optical data	
Light emission (λ)	Infrared, LED (950 nm)
Resolution	319.75 - 519.75 mm
Operating distance	0.5...8 m except K2C-090: 0.5...6.5 m
Ambient light rejection	According to IEC-61496-2:2013
Mechanical data	
Operating temperature	0...+ 55 °C
Storage temperature	- 25...+ 70 °C
Humidity range	15...95% (no condensation)
Protection class	IP65 (EN 60529:2000)
Weight	
Orion3-4-K1C-050-B	1.3 kg
Orion3-4-K2C-080-B	1.8 kg
Orion3-4-K2C-090-B	2.1 kg
Orion3-4-K2C-120-B	2.6 kg
Orion3-4-M1C-050 (passive)	1.2 kg
Orion3-4-M2C-080 (passive)	1.7 kg
Orion3-4-M2C-090 (passive)	1.9 kg
Orion3-4-M2C-120 (passive)	2.5 kg
Housing material	Painted aluminium (yellow RAL 1003)
Cap material	PBT Valox 508
Lens material	PMMA

More Information

For more information about the connection accessories, see manual for:
Orion3 Base 2TLC172289M0201

Connection diagrams

For Orion3 Base connection diagrams please see https://library.abb.com/

Dimension drawings

Orion3 Base

Orion3 Base

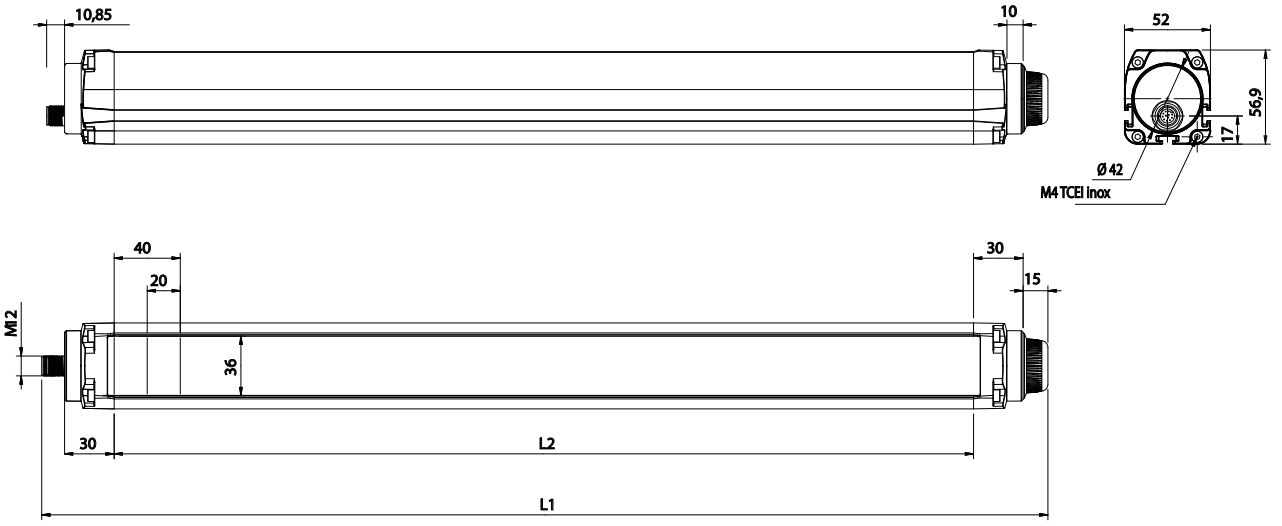

Active part – All dimensions in mm

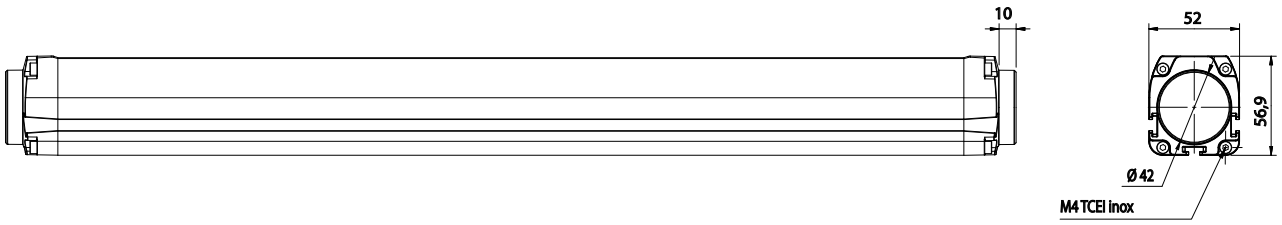

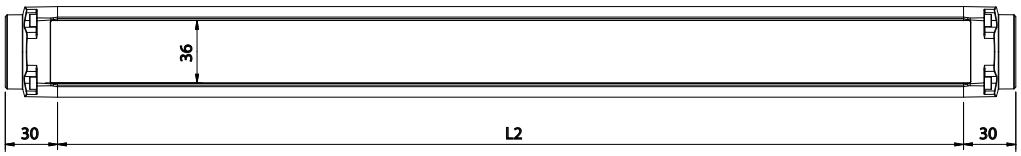

Passive part – All dimensions in mm

Dimensions

L1 mm	L2 mm	Type
606.4	520.5	Orion3-4-K1C-050-B (active part)
906.4	820.5	Orion3-4-K2C-080-B (active part)
1006.4	920.5	Orion3-4-K2C-090-B (active part)
1306.4	1220.5	Orion3-4-K2C-120-B (active part)
580.5	520.5	Orion3-4-M1C-050 (passive part)
880.5	820.5	Orion3-4-M2C-080 (passive part)
980.5	920.5	Orion3-4-M2C-090 (passive part)
1280.5	1220.5	Orion3-4-M2C-090 (passive part))

xx = Resolution

Safety light grid
Orion3 Extended

Orion3 Extended is a sturdy light grid for access protection in muting applications.

Only one of the parts needs power supply, since both transmitter and receiver are in the same active part. The other part is passive and contains mirrors to reflect the beams.

With 2-4 beams and an operating range of up to 8 m, it is intended for body detection.



Cost effective solution

Integrated muting function
Muting sensors are connected directly to the light grid, with no need for a remote muting module.

Minimized cabling
A local reset button can be connected directly to the light grid, eliminating the need for cable between the reset button and the electrical cabinet.

External device monitoring (EDM)
Each light grid can monitor the actuators without any extra control module.

Easy to install

Alignment help
Alignment help and a wide angle within the limits of a Type 4 device facilitate installation.

Easy adjustment
Rotation brackets makes alignment easy.

Fast connection
M12 connectors speed up cabling.

Less cabling
Only the active part needs connecting.

Continuous operation

Visible alignment level
Since the alignment level is displayed, the alignment can be improved before the occurrence of an unwanted stop.

Extensive error indication
Extensive error indication reduces troubleshooting time.

Applications and features
Orion3 Extended

Application

Muting
Orion2 Extended is intended for muting applications. By connecting muting sensors to the light guard, it can distinguish material from persons and allow the material to pass through an opening but not persons. Muting sensors and a connection box for muting are available to simplify the muting application.

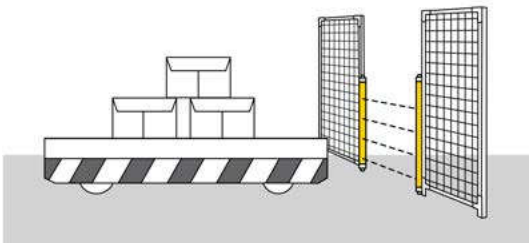

Features

Power on one side
Both transmitter and receiver are in one active part, and the other part is passive and contains mirrors. This simplifies installation and saves cables, making it easier to place in applications where cables need to be avoided.



Sturdy profile for demanding applications
With its thicker and sturdier profile Orion3 is suitable for applications with tougher requirements.



EDM
External Device Monitoring is a feature allowing the light guard to supervise the actuators in simpler applications, eliminating the need for a safety relay or programmable safety controller.

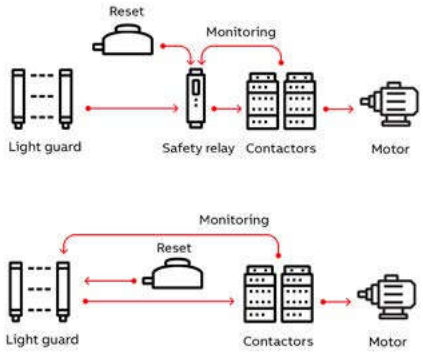

Local reset
A local reset button is connected directly to the light guard instead of to the safety control module in the electrical cabinet. This saves safety relays/PLC inputs and minimizes cabling to the electrical cabinet. Clever accessories make the connection easier.



Ordering information
Orion3 Extended



Orion3 Extended

Ordering details

Detection	Protected height mm	Active or passive part	Type	Order code
Body	500 (2 beams)	Active part	Orion3-4-K1C-050-E	2TLA022307R0000
		Passive part	Orion3-4-M1C-050	2TLA022306R1000
	800 (3 beams)	Active part	Orion3-4-K2C-080-E	2TLA022307R0100
		Passive part	Orion3-4-M2C-080	2TLA022306R1100
	900 (4 beams)	Active part	Orion3-4-K2C-090-E	2TLA022307R0200
		Passive part	Orion3-4-M2C-090	2TLA022306R1300
	1200 (4 beams)	Active part	Orion3-4-K2C-120-E	2TLA022307R0300
		Passive part	Orion3-4-M2C-120	2TLA022306R1400

Please note that active and passive parts are ordered separately and both are necessary for Orion3 Extended to function.



JSM Orion02

Spare parts (included when ordering Orion

Description	Type	Order code
4 standard brackets for Orion3	JSM Orion02	2TLA022310R1000

Accessories
Orion3 Extended



OMC1



Mute R2



Reflect 2

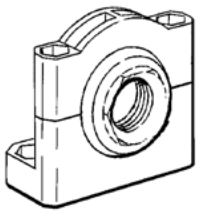

JSM 64



Smile 11 RB



Tina 10B



Orion Laser pointer

Accessories

Connection accessories		
Description	**Type**	**Order code**
Connection box for two or four muting sensors	OMC1	2TLA022316R2000
Retroreflex photoelectric sensor	Mute R2	2TLA022044R0500
Adjustable mounting bracket for M18 sensors (e.g. Mute R2).	JSM 64	2TLA040007R0200
Reflector diameter 63 mm	Reflect 1	2TLA022044R2000
Reflector diameter 82 mm	Reflect 2	2TLA022044R3000
Smile reset button with NO contact	Smile 11 RA	2TLA030053R0000
Smile reset button with NO contact for Pluto	Smile 11 RB	2TLA030053R0100
Smile reset button with NC contact for Orion2 Base/Extended and Orion3 Extended	Smile 11R02	2TLA022316R3100
Y-connector for series connection of DYNlink devices with M12-5 connectors, e.g. Eden	M12-3A	2TLA020055R0000
Y-connector for connection of a Smile reset button to Orion	M12-3R	2TLA022316R0000
Adaptation of OSSD to DYNlink. M12-8 connector for OSSD and M12-5 for DYNlink.	Tina 10A v2	2TLA020054R1210
Adaptation of OSSD to DYNlink with possibility to connect a local reset button. M12-8 connector for OSSD and M12-5 for DYNlink and reset button.	Tina 10B v2	2TLA020054R1310
Mounting accessories		
Orion Laser pointer	Orion Laser	2TLA022310R5000
JSM M5B Special T-nut M5 to be used with screw M5x12 screw for mounting Orion on QuickGuard	T-nut JSM M5B	2TLA040035R0400
4 rotation brackets for Orion3	JSM Orion05	2TLA022310R0300
Kit for mounting of Orion3 in Stand (4 pieces) - For a pair Orion3 - 050 / 080 / 090 (active + passive units)	JSM Orion08	2TLA022310R0600
For a pair Orion3 - 120 (Orion3-4-K2C-120 + Orion3-4-M2C-120)	JSM Orion09	2TLA022310R0700
Orion Plate kit for adjustment of protective stand	Orion Stand Plate	2TLA022312R5000
Deviating mirror in stand for Orion 2 and 3	Orion Mirror*	
Protective stand	Orion Stand*	
Protective tube	Orion WET*	
Lens shield	Orion Shield*	

*These accessories are available in different sizes.
For more information see:
Orion Mirror 2TLC172060L0201, Orion Stand 2TLC172059L0201, Orion WET 2TLC172061L0201, Orion Shield 2TLC172071L0201

For more information about the connection accessories, please see:
Orion connection accessories 2TLC172101L0201

How to choose correct reset button

Local or global reset	Adaption to the DYNlink solution*	Safety controle module	Type	Suitable connection accessories
Local reset button connected to the light guard (Orion in manual reset mode)	Yes	Vital or Pluto	Smile 11RO2	Tina 10B: OSSD to DYNlink + local reset button M12-3A: serial connection of DYNlink
	No	Any safety control module compatible with light guard	Smile 11RO2	M12-3R: Easy connection of a local reset button
Global reset button connected to the control module (Orion in automatic reset mode)	Yes	Vital	Smile 11 RA	Tina 10A: OSSD to DYNlink Tina 10C: OSSD to DYNlink + supply to transmitter
		Pluto	Smile 11 RB	Tina 10A: OSSD to DYNlink Tina 10C: OSSD to DYNlink + supply to transmitter
	No	Any safety control module compatible with light guard	Smile 11 RA**	-

* The ABB Jokab safety DYNlink solution offers the following advantages:
- Serial connection of safety devices while maintaining PLe/cat. 4, up to 25 Tina 10 per Vital and up to 5 Tina 10 per Pluto input.
- Only one safety input of the Pluto instead of two with the standard OSSD outputs.

** Smile 11RA has one NO contact, which is the most common for reset buttons. Please check what is requested for the chosen safety control module.

Cables
Orion3 Extended


2TLC172951F0201

M12-C61


2TLC010003F0201

M12-C61HE


2TLC172931F0201

M12-C334

Cable with connectors

Connector	Female/male	Length	Special feature	Type	Order code
M12-5	Female	3 m		M12-C31	2TLA020056R0500
	(b)	6 m		M12-C61	2TLA020056R0000
			Harsh environment, halogen free	M12-C61HE	2TLA020056R8000
		10 m		M12-C101	2TLA020056R1000
			Harsh environment, halogen free	M12-C101HE	2TLA020056R8100
		20 m		M12-C201	2TLA020056R1400
	Female + male	0.3 m		M12-C0312	2TLA020056R5800
	(a)	0.06 m		M12-C00612	2TLA020056R6300
		1 m		M12-C112	2TLA020056R2000
		3 m		M12-C312	2TLA020056R2100
		6 m		M12-C612	2TLA020056R2200
		10 m		M12-C1012	2TLA020056R2300
		16 m		M12-C1612	2TLA020056R5400
		20 m		M12-C2012	2TLA020056R2400
	Male	6 m		M12-C62	2TLA020056R0200
	(c)	10 m		M12-C102	2TLA020056R1200
M12-8	Female	3 m		M12-C33	2TLA020056R2900
	(d)	6 m		M12-C63	2TLA020056R3000
		10 m		M12-C103	2TLA020056R4000
		20 m		M12-C203	2TLA020056R4100
	Female + male	0.06 m		M12-C00634[1]	2TLA020056R6400
		1 m		M12-C134[1]	2TLA020056R5000
		3 m		M12-C334[1]	2TLA020056R5100
M12-8 female + M12-5 male	Female + male	1		M12-CYMUTE[2]	2TLA022316R0100

Letters (a, b, c, d, t_2) refer to cables in connection examples, e.g:
2TLC010002T0002 Connection diagram Cables Orion3 to Tina10

1) These cables (t_2) are used for the connection to Tina 10, M12 3D and M12-3R. Tina 10 can be connected directly to the light guard without cable, but will form an angle (i.e. not be aligned) with the light guard, which might be a problem if the light guard is mounted close to a wall/aluminum profile.

2) M12-CYMUTE is used to simplify the connection of 2 or 4 muting sensors with the help of the OMC1 connection box.


2TLC172657F0201

M12-C01


2TLC010038F0201

C5 cable

Separate cables and connectors

Description	Type	Order code
Connectors		
M12-5 pole female, straight	M12-C01	2TLA020055R1000
M12-5 pole male, straight	M12-C02	2TLA020055R1100
M12-8 pole female, straight	M12-C03	2TLA020055R1600
M12-8 pole male, straight	M12-C04	2TLA020055R1700
Cable with 5 conductors		
10 m cable with 5 x 0.34 shielded conductors	C5 cable 10 m	2TLA020057R0001
50 m cable with 5 x 0.34 shielded conductors	C5 cable 50 m	2TLA020057R0005
100 m cable with 5 x 0.34 shielded conductors	C5 cable 100 m	2TLA020057R0010
200 m cable with 5 x 0.34 shielded conductors	C5 cable 200 m	2TLA020057R0020
500 m cable with 5 x 0.34 shielded conductors	C5 cable 500 m	2TLA020057R0050
Cable with 8 conductors		
50 m cable with 8 x 0.34 shielded conductors	C8 cable 50 m	2TLA020057R1005
100 m cable with 8 x 0.34 shielded conductors	C8 cable 100 m	2TLA020057R1010
200 m cable with 8 x 0.34 shielded conductors	C8 cable 200 m	2TLA020057R1020
500 m cable with 8 x 0.34 shielded conductors	C8 cable 500 m	2TLA020057R1050

Connection examples

Orion3 Extended

Orion with Tina 10A/C

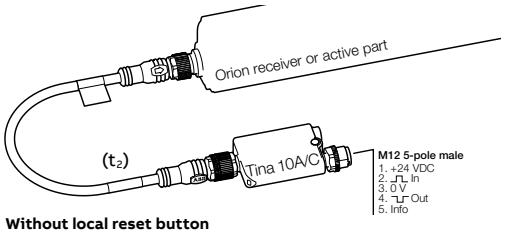

Without local reset button

Connection to the ABB Jokab Safety DYNlink signal via Tina 10 A/C. To be used with Vital safety control module or Pluto programmable safety controller.

Reset to Orion with Tina 10B

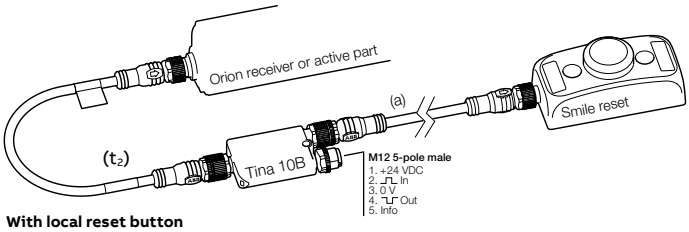

With local reset button

Connection to the ABB Jokab Safety DYNlink signal via Tina 10B. To be used with Vital safety control module or Pluto programmable safety controller.

Reset to Orion with M12-3R

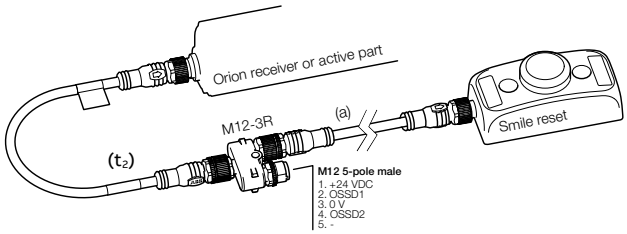

Connection of a local reset button via M12-3R.

Connection of muting sensors with M12-CYMUTE and OMC1

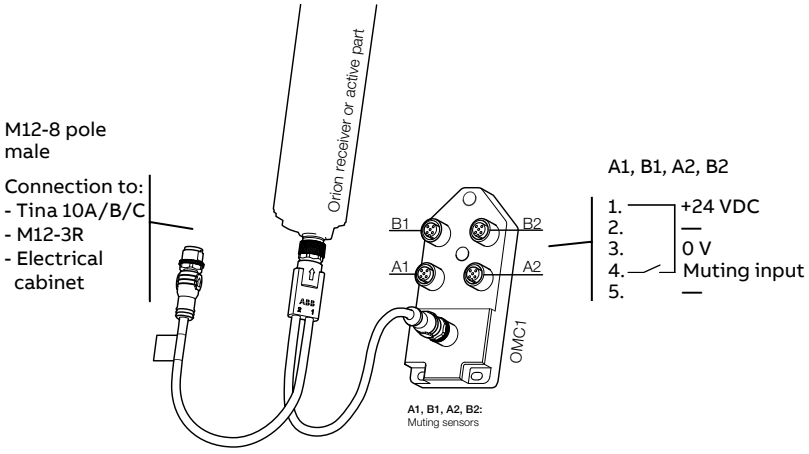

NB: Cable with M12-5 male + female connectors shall be used between muting sensors and OMC1 inputs A1, B1, A2, B2.

Connection diagrams

For Orion3 Extended connection diagrams please see https://library.abb.com/

Technical data

Orion3 Extended

Technical data	
Approvals	
Conformity	CE 2006/42/EC - Machinery 2004/108/EC - EMC EN ISO 13849-1:2008, EN 62061:2005/A1:2013, EN 61496-1:2013, EN 61496-2, EN 61508-1:2010, EN 61508-2:2010, EN 61508-3:2010, EN 61508-4:2010
Functional safety data	
EN 61508:2010	SIL3, $PFH_D = 8.57 \times 10^{-9}$
EN 62061:2005+A1:2013	SILCL3, $PFH_D = 8.57 \times 10^{-9}$
EN ISO 13849-1:2008	PL e, Cat. 4, $PFH_D = 8.57 \times 10^{-9}$
Electrical data	
Power supply	+24 VDC ± 20%
Power consumtion, Active unit	2.5 W max (without load)
Cable length (for power supply)	70 m max
Outputs	2 PNP
Short-circuit protection	1.4 A at 55 °C
Output current	0.5 A max / output
Output voltage – ON	Power supply value less 1 V (min)
Output voltage – OFF	0.2 V max
Capacitive load	2.2 µF at +24 VDC max
Current for external lamp	20 mA min, 250 mA max
Response time	K1C-050: 11 ms, others: 12 ms
Connectors	M12-4 pole male on transmitter (compatible with M12-5 pole female)
Optical data	
Light emission (λ)	Infrared (860 nm)
Resolution	319.75 - 519.75 mm
Operating distance	0.5...8 m except K2C-090: 0.5...6.5 m
Ambient light rejection	According to IEC-61496-2:2013
Mechanical data	
Operating temperature	0...+ 55 °C
Storage temperature	- 25...+ 70 °C
Humidity range	15...95% (no condensation)
Protection class	IP65 (EN 60529:2000)
Housing material	Painted aluminium
Lens material	PMMA
Cap material	PBT Valox 508
Weight	
Orion3-4-K1C-050-E	1.3 kg
Orion3-4-K2C-080-E	1.8 kg
Orion3-4-K2C-090-E	2.1 kg
Orion3-4-K2C-120-E	2.6 kg
Orion3-4-M1C-050 (passive)	1.2 kg
Orion3-4-M2C-080 (passive)	1.7 kg
Orion3-4-M2C-090 (passive)	1.9 kg
Orion3-4-M2C-120 (passive)	2.5 kg

More information

For more information about the connection accessories, see manual for:
Orion3 Extended 2TLC172292M0201

Connection diagrams

For Orion3 Extended connection diagrams please see https://library.abb.com/

Dimension drawings

Orion3 Extended

Orion3 Extended

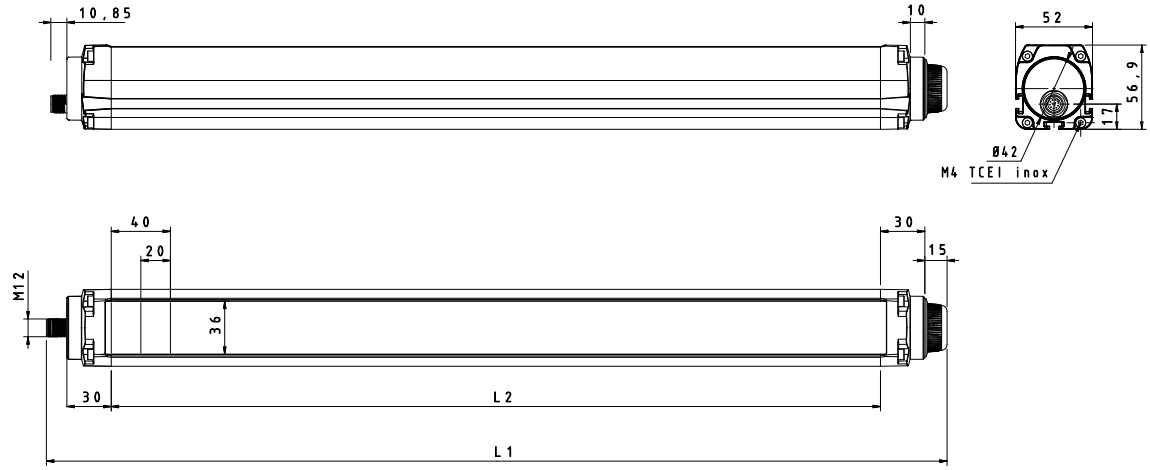

Active part - All dimensions in mm

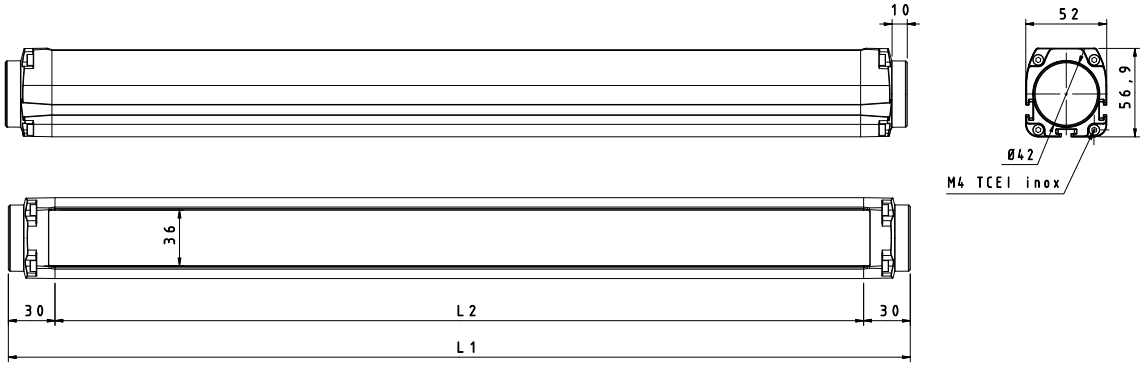

Passive part - All dimensions in mm

Dimensions

L1 mm	L2 mm	Type
606.4	520.5	Orion3-4-K1C-050-E (active part)
906.4	820.5	Orion3-4-K2C-080-E (active part)
1006.4	920.5	Orion3-4-K2C-090-E (active part)
1306.4	1220.5	Orion3-4-K2C-120-E (active part)
580.5	520.5	Orion3-4-M1C-050 (passive part)
880.5	820.5	Orion3-4-M2C-080 (passive part)
980.5	920.5	Orion3-4-M2C-090 (passive part)
1280.5	1220.5	Orion3-4-M2C-090 (passive part)


ABB
EDEN
ABB
EDEN
ABB
MKey8Z
ABB
Sense7Z
Safety Switch

Sensors and locks

4–**2** **Introduction and overview**

4–**6** **Non-contact safety sensor**
Eden

4–**16** **Safety magnetic switch**
Sense

4–**20** **Safety interlock switch**
MKey

4–**28** **Electromagnetic process lock**
Magne

4–**34** **Safety lock**
GKey

Introduction and overview
Selection guide

ABB has a full range of switches for monitoring doors and hatches, both with and without locking function.

	Eden	Sense	MKey
Image			
Function	Interlock	Interlock	Interlock and process/safety lock
Type	Non-contact switch	Magnetic non-contact switch	Mechanical switch
Description	The original non-contact sensor with unique fault-detection capabilities.	Coded magnetic switch in stainless steel for harsh environments.	A classic and well-tried solution.
Applications	Monitoring doors and hatches. Ideal for use in harsh environments. Also for monitoring of end positions of e.g. an overhead crane.	Monitoring doors and hatches in applications where a stainless steel product is required.	Monitoring doors and hatches. Also available with safe locking.
Advantage	- Flexible mounting - M12 connectors - IP69K for harsh environments - One switch to reach Cat. 4 - Unique coding to prevent defeat - Local reset minimizes cabling - Non-contact eliminates wear	- Stainless steel - IP69K for harsh environments - Extreme temperature range - Coded sensor - Non-contact eliminates wear	- Holds the door closed - Possible to lock

	Magne	GKey
Image		
Function	Interlock and process lock	Interlock and safety lock
Type	Electromagnetic lock	Mechanical safety lock
Description	A robust magnetic lock with strong holding force.	A robust safety lock with die cast housing.
Applications	Locking doors and hatches to prevent interruption of machines with short stopping time e.g. robotics applications.	Safe locking of hinged and sliding doors for machines with a long stopping time.
Advantage	- Robust design - M12 connectors.	- Safe locking - Robust design - Room to integrate 22 mm pilot devices - Rear escape release - High level coding - Lockout function - Manual unlocking (auxiliary release)

Introduction and overview
Selection orientation

The difference between locking and interlocking functions

Interlocking function
An interlocking function indicates if a door is open or closed. When the door is open the interlocking function also prevents dangerous machine functions, but it does not prevent the door from being opened.



Interlocking function e.g. Eden

Locking function
A locking function prevents the door from being opened until an unlocking signal has been sent.


Locking function e.g. Magne

When to use interlocking and locking functions
An interlocking function is required if the dangerous machine functions needs to be stopped when someone enters the dangerous area.

A locking function is required if a user can open a door/hatch and reach the dangerous machine parts before the dangerous machine functions have ceased. It is also required if the process needs to be protected from unwanted stops that would occur if a person could open a door in the middle of a critical stage of the process..

The difference between a process lock and a safety lock

All locks of the ABB Jokab Safety range can be used as process locks but only GKey and the models of MKey that uses power to unlock can be used as safety locks. Here is why:


Process lock e.g. Magne

A **process lock** protects the process. One example of an application is a lock on a door giving access to a machine with short stopping time, e.g. a welding machine. The door should not be unlocked before the end of the welding cycle. Should the door be unlocked before the end of the cycle (as a consequence of a fault in the installation like a loss of power or a short-circuit) the door could be opened, which would result in a process stop. It might take a long time to restart the process, but no person would have had time to come close to the danger or get injured. Since the lock only protects the process there is no need for a safe locking signal.


Safety lock e.g. GKey

A **safety lock** protects people. One example of an application is a lock on a door giving access to a dangerous machine with a long stopping time, e.g. a circular saw. The door should never be unlocked before the dangerous movement has stopped, not even as a consequence of a fault in the installation like a loss of power or a short-circuit. Should the door be unlocked before the machine has stopped, a person could open the door and have time to get close to the dangerous movement and get injured. Since the lock is protecting the person, the unlocking signal should be safe.
Since a loss of power should not unlock a safety lock, only locks that require power to unlock (e.g. +24 VDC) can be used as safety locks.

Non-contact safety sensor
Eden

Eden is a non-contact safety sensor used as interlocking device for e.g. doors and safe position monitoring.

Eden consists of two parts: Adam and Eva. Adam senses the presence of Eva without mechanical contact and therefore without any wear.
The compact size of Eden and its 360° mounting possibility make it easy to use in most applications.

Different models of Eden are available for different types of control modules. All Eden models make it very easy to reach PL e, often using fewer components than other solutions.

All Eden models have an IP67/IP69K sealing.



Continuous operation

Easier troubleshooting
Extensive LED indication and status information reduce downtime.

No wear, no mechanical breakage
Non-contact sensing means no mechanical wear and the large sensing tolerance gives a better tolerance to vibrations, resulting in fewer unwanted process stops.

Affordable range

Local reset function
The integrated reset function reduces the number of cables and PLC inputs.

PL e with fewer components
Series connection with PL e, local reset and DYNlink signal allow to considerably reduce the number of components needed to reach PL e.

Easy to install

Large mounting tolerance
A 360° mounting possibility with generous tolerances facilitates mounting.

Fast connection
M12 connectors, local reset and accessories speed up installation.

Applications
Eden

Applications

Doors and hatches
Eden monitors whether the hatch is open or closed. The dangerous movement is stopped as soon as the hatch is opened.



Position control
Eden can be used to monitor the position of a machine when someone is in the work area. This can be useful when removing power to the machine causes problems like a long restart time.
As long as the machine remains in the safe position monitored by Eden, a person can be allowed to enter the hazardous area even though the machine is still powered. If the machine leaves the safe position while the person is still in the hazardous area, power is removed from the machine.

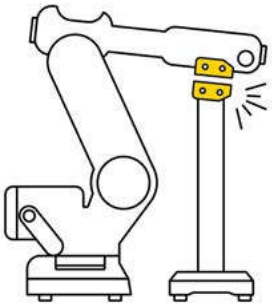

Features
Eden

Features

Easy PL e with Eden safety sensor
- Eden sensors can be connected in series while maintaining Cat. 4.
- Only one Eden per guard is necessary to reach PL e (instead of two key switches).
- Eden reaches PL e without any need for periodic checks (see ISO/TR 24119).



Low or high level coded sensor
Eva is available with General code or Unique code. If a new Adam is paired with an Eva general code at start up, Adam will accept all Eva with general code as a valid actuator. Eden will then classify as a low level coded sensor.
If a new Adam is paired with an Eva Unique code at startup, Adam will only accept this specific Eva as a valid actuator. In this case Eden is classified as a high level coded sensor. A high level coded sensor should be used when the motivation to defeat a sensor cannot be eliminated (see EN ISO 14119:2013).

360° mounting possibility
Eden offers 360° mounting possibility with generous tolerances.

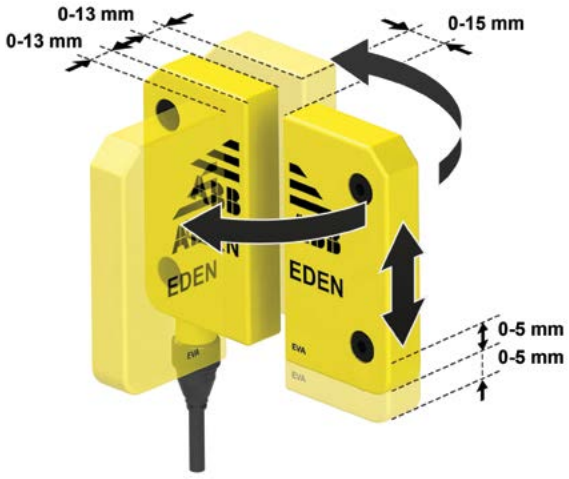

Local reset button
A local reset button with integrated LED can be connected directly to Adam Reset instead of to the safety control module. In this way, each Eden can easily have its own reset button, which saves cable length and safety relays/PLC inputs. Adam Reset monitors the reset function and manages the LED in the reset button in the following way:

on - Adam and Eva are not in contact
flashing - Adam and Eva in contact, waiting for reset
off - Adam and Eva in contact and reset

Info signal and extensive indication facilitate troubleshooting
All Eden models offer extensive LED indication to help troubleshooting and localizing which doors/hatches are opened. The LED on Adam lights in green or red depending on status:

green - valid Eva within range
red - valid Eva out of range
flashing red/green - valid Eva within range, but no valid safety signal received (loop broken “upstream”)

Simple status information with StatusBus
StatusBus is a simple and cost effective way to collect the status information of safety sensors. The StatusBus functionality is available with some DYNlink devices and allows to collect the status of each individual safety device, even when connected in series. A single input on Pluto safety PLC can collect the status of up to 30 safety devices. The devices are connected using standard cable and M12-5 connectors. No specific bus cable or extra communication module is necessary.

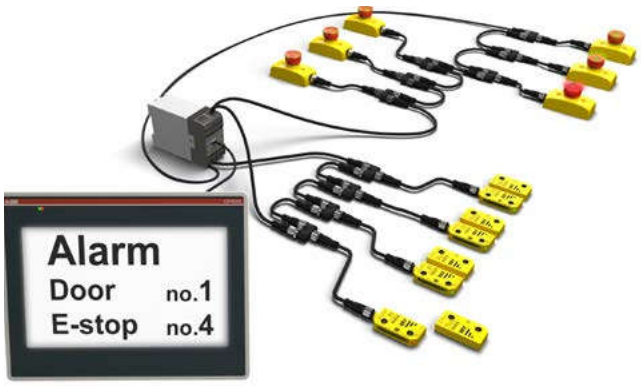

Models

Eden

Models

Eden DYN
Eden DYN consists of an Adam DYN and an Eva (general or unique code).
Adam DYN uses the ABB Jokab Safety DYNlink signal that allows to connect several safety products in series while maintaining PL e using only one channel. DYNlink signals must be used with Vital safety controller or Pluto safety PLC.
Up to 30 Adam DYN can be connected in series to Vital and up to 10 Adam DYN can be connected in series to one input of Pluto.
All products using the DYNlink signal can easily be connected in series and mixed in the same loop with a maintained PL e.
Tina adapters allow to use other products in a DYNlink loop, and a wide range of connection accessories simplifies the cabling.



Eden DYN

Eden OSSD
Eden OSSD consists of an Adam OSSD and an Eva (general or unique code).
Adam OSSD can be used with all safety relays and safety PLCs compatible with OSSD signals (commonly used for light guards). Up to 30 Adam OSSD can be connected in series, and since OSSD devices monitor their own outputs for short circuits, a Cat. 4/PL e can still be reached.



Eden OSSD

Ordering information

Eden

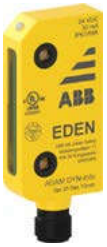

2TLC010045V0201

Adam DYN-Info M12-5

Adam

Type of safety controller	StatusBus	Info signal	Local reset	Series connection	Connector male	Type	Order code
Pluto	x	x [1]		x	M12-5	Adam DYN-Status M12-5	2TLA020051R5200
Pluto or Vital		x		x	M12-5	Adam DYN-Info M12-5	2TLA020051R5100
			x	x	M12-5	Adam DYN-Reset M12-5	2TLA020051R5300
OSSD compatible (incl. Pluto and Sentry)		x			M12-5	Adam OSSD-Info M12-5	2TLA020051R5400
		x		x	M12-8	Adam OSSD-Info M12-8	2TLA020051R5700
			x		M12-5	Adam OSSD-Reset M12-5	2TLA020051R5600
		x	x	x	M12-8	Adam OSSD-Reset M12-8	2TLA020051R5900

1) Pin 5 can be used as a standard info signal or StatusBus.



2TLC010061V0201

Eva General code

Eva

Code description	Code level	Type	Order code
General code. (Eva is interchangeable)	Low level	Eva General code	2TLA020046R0800
Unique code. (Prevents defeat/fraud)	High level	Eva Unique code	2TLA020046R0900


2TLC010049F0201

JSM D20 Eden slide lock

Accessories

Description	Type	Order code
Mounting plate for conventional door/hatch and folding door. Two pieces are needed for a complete set.	JSM D4H	2TLA040033R3600
Mounting plate for folding doors. Used together with one piece of JSM D4H.	JSM D4J	2TLA042020R4000
Sliding lock for Eden on conventional doors. (Eden is not included.)	JSM D20	2TLA020302R1000
Mounting converting plate from Eden E to Eden OSSD or Eden DYN	DA 3A	2TLA020053R0600
Heat shrinking tubes for M12 connectors. Protects M12 connectors in harsh environments and provides extra protection against tampering.	M12 Safety seal	2TLA020053R0800
Wrench for tightening of M12 connectors according to specified torque: 0.6 Nm.	M12 Torque wrench	2TLA020053R0900
Handheld terminal for addressing, configuration and testing of StatusBus devices, DYN-link devices and conventional PNP devices.	FIXA	2TLA020072R2000


2TLC010040F0201

FIXA

Spare parts (included with main product on delivery)

Description	Type	Order code
Distance plate in yellow PBT (4 pcs).	DA 1B	2TLA020053R0700
Black distance rings to be mounted in Adam and Eva mounting holes (4 pcs).	DA 2B	2TLA020053R0300


2TLC172727F0201

Distance plate

Reset buttons for local reset

Description	Type	Order code
Reset button for Adam with 5 pins	Smile 12RF	2TLA030053R2600
Reset button for Adam with 8 pins	Smile 12RG	2TLA030053R2700



2TLC172575F0201

Smile 12RG Reset button

Cables and connectors

Eden



M12-C61



M12-C61HE



M12-C334

Cable with connectors

Connector	Female/male	Length	Special feature	Type	Order code
M12-5	Female	3 m		M12-C31	2TLA020056R0500
		6 m		M12-C61	2TLA020056R0000
			Harsh environment, halogen free	M12-C61HE	2TLA020056R8000
		10 m		M12-C101	2TLA020056R1000
			Harsh environment, halogen free	M12-C101HE	2TLA020056R8100
		20 m		M12-C201	2TLA020056R1400
	Female + male	0.3 m		M12-C0312	2TLA020056R5800
		0.06 m		M12-C00612	2TLA020056R6300
		1 m		M12-C112	2TLA020056R2000
		3 m		M12-C312	2TLA020056R2100
		6 m		M12-C612	2TLA020056R2200
		10 m		M12-C1012	2TLA020056R2300
			Angled female connector	M12-C1012V2	2TLA020056R6700
		16 m		M12-C1612	2TLA020056R5400
		20 m		M12-C2012	2TLA020056R2400
	Male	6 m		M12-C62	2TLA020056R0200
		10 m		M12-C102	2TLA020056R1200
M12-8	Female	3 m		M12-C33	2TLA020056R2900
		6 m		M12-C63	2TLA020056R3000
		10 m		M12-C103	2TLA020056R4000
		20 m		M12-C203	2TLA020056R4100
	Female + male	0.06 m		M12-C00634	2TLA020056R6400
		1 m		M12-C134	2TLA020056R5000
		3 m		M12-C334	2TLA020056R5100



M12-C01



C5 cable

Separate cables and connectors

Description	Type	Order code
Connectors		
M12-5 pole female, straight	M12-C01	2TLA020055R1000
M12-5 pole male, straight	M12-C02	2TLA020055R1100
M12-8 pole female, straight	M12-C03	2TLA020055R1600
M12-8 pole male, straight	M12-C04	2TLA020055R1700
Cable with 5 conductors		
10 m cable with 5 x 0.34 shielded conductors	C5 cable 10 m	2TLA020057R0001
50 m cable with 5 x 0.34 shielded conductors	C5 cable 50 m	2TLA020057R0005
100 m cable with 5 x 0.34 shielded conductors	C5 cable 100 m	2TLA020057R0010
200 m cable with 5 x 0.34 shielded conductors	C5 cable 200 m	2TLA020057R0020
500 m cable with 5 x 0.34 shielded conductors	C5 cable 500 m	2TLA020057R0050
Cable with 8 conductors		
50 m cable with 8 x 0.34 shielded conductors	C8 cable 50 m	2TLA020057R1005
100 m cable with 8 x 0.34 shielded conductors	C8 cable 100 m	2TLA020057R1010
200 m cable with 8 x 0.34 shielded conductors	C8 cable 200 m	2TLA020057R1020
500 m cable with 8 x 0.34 shielded conductors	C8 cable 500 m	2TLA020057R1050

Connection Accessories

Eden



2TLC010008F0201

JSOP-2 Terminator

Connection accessories

Description	Type	Order code
Y-connector for series connection of DYNlink devices with M12-5 connectors, e.g. Eden.	M12-3A	2TLA020055R0000
Y-connector for series connection of DYNlink devices with the StatusBus function.	M12-3S	2TLA020055R0600
Y-connector for series connection of Adam OSSD M12-8 with M12-8 cables	M12-3G	2TLA020055R0700
Y-connector for series connection of Adam OSSD M12-8 with M12-5 cables	M12-3H	2TLA020055R0800
Termination plug M12-5. For Adam OSSD with M12-3H. Connects pin 1 with pin 2 and 4.	JSOP-1 Terminator	2TLA020053R7000
Termination plug M12-8. For Adam OSSD with M12-3G. Connects pin 2 with pin 3 and 4.	JSOP-2 Terminator	2TLA020053R7100

Technical data
Eden

Technical data

	Eden DYN, Eden OSSD
Approvals	
Conformity	CE 2006/42/EC - Machinery 2014/30/EU - EMC 2011/65/EU - RoHS
	EN ISO 12100:2010, EN ISO 13849-1:2015, EN 62061:2005/A2:2015, EN 60204-1:2006+A1:2009, EN 60664-1:2007, EN 61000-6-2:2005, EN 61000-6-4:2007, EN 60947-5-3:2013, EN ISO 14119:2013, EN 61508:2010
Functional safety data	
EN/IEC 61508:2010	SIL3, PFH_D = 4.5 x 10^{-9}
EN/IEC 62061:2005+A1:2013	SILCL3, PFH_D = 4.5 x 10^{-9}
EN ISO 13849-1:2008	PL e, Cat. 4, PFH_D = 4.5 x 10^{-9}
Electrical data	+24 VDC Tolerance: +14.4...+27.6 VDC
Mechanical data	
Operating temperature	-40 °C...+70 °C (storage/operation)
Protection class	IP67 and IP69K
Humidity range	35 to 85% (no icing, no condensation)
Material	
Housing	Polybutylene terephthalate (PBT)
Moulding	Epoxy
Weight	Eva: 70 g, Adam: 80 g
Assured release distance (S_{ar})	25 mm
Assured operating distance (S_{ao})	10 mm
Rated operating distance (S_n)	15 ± 2mm
Recommended distance between Adam and Eva	7 mm
Min distance between two Eden	100 mm

More information
For more information, e.g. the complete technical information, see product manual for:
Eden DYN 2TLC172271M0201
Eden OSSD 2TLC172272M0201

Connection diagrams
For Eden connection diagrams please see https://library.abb.com/

Dimension drawings

Eden

Dimension drawings

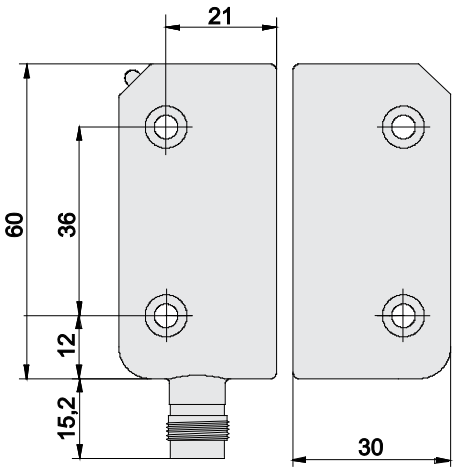

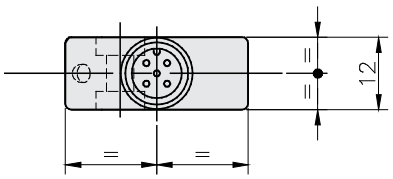

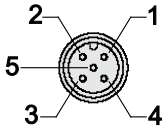

Adam M12-5 male connector.
(Note that some models have 8 pins instead.)

All dimensions in mm

Safety magnetic switch
Sense7

Sense7 is a coded magnetic non-contact switch for interlocking gates and hatches.

Sense7 has a stainless steel housing that is designed for harsh environments and extreme temperatures.

Sense7 offers and interlocking function reaching PL e/SIL3 with low level coding.



Safety and protection

High safety level
Sense7 has two closing and one opening solid state contacts. Two of these needs to be monitored to achieve PL e/SIL3.

LED indication
An integrated LED shows the status of the sensor.

Easy to install

Compact size
Sense7 is compact in size to make it easy to position and hide on gates and hatches.

Large sensing distance
With a large sensing distance and a high tolerance for misalignment Sense7 is easy to install.

Reliable in extreme conditions

Stainless steel
With a stainless steel 316 body and a IP67/IP69K rating, Sense7 is resistant to harsh environments with both dirt and water.

Hygienic design
Sense7 has no dust collecting cavities, and the stainless steel has a mirror polished finish (Ra4) suitable for CIP cleaning - food splash zones acording to EHEDG guidelines.

High temperatures
Sense7 can be used at temperatures from -25 °C up to 105 °C.

Ordering details
Sense7



Sense7Z 2M

Ordering details

Sense7 is always delivered with both switch and actuator.

Description	Connector	Cable length (m)	Contacts	Type	Order code
Safety magnetic switch	M12-8 male	0,25	2NC+1NO	Sense7Z M12	2TLA050056R2120
Safety magnetic switch	-	2	2NC+1NO	Sense7Z 2M	2TLA050056R4120
Safety magnetic switch	-	5	2NC+1NO	Sense7Z 5M	2TLA050056R5120
Safety magnetic switch	-	10	2NC+1NO	Sense7Z 10M	2TLA050056R6120



Sense7Z Key SS

Spare part

Type of handle	Type	Order code
Actuator to safety magnetic switch Sense7Z, stainless steel.	Sense7Z Key SS	2TLA050040R0212

Technical data
Sense7

Technical data

Approvals	cULus TÜV
Conformity	CE 2006/42/EC 2014/30/EU 2011/65/EU EN ISO 12100:2010, EN ISO 14119:2013, EN ISO 13849-1:2008+AC:2009, EN 60947-5-3:1999+A1:2005, EN 60947-5-2:1998+A1:1999+A2:2004
Functional safety data	
EN/IEC 61508:2010	Up to SIL3 (depending on system architecture) $PFH_D = 2.52 \times 10^{-8}$
EN/IEC 62061:2005+A1:2013	Up to SILCL3 (depending on system architecture) $PFH_D = 2.52 \times 10^{-8}$ Proof test interval $T_1 = 47$ a $MTTF_d = 470$ a (8 cycles per hour/24 hours per day/365 days) $B_{10d} = 3\,300\,000$ operations at 100 mA load
EN ISO 13849-1:2008	Up to PL e, Cat 4 (depending on system architecture) $PFH_D = 2.52 \times 10^{-8}$
If the product usage differs from these assumptions (different load, operating frequency, etc.) the values must be adjusted accordingly.	
Electrical data	
Operating voltage	+24 VDC ± 10%
Minimum switched current	10 VDC 1 mA
Safety channel output (NC/NO)	24 VDC 0.2 A max. rating
Mechanical data	
Material	Stainless steel 316
Protection class	IP67 and IP69K
Operating temperature	-25 °C ... + 105 °C
Cable type	PVC 8 core 6 mm
Mounting bolts (tightening torque)	2 x M4 (1.0 Nm)
Assured release distance (S_{ar})	10 mm
Assured operating distance (S_{or})	20 mm
Recommended distance	5 mm

More information

For more information, e.g. the complete technical information,see product manual:
Sense 2TLC172249M0201

Dimension drawings

Sense7

Dimensions - Sense7Z

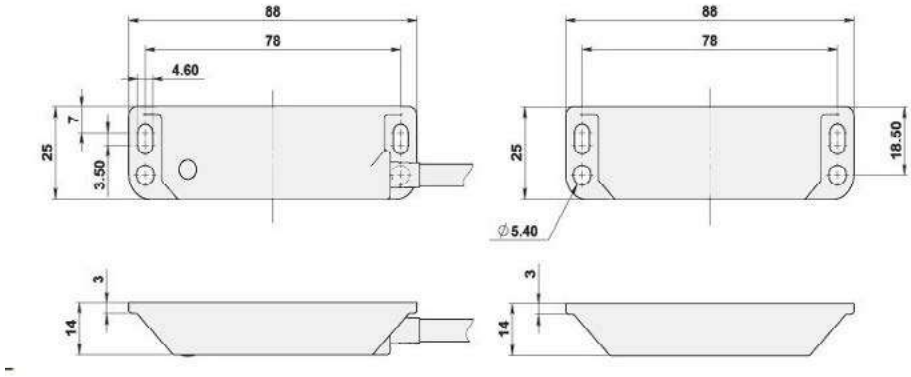

All dimensions in mm

Safety interlock switch
MKey

MKey are mechanical safety switches used for monitoring doors and hatches. The switch is mounted on the frame and the actuator key on the moving part of the guard.

All MKey models have a safe interlocking function. Some MKey models can be locked and depending on the locking signal they can be used either as process locks or safety locks (with a safe unlocking function).

MKey switches are available in different material and sizes in order to meet the requirements of different applications.



Safety and protection

Highest level of safety
PL e/SIL3 can be reached when using two switches on a door.

Safety lock
Models that use power to unlock can be used as safety locks.

Emergency escape button
Using MKey8ER with an integrated emergency escape button, it is always possible to open the door from inside the dangerous zone.

Continous operation

Strong holding force
A holding force of up to 2000 N prevents unwanted process stops.

Robust design
Models are available with full stainless steel housing with IP69K, suitable for most applications in food processing and chemical industries.

Status information
Auxiliary contacts give status information.

Easy to install

Easy mounting with rotating head
The head of the switch can be mounted in up to 8 actuating positions to allow different mounting positions.

Flexible keys
Flexible keys are available to minimize mechanical wear and allow a smaller movement radius and use in reduced spaces.

Applications
MKey

Doors and hatches
MKey is used to monitor the position of doors and hatches. The models with locking function are usually used for:
– Processes which should not be interrupted, such as welding.
– Machinery with a long stopping procedure, such as paper machinery that requires a long braking operation.
– Prevention of unauthorized access to a particular area.

Please note that all safety key switches (including MKey) normally need two switches per door/hatch in order to reach PL e/SIL3. (See EN ISO 13849 and EN ISO 14119.)

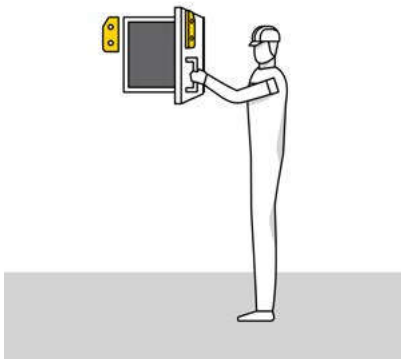

Locking and interlocking
An interlocking function indicates if a door is open or closed and prevents movement when the door is open, but it does not prevent the door from being opened. A locking function makes sure the door is kept closed.

Process lock with safe interlocking
All MKey models offer a safe interlocking function that will stop the process if the door/hatch is opened. All lockable models of MKey can also be used as a process lock to prevent the process from being interrupted.
An example of an application where a process lock could be used is a welding robot where the stopping time is short, but the welding should not be interrupted once it has started.

Safety lock with safe interlocking and safe unlocking
The MKey models that uses power to unlock can be used as safety locks. They have a safe unlocking function, which means that the loss of power for these locks will not result in the release of the locking element, and the door will remain locked even during a power failure.
An example of an application where a safety lock should be used is a circular saw that would have a long stopping time after a power failure.

Features
MKey

Different models
MKey5 are simple mechanical interlocks while MKey8 and MKey9 also have locking functions.
– MKey5: plastic body with plastic or stainless steel head, or full stainless steel body and head.Holding force 12 N or 40 N.
– MKey8: robust design in die cast metal or stainless steel body and head. Holding force of 2000 N.
– MKey9: plastic body with stainless steel head. Holding force of 1800 N.

Different materials and protection classes
The housing and head of the key switches are available in different material in order to meet the requirements of different applications. Metal heads are more resistant to mechanical wear. The choice between plastic, die cast or stainless steel depends on the environment and the chemicals used. Models ending with -Z are completely made of stainless steel 316 and offers an IP69K protection class. They can be high pressure hosed with detergent at high temperature and can be used in harsh applications, e.g. the food processing and chemical industries. All other models offer IP67.

Emergency escape button
MKey8ER has a manual release button at the rear of the housing. It is used for emergency exit by a person locked inside the dangerous zone by mistake. It is a non-latching manual escape, and can be used when the risk assessment requires it. The switch must be mounted so that the release button is reachable from inside the dangerous zone, but not reachable from outside. Pressing and holding the button will release the locking mechanism allowing to open the door/guard.



Power to lock or power to unlock
Two different types of locking function are available:
– Spring lock (power to unlock) models are automatically locked when closing the door. An active signal (+24 VDC) must be supplied to unlock the switch, which makes these models suitable as safe locks.
– Electro-magnetic lock (power to lock) models are locked when an active signal (+24 VDC) is supplied, which makes these models suitable only as process locks.

Rotatable head
Depending on model, the head of MKey can be set in two or four directions with two entrance holes each, thus providing four or eight different mounting positions. The leading edges of the actuator key are reinforced and beveled in order to guide it properly into the hole.



Constructed for safety
All MKey switches have double positively operated forced-guided contacts controlled by the actuator key. This means that the contacts that are closed when the actuator key is in the switch will be forced to open, and the ones that are opened will be forced to close, when the actuator key is removed. It also means that it is not possible to have, e.g. NO and NC contacts opened at the same time due to a fault like one welded contact.
The actuator key is designed to prevent tampering with the safety switch using a tool, a magnet or any similar object.
The lockable models also have forced-guided contacts controlled by the locking mechanism.
MKey8 and MKey9 have auxiliary contacts giving status information (not MKey5, MKey8M or MKey9M).

Ordering information

MKey



MKey5



MKey5 SSH



MKey5Z



MKey9



MKey8ER



MKey8Z

MKey ordering information

Locking function	Material housing	Material head	Holding force	Special feature	Type	Order code
—	Plastic	Plastic	12 N		MKey5	2TLA050003R0100
			40 N		MKey5+	2TLA050003R0101
		Stainless steel	12 N		MKey5 SSH	2TLA050003R0110
			40 N		MKey5+ SSH	2TLA050003R0111
	Stainless steel	Stainless steel	12 N	IP69K	MKey5Z	2TLA050003R0120
			40 N	IP69K	MKey5+Z	2TLA050003R0121
Process lock (power to lock)	Plastic	Stainless steel	1800 N		MKey9M 24VDC	2TLA050009R0112
	Die cast	Die cast	2000 N		MKey8M 24VDC	2TLA050013R0132
Safety lock (power to unlock)	Plastic	Stainless steel	1800 N		MKey9 24VDC	2TLA050007R0112
				No key supplied	MKey9 24VDC, No Key	2TLA050007R0012
	Die cast	Die cast	2000 N		MKey8 24VDC	2TLA050011R0132
				With escape release button	MKey8ER 24VDC	2TLA050015R0132
	Stainless steel	Stainless steel	2000 N	IP69K	MKey8Z 24VDC	2TLA050011R0122

Accessories

MKey



MKey Key 2



MKey Key 3



MKey Key 4



MKey Key 6



MKey slide lock left



MKey slide lock right

Actuator keys

All MKey safety switches are supplied with the appropriate standard key, except MKey9 24VDC, No key. Choose standard key or flat key depending on suitable mounting direction, e.g. standard door or sliding door. Flexible keys are suitable for doors/hatches with a smaller opening radius (i.e. 100-175 mm).

Type of key	Compatible MKey models	Key housing	Description	Type	Order code
Standard key	MKey5 MKey5+	None	Standard key for MKey safety switches with plastic head. Stainless steel key.	MKey Key 1	2TLA050040R0201
	MKey5 SSH MKey5+ SSH MKey5Z MKey5+Z All MKey8 All MKey9	None	Standard key for MKey safety switches with metal head. Stainless steel key.	MKey Key 2	2TLA050040R0202
Flat key	All	Plastic shroud	Flat key for MKey safety switches. Stainless steel key with plastic shroud.	MKey Key 3	2TLA050040R0220
Flexible key	All MKey5	Plastic	Flexible key for MKey5 safety switches. Stainless steel key with plastic housing.	MKey Key 4	2TLA050040R0221
	All	Die cast	Flexible key for MKey safety switches. Stainless steel key with black die cast metal housing.	MKey Key 5	2TLA050040R0203
	All	Stainless steel	Flexible key for MKey safety switches. Stainless steel key with stainless steel housing.	MKey Key 6	2TLA050040R0204

Other accessories

Description	Type	Order code
Bit for manual unlocking of MKey8Z. Stainless steel.	MKey8Z Manual release	2TLA050040R0400
Maintenance lockout actuator key. Compatible with all MKey switches.	MKey Lockout key	2TLA050040R0401
Slide Lock for MKey8 and MKey9, left.	MKey slide lock left	2TLA050040R0500
Slide Lock for MKey8 and MKey9, right.	MKey slide lock right	2TLA050040R0501
Fitting in stainless steel for mounting MKey5 on a Quick-Guard conventional door.	JSM D29A	2TLA040033R6000
Fitting in stainless steel for mounting MKey5 on a Guick-Guard sliding door.	JSM D29B	2TLA040033R6100
Fitting in stainless steel for mounting Mkey8 and Mkey9 on a Quick-Guard conventional door.	JSM D29C	2TLA040033R6200
Fitting in stainless steel for mounting Mkey8 and MKey9 on a Quick-Guard sliding door.	JSM D29D	2TLA040033R6300
Spacer in stainless steel for flexible keys. Required when using JSM D29A and JSM D29C.	JSM D29E	2TLA040033R6400
Rear handle for sliding doors.	RHS GKey MKey	2TLA050040R0510
Spring loaded catch for sliding doors.	SCS GKey MKey	2TLA050040R0511

Technical data

MKey

Technical data

	MKey5	MKey8	MKey9
Approvals			
Conformity	CE 2006/42/EC - Machinery 2014/30/EU - EMC 2011/65/EU - RoHS EN ISO 12100:2010, EN ISO 14119:2013, EN 60204-1:2006:+A1:2009, EN 60947-1:2007:+A1:2011, EN 60947-5-1:2004:+A1:2009		
Functional safety data			
B_{10d}	2,500,000 operations at 100 mA load		
EN/IEC 62061	Up to SILCL3 (depending on system architecture) [1]		
EN ISO 13849-1	Up to PL e (depending on system architecture) [1]		
Electrical data			
Contact block configuration with guard open and unlocked			
For actuator key	2 NO + 1 NC	MKey8, Mkey8Z, MKey8ER: 2 NO + 1 NC MKey8M: 1 NO + 1 NC	MKey9: 2 NO + 1 NC [2] 1 NO + 1 NC
For solenoid/locking	-	MKey8, Mkey8Z, MKey8ER: 2NO + 1NC MKey8M: 2 NO	MKey9: 2 NO + 1 NC [2] MKey9M: 2 NO
Solenoid voltage	-	+24 VDC ± 10%	+24 VDC ± 10%
DC-13	+24 VDC / 3 A		
AC-15	230 VAC / 3 A		
Mechanical data			
Travel for positive opening	6 mm	10 mm	10 mm
Actuator key entry minimum radius	175 mm Standard Key, 100 mm Flexible Key		
Material	Body: Polyester or stainless steel 316 Head: Polyester or stainless steel 316	MKey8, MKey8M, MKey8ER: Die cast painted red MKey8Z: Stainless steel 316	Body: Glass filled polyester Head: Stainless steel 316
Conduit entries	3 x M20 x 1.5	3 x M20 x 1.5	1 x M20 x 1.5
Operating temperature	-25...+80 °C	-25...+40 °C	-25...+40 °C
Protection class	MKey5, MKey5+, MKey5 SSH, MKey5+ SSH: IP67 MKey5Z, MKey5+Z: IP67, IP69K	MKey8, MKey8M, MKey8ER: IP67 MKey8Z: IP67, IP69K	IP67

1) Please see EN/IEC 62061, EN ISO 13849, EN ISO 14119 and ISO/TR 24119 to see how fault exclusions and serial connection impacts the reliability of the safety related parts of control systems.
2) For MKey9, the pair of contacts for the actuator key and the pair of contacts for the locking cannot be used independently of each other. See the manual for more information.

More information

For more information, e.g. the complete technical information, see product manual:
MKey5 2TLC172244M0201
MKey8 2TLC172245M0201
MKey9 2TLC172246M0201

Connection diagrams

For MKey connection diagrams please see https://library.abb.com/

Dimension drawings

MKey

MKey5

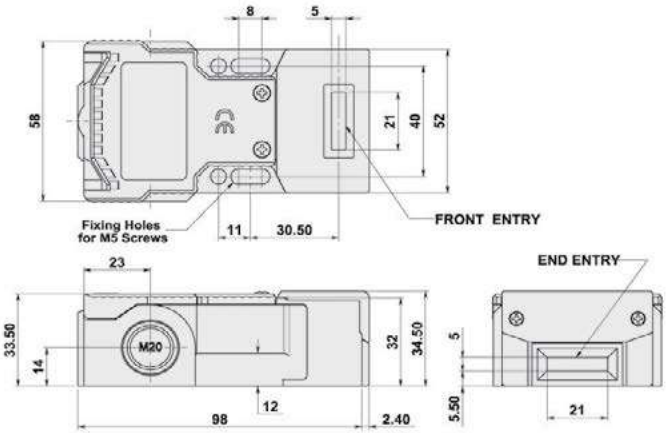

MKey5Z

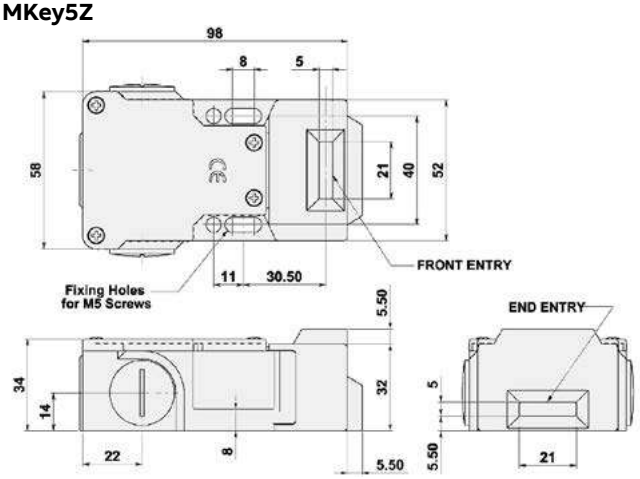

MKey8 and MKey8M

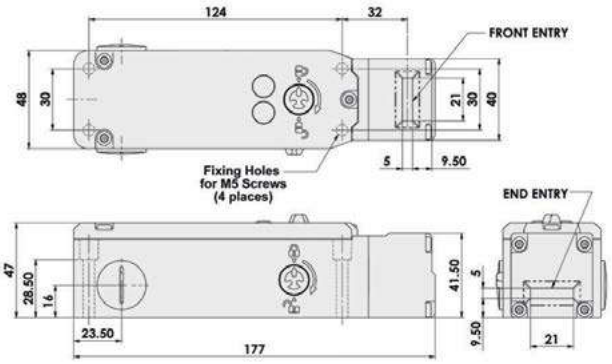

MKey8ER

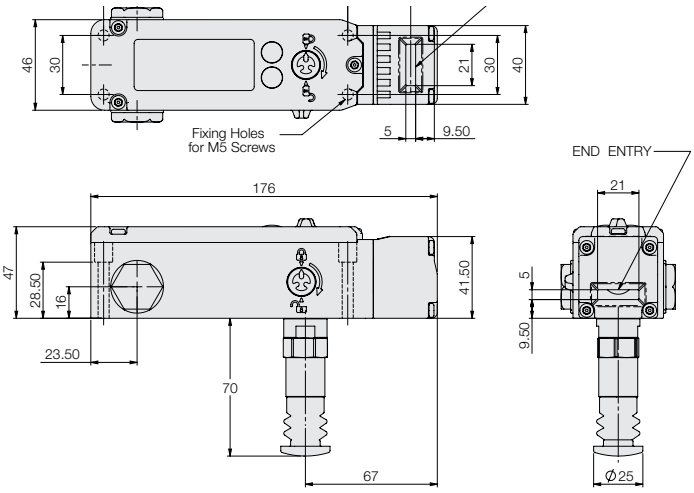

MKey9 and MKey9M

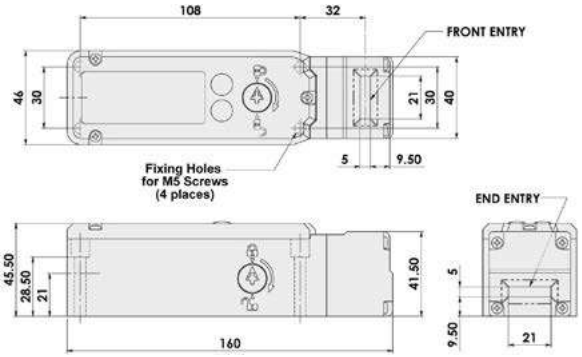

All dimensions in mm

Electromagnetic process lock
Magne

Magne is an electromagnetic process lock intended for locking doors and hatches.

Magne is usually used to prevent unwanted process interruptions, e.g. during a welding operation.

Magne models with integrated Adam safety sensor make it easy to achieve the highest safety level for the interlocking function.



Reliable in extreme conditions

Sealed aluminium housing
IP67 sealing gives Magne good protection.

Robust design
The electromagnetic lock without mechanical moving parts is a robust design with fewer parts that are subject to wear.

Easy to install

M12 connectors
Quick and easy cabling with M12 connectors.

Magnets simplify installation
Electromagnets offer larger mounting tolerances than mechanical locks.

Continuous operation

LED diagnostics
Integrated LED diagnostics that are easy to see reduce down time when troubleshooting.

Strong holding force
A holding force of up to 1500 N prevents unwanted process stops.

Applications and features

Magne

Applications

Protect the process
Magne 4 associated with an Eva actuator is a process lock with a safe interlocking function. This means that the interlocking function reaches PL e/SIL3 but the unlocking signal is not a safe signal.

Magne 3 is a simple lock without any interlocking function/ safety function.

A typical application for Magne 4 is to prevent unintentional/unnecessary interruptions of a sensitive process when the dangerous movement has a very short stop time.



Features

PL e in a simple and cost effective way
Magne 4 has an integrated Adam sensor wich provides the interlocking function when it is associated with an Eva actuator: when the door is opened, a safety signal is sent to the safety control unit.
Magne 4 makes it easy to reach PL e/SIL3 for the interlocking function.
The Eva actuator is ordered and installed separately. Eva is available with a general or a unique code.
Magne 4 is available with integrated Adam DYN (DYNlink signal) or Adam OSSD (OSSD signal). Both enable serial connection of several Magne 4 locks using only one input for Magne DYN and two for Magne OSSD.



Optional permanent magnet
Anchor plates for Magne are ordered separately and are available with or without permanent magnet. A permanent magnet holds the door closed when Magne is unlocked, or if there is a power loss. Without the permanent magnet, Magne has no magnetic field when unlocked, which avoids the accumulation of metallic particles on the magnet.

M12 connectors
With Magne 4, only one cable is necessary for both the locking and the interlocking.
The M12 connectors speed up connection and reduce the risk of connection errors.
Several Y-connectors and connection accessories are available to facilitate connection in series.



Status indication
Most models offer an info signal indicating whether Magne is locked or not, which simplifies troubleshooting and improves user friendliness. This signal should not be used for safety.

Locking and interlocking
An interlocking function indicates if a door is open or closed and prevents movement when the door is open. But it does not prevent the door from being opened. A locking function makes sure the door is kept closed.

Ordering information

Magne



Magne 3



Magne 4



JSM D28

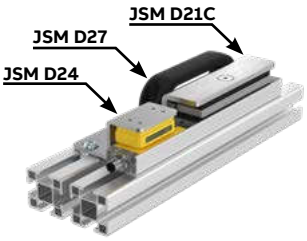



JSM D23C



Tina 12A



Magne rubber 1B



Magne Anchor 32E

Ordering details

For a complete Magne lock both door part and frame parts are necessary. Magne 4 also requires a separate Eva sensor.

Safe interlocking with integrated Adam	Safety signal	Extra function	Connector	Type	Order code
No	-	-	M12-5 male	Magne 3X M12-5	2TLA042022R2700
Yes	DYNlink	-	M12-5 male	Magne 4X DYN M12-5	2TLA042022R3000
		One combined "locked and closed" information output	M12-8 male	Magne 4 DYN-Info	2TLA042022R3400
		Two separate “locked” and “closed” information outputs	M12-8 male	Magne 4 DYN-2Info	2TLA042022R3410
	OSSD	One combined "locked and closed" information output	M12-8 male	Magne 4 OSSD-Info	2TLA042022R4600

Accessories

Description	Type	Order code
Aluminium profile for door handle that completely covers a Magne unit when the door is closed. For conventional door (5–15 mm door gap)	JSM D28	2TLA042023R0100
Mounting kit for Magne. For conventional door (5 -15 mm door gap) *	JSM D21C	2TLA042023R0510
Mounting kit for Magne. For sliding door *	JSM D23C	2TLA042023R0210
Mounting kit for Eva. For conventional door*	JSM D24	2TLA042023R0300
Door handle for JSM D21C	JSM D27	2TLA042023R1000
Connection block for serial connection of two Magne (M12-8)	Tina 12A	2TLA020054R1800
Cellular rubber, 10 mm thick. Spare part for Magne Anchor plate.	Magne rubber 1B	2TLA042023R3610

* All mounting kits include the bolts and nuts necessary to mount Magne on ABB Quick-Guard® fencing system

Door part

Description	Type	Order code
Anchor plate with permanent magnet. Delivered with Magne rubber.	Magne Anchor 32E	2TLA042023R0420
Anchor plate without permanent magnet. Delivered with Magne rubber.	Magne Anchor 32D	2TLA042023R0410

Eva sensor for Magne 4 models

Compatible Adam	Code description	Code level	Type	Order code
Adam DYN and OSSD	General code. (Eva is interchangeable)	Low level	Eva General code	2TLA020046R0800
	Unique code. (Prevents defeat/fraud)	High level	Eva Unique code	2TLA020046R0900

Cables and connectors

Magne



M12-C61



M12-C61HE



M12-C334

Cable with connectors

Connector	Female/male	Length	Special feature	Type	Order code
M12-5	Female	3 m		M12-C31	2TLA020056R0500
		6 m		M12-C61	2TLA020056R0000
			Harsh environment, halogen free	M12-C61HE	2TLA020056R8000
		10 m		M12-C101	2TLA020056R1000
			Harsh environment, halogen free	M12-C101HE	2TLA020056R8100
		20 m		M12-C201	2TLA020056R1400
	Female + male	0.3 m		M12-C0312	2TLA020056R5800
		0.06 m		M12-C00612	2TLA020056R6300
		1 m		M12-C112	2TLA020056R2000
		3 m		M12-C312	2TLA020056R2100
		6 m		M12-C612	2TLA020056R2200
		10 m		M12-C1012	2TLA020056R2300
			Angled female connector	M12-C1012V2	2TLA020056R6700
		16 m		M12-C1612	2TLA020056R5400
		20 m		M12-C2012	2TLA020056R2400
	Male	6 m		M12-C62	2TLA020056R0200
		10 m		M12-C102	2TLA020056R1200
M12-8	Female	3 m		M12-C33	2TLA020056R2900
		6 m		M12-C63	2TLA020056R3000
		10 m		M12-C103	2TLA020056R4000
		20 m		M12-C203	2TLA020056R4100
	Female + male	0.06 m		M12-C00634	2TLA020056R6400
		1 m		M12-C134	2TLA020056R5000
		3 m		M12-C334	2TLA020056R5100



M12-C01



C5 cable

Separate cables and connectors

Description	Type	Order code
Connectors		
M12-5 pole female, straight	M12-C01	2TLA020055R1000
M12-5 pole male, straight	M12-C02	2TLA020055R1100
M12-8 pole female, straight	M12-C03	2TLA020055R1600
M12-8 pole male, straight	M12-C04	2TLA020055R1700
Cable with 5 conductors		
10 m cable with 5 x 0.34 shielded conductors	C5 cable 10 m	2TLA020057R0001
50 m cable with 5 x 0.34 shielded conductors	C5 cable 50 m	2TLA020057R0005
100 m cable with 5 x 0.34 shielded conductors	C5 cable 100 m	2TLA020057R0010
200 m cable with 5 x 0.34 shielded conductors	C5 cable 200 m	2TLA020057R0020
500 m cable with 5 x 0.34 shielded conductors	C5 cable 500 m	2TLA020057R0050
Cable with 8 conductors		
50 m cable with 8 x 0.34 shielded conductors	C8 cable 50 m	2TLA020057R1005
100 m cable with 8 x 0.34 shielded conductors	C8 cable 100 m	2TLA020057R1010
200 m cable with 8 x 0.34 shielded conductors	C8 cable 200 m	2TLA020057R1020
500 m cable with 8 x 0.34 shielded conductors	C8 cable 500 m	2TLA020057R1050

Technical data
Magne

Technical data

	Magne 3	Magne 4
Approvals		
Conformity	CE 2006/42/EC - Machinery 2014/30/EU - EMC 2011/65/EU - RoHS 2015/863 - RoHS3 EN 60204-1:2006+A1:2009, EN 60664-1:2007, EN 60947-5-2:2007+A1:2012, EN 60947-5-3:2013	CE 2006/42/EC - Machinery 2014/30/EU - EMC 2011/65/EU - RoHS 2015/863 - RoHS3 EN ISO 12100:2010, EN ISO 13849-1:2015, EN ISO 13849-2:2012, EN 62061:2005+A1:2012+A2:2015, EN 61508:2010, EN 60204-1:2006+A1:2009, EN 60664-1:2007, EN 60947-5-2:2007+A1:2012, EN 60947-5-3:2013
Functional safety data		
EN 61508:2010		Interlocking function: SIL3, $PFH_D = 4.50 \times 10^{-9}$
EN 62061:2005		Interlocking function: SILCL3, $PFH_D = 4.50 \times 10^{-9}$
EN ISO 13849-1:2015		Interlocking function: PL e, Cat. 4, $PFH_D = 4.50 \times 10^{-9}$
Electrical data		
Operating voltage	+24 VDC ± 15%	
Holding force		
+24 VDC	Up to 1500 N	
0 V, Anchor plate 32D	0 N	
0 V, Anchor plate 32E	30 N	
Assured release distance (S_{ar})		25 mm
Assured operating distance (S_{ao})		10 mm
Mechanical data		
Operating temperature	-20...+50 °C	
Humidity range	35 to 85% (with no icing or condensation)	
Protection class	IP67	
Weight		
	700 g	700 g
Anchor plate 32D/E	290 g	
Material		
Anchor plate	Iron with nickel coating	
Electromagnet	Iron with zinc coating	
Housing	Anodized aluminum with parts in polycarbonate	
Potting	PUR, epoxy	

More information
For more information, e.g. the complete technical information, see product manual for:
Magne 2TLC172315M0201

Dimension drawings

Magne

Magne

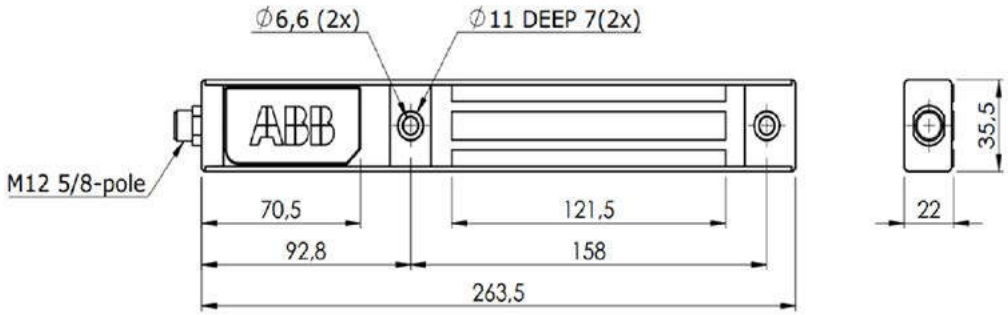

Anchor plate 32D

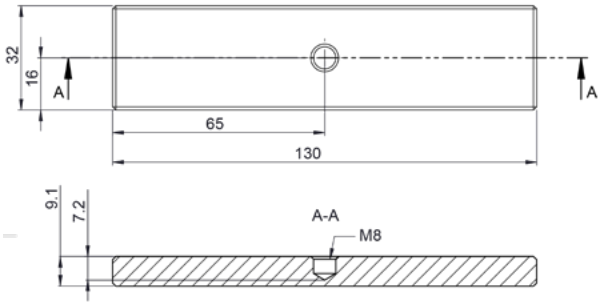

Anchor plate 32E

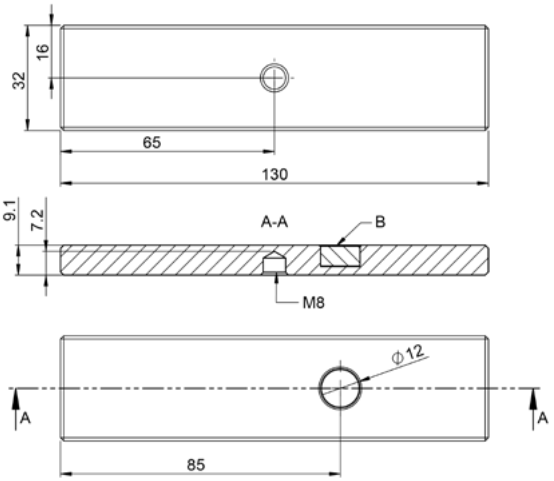

All dimensions in mm

Safety lock
GKey

GKey is a robust safety lock with a die cast housing for hinged and sliding doors.

GKey offers an interlocking function reaching PL e/SIL 3 with high level coding. Power is needed to unlock GKey which makes GKey a safety lock.

GKey is fitted with a rear escape release button and manual unlocking (auxiliary release).

GKey offers four positions for 22 mm pilot devices.



Safety and protection

Escape release
The door can always be opened from inside the danger zone using the escape release button.

High level coding
A standard mechanical interlock combined with RFID coding offers high level coding.

Lockout function
GKey can be padlocked off for safe working.

Easy to install

Integrated buttons
There are four positions in the key housing that can be used for integrating push buttons, switches or pilot lights.

Reliable in extreme conditions

Robust design
Made of die cast aluminum alloy with a robust construction, GKey is ideal for use in mechanically demanding environments.

Ordering details

GKey



GKey4 RU



FHS GKey4



RHS GKey MKey



SCS GKey MKey



CE3P-10R-02



C2SS1-10B-20



CP1-11C-10



MA1-8130



KA1-8120

Ordering Details

For a complete safety lock, a switch and a mounting plate with front handle must be ordered separately. Rear handle, spring catch, pilot devices and blanking plugs for the unused positions are available and also ordered separately.

Switches

All models are fitted with an escape release button and delivered with a high level coded RFID actuator.

Material (body)	Positions for pilot devices	Manual unlock	Type	Order code
Die cast	4	Yes	GKey4 RU	2TLA050304R0002

Mounting plate with front handle

The handle can be mounted on hinged doors and sliding doors, on the left or on the right.
Note that door and frame must be aligned when the door is closed.
Each order code includes a mounting plate for the switch and a front handle.

Type of handle	Material (mounting plates and sliding bolt)	Type	Order code
Sliding	Die cast	FHS GKey4	2TLA050310R0032

Accessories - Rear handle and spring loaded catch

The spring loaded catch prevents from closing the door by mistake. When the sliding handle is in open position, the catch must be pulled in order to be able to push back the handle to closed position.

Type of handle	Material	Description	Type	Order code
Sliding	Die cast	Rear handle	RHS GKey MKey	2TLA050040R0510
		Spring catch	SCS GKey MKey	2TLA050040R0511

Accessories - Pilot devices

Pilot devices and blanking plugs must be ordered separately. Make sure that the total amount is 4, so that all holes in GKey4 are covered.

Description	Contacts	Illuminated	Voltage	Type	Order code
Emergency stop button	2NC	No	24 V AC/DC	CE3P-10R-02	1SFA619501R1051
Selector switch	2NO	No	24 V AC/DC	C2SS1-10B-20	1SFA619200R1026
Push button Green	1NO	Yes	24 V AC/DC	CP1-11G-10	1SFA619100R1112
Push button Yellow	1NO	Yes	24 V AC/DC	CP1-11Y-10	1SFA619100R1113
Push button Blue	1NO	Yes	24 V AC/DC	CP1-11L-10	1SFA619100R1114
Push button White/Clear	1NO	Yes	24 V AC/DC	CP1-11C-10	1SFA619100R1118
Push button Black	1NO	No	24 V AC/DC	CP2-10B-10	1SFA619101R1016
Blanking plug Black				MA1-8130	1SFA611920R8130
Legend plate holder (without insert)				KA1-8120	1SFA616920R8120

More information
For more optional pilot devices, pre-printed legend plate inserts and other accessories, please see the Compact range of ABB pilot devices:
http://new.abb.com/low-voltage/products/pilot-devices

Accessories for cable holes

Description	Type	Order code
Cable gland M20 x 1.5	Gland M20x1.5	2TLA050040R0002
Conduit plug M20 x 1.5	Cond.Plug M20x1.5	2TLA050040R0004

Technical data

GKey

Technical data

Approvals	c UL us
Conformity	CE 2006/42/EC – Machinery 2014/53/EU – RED 2011/65/EU – RoHS2 2015/863 – RoHS3 EN ISO 12100:2010, EN ISO 14119:2013, EN ISO 13849-1:2015, IEC 62061:2005+A2:2015, IEC 60947-5-3:2013, IEC 60947-1:2014, EN 60204-1:2018, EN 301 489-1 V2.1.1, EN 301 489-3 V1.6.1
Functional safety data	
EN 62061:2005+A1:2013	SIL3 PFH = 4.77 x 10^{-10} (corresponds to 4.8% of SIL3), PFD = 4.18 x 10^{-5} (corresponds to 4.2% of SIL3) Proof test interval T_1 = 20 a
EN ISO 13849-1:2008	PL e (if both channels are used in conjunction with a SIL3/PL e control device), Category 4, $MTTF_d$ = 1100 a, DC high
Assumptions	d_{op} = 365d, h_{op} = 24h
If the product usage differs from these assumptions (different load, operating frequency, etc.) the values must be adjusted accordingly.	
Electrical data	
Operating voltage	+24 VDC ± 10%
Holding force	3000 N
Mechanical data	
Connection	M20 (x3)
Operating temperature	-25 °C ... +40 °C
Protection class	IP65.

More information

For more information, e.g. the complete technical information,see product manual:
GKey 2TLC010048M0201

Connection diagrams

For GKey connection diagrams please see https://library.abb.com/

Electrical connection

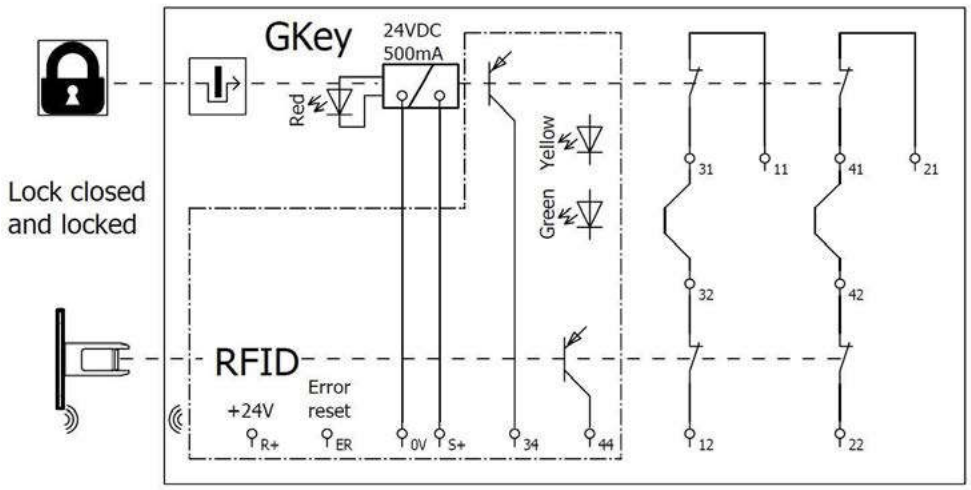

Actuator must be in place and RFID coding verified for the safety contacts to close.

Dimension drawings

GKey

Dimensions - GKey4 switch and actuator

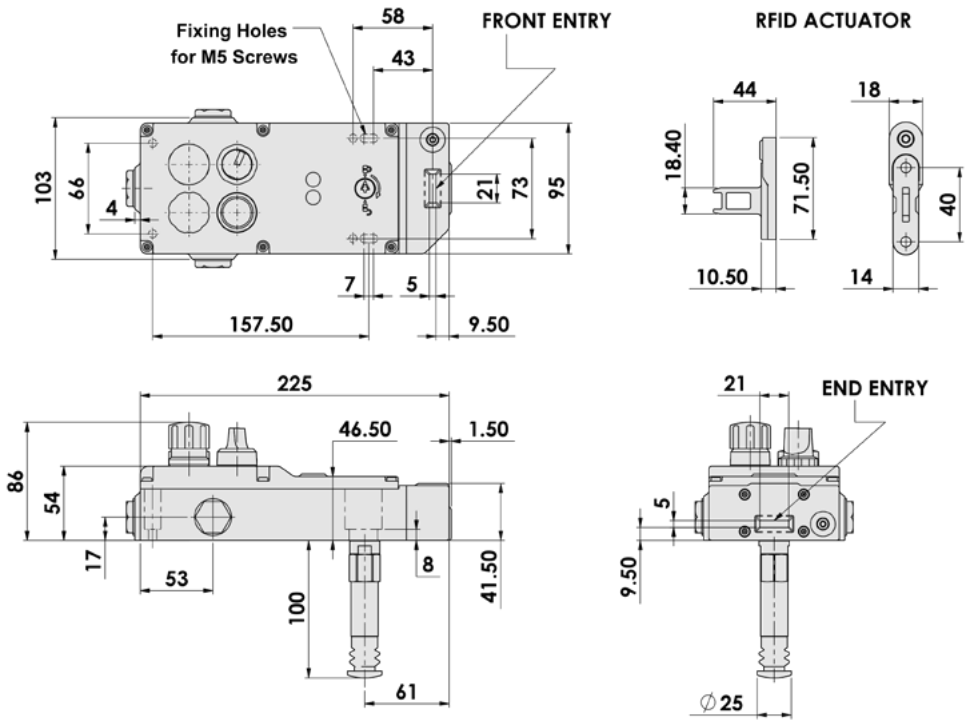

Dimensions - FHS GKey4 with rear handle and spring loaded catch

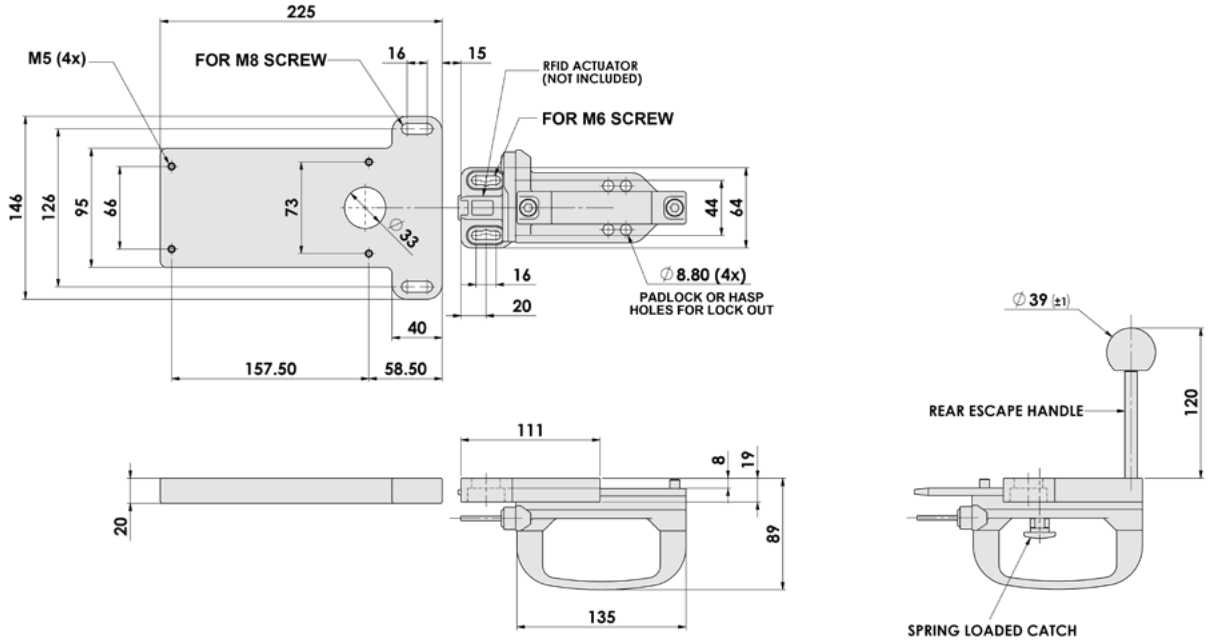

All dimensions in mm


SAFEBALL JSTD1-B
ABB
ABB

Control devices

5–**2** **Introduction and overview**

5–**4** **One- and two-hand devices**
Safeball™

5–**10** **Three-position device**
JSHD4

5–**20** **Three-position device**
HD5

Introduction and overview
Selection guide

ABB offers ergonomic control devices that allow operators to safely control dangerous machinery.

	Safeball	JSHD4	HD5
Image			
Type	One or two-hand control device	Tree-position device	Tree-position device
Description	Ergonomic and unique machine control	Ergonomic hold-to-run device with extra control buttons	Ergonomic hold-to-run device for food and beverage applications
Application	Mainly used in pairs as a two-hand control in applications where it must be ensured that the operator has his hands outside the hazardous area, e.g. for starting a press cycle.	Used during e.g. troubleshooting, test running and programming, in order to allow the operator to be inside the hazardous area without stopping the machine, while ensuring limited movement and stop in case of danger.	
Advantages	- Ergonomic design - Several grip possibilities - Flexible mounting - Two opposing buttons minimize the possibility to defeat	- Ergonomic shape and operation - Hand recognition prevents defeat - Easy connection with M12 connectors - Several models to suit multiple applications - Extra buttons for e.g. machine control	- Adapted and approved for use in food and beverage applications - Ergonomic shape and operation - Flashlight for inspection - Integrated emergency stop - Extra buttons for e.g. machine control

Introduction and overview

Selection orientation

Different types of control devices

When to use a two-hand or one-hand control device
A two-hand control device is often used for machines with manual loading or unloading. The operator uses the two-hand control device to safely start a machine cycle. A two-hand control must be used with a safety control device that supervises that both buttons are pressed simultaneously, i.e. both hands are on the control and therefore outside the dangerous zone, in order to start the dangerous movement. An one-hand control device can be used in applications when the operator cannot reach the hazardous area with his/her free hand, or on less dangerous machines.



When to use a three-position device
A three-position device (or hold-to-run device) is used to allow a limited movement of the machine when the operator needs to be in the dangerous area without stopping the dangerous machine, for example during troubleshooting, test running or programming.

The operator pushes the larger black button to a middle position in order to allow a movement. In case of danger, the operator will either release the button or squeeze it to its bottom position and the machine will stop.

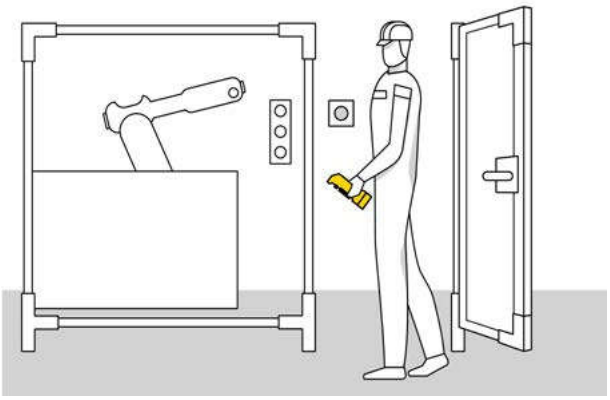

Standards
The safety distance of two-hand control devices should be calculated using EN ISO 13855.

When constructing a two-hand station for a machine, the standard EN 574 about functional aspects and principles for design needs to be followed.

One- and two-hand devices
Safeball™

Safeball™ is an ergonomic control device used for safe start and stop of machine cycles. Usually two Safeball™ are used together to form a two-hand control.

Safeball™ consists of a spherical ball containing two embedded push button switches, one on each side of the ball. Both buttons must be pressed in order to start and operate the machine. The risk of unintentional activation is thereby minimized and the device is simple and ergonomic to use.

When two Safeball™ are used in a two-hand device application, the operator must press all four push buttons simultaneously in order to operate the machine. If one or more of the buttons are released, a stop signal is given to the machine.



Optimum interface

Ergonomic design
The design of Safeball™ allows for comfort of use for all hand sizes and a great variety in gripping positions. And there is no need for shrouding top covers to prevent defeat, as there is for two-hand devices with standard push buttons.

Flexible mounting
With the JSM C5 mounting bracket, Safeball™ can be orientated in the most ergonomic position for the operator.

Safety and protection

Unique design
The unique design of Safeball™ combines the highest level of safety with the best ergonomics.

Highest safety level
Safeball™ provides the operator with a dual switching function and short-circuit supervision in each hand.

Applications and features
Safeball™

Applications

One-hand control device
One Safeball™ can be used as an ergonomic “hold to run” button, i.e. the movement is allowed as long as both push buttons on Safeball™ are pressed, usually when the operator cannot reach the hazardous area with his/her free hand, or on less dangerous machines. Safeball™ is a very practical one-hand control device since it is very easy to locate and activate.



Two-hand control device
A two-hand control device is often used for machines with manual loading or unloading. The operator uses the two-hand
control device to safely start a machine cycle. A two-hand control must be used with a safety control device that makes sure that both buttons are pressed simultaneously, i.e. both hands are on the control and therefore outside the dangerous zone, in order to start the dangerous movement. Using two Safeball™, it is easy to realize a custom two-hand device.



Features

Mounting methods
Safeball™ can be mounted in many different ways. It can be mounted on a table, on the machine, on a support or wherever suitable for ergonomic reasons. Safeball™ can be mounted in a fixed position or on a tilting and/or rotating support when used with a JSM C5. This flexibility in mounting enhances ergonomics and minimizes work-related musculoskeletal disorders.

When two Safeball™ are used as a two-hand device, no shrouding top cover is necessary to prevent defeat, as it is for two-hand devices with push buttons, since it is very difficult to push all 4 push buttons of the two Safeball™ with e.g. a hand and an elbow.

Highest level of safety
When used as a two-hand control device, a safety controller for two-hand devices must be used, like an appropriate Sentry safety relay or a Pluto programmable safety controller. The safety controller monitors that all four push buttons (i.e. on each side of both Safeball™) are pressed within 0.5 second, in order to detect e.g. a short circuit or fraud, like a rubber band around one device. Safeball™ is certified to comply with type III C according to EN 574+A1:2008.

JSTD25
The JSTD25 control stations are pre-built two-hand devices utilizing the good ergonomics of Safeball™. They can be used as fixed devices that are easy to install, or as mobile devices. All models are equipped with shields to protect the buttons from accidental operation, and also protect from damage if the device is dropped on the floor when used as mobile device. All versions meet EN 574 and EN ISO 13849-1.



Ordering information

Safeball™



Safeball™

Safeball™ JSTD1

Types of switches	Cable length	Type	Order code
1 NO + 1 NC	2 m	JSTD1-A	2TLA020007R3000
	0.2 m	JSTD1-B	2TLA020007R3100
	10 m	JSTD1-C	2TLA020007R3200
2 NO	0.2 m	JSTD1-E	2TLA020007R3400



JSTD25F



JSTD25K

Two-hand control devices JSTD25

Extra feature	Connector male	Type	Order code
None	M12-5	JSTD25F	2TLA020007R6000
	M12-8	JSTD25H	2TLA020007R6300
Pre-mounted Smile 10 EK emergency stop button	M12-8	JSTD25K	2TLA020007R6900



JSMC5

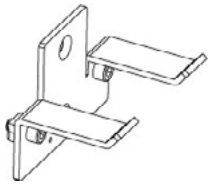

JSMC7

Accessories

Description	Type	Order code
Mounting bracket for JSTD1 with orientation possibility (ball joint)	JSM C5	2TLA020007R0900
Suspension shelf for JSTD25F/H/K	JSM C7	2TLA020007R1200
Protection coat for Safeball	Safeball coat	2TLA020007R1900

Cables and connectors

Safeball™


2TLC172951F0201

M12-C61


2TLC010003F0201

M12-C61HE


2TLC172931F0201

M12-C334

Cable with connectors

Connector	Female/male	Length	Special feature	Type	Order code
M12-5	Female	3 m		M12-C31	2TLA020056R0500
		6 m		M12-C61	2TLA020056R0000
			Harsh environment, halogen free	M12-C61HE	2TLA020056R8000
		10 m		M12-C101	2TLA020056R1000
			Harsh environment, halogen free	M12-C101HE	2TLA020056R8100
		20 m		M12-C201	2TLA020056R1400
	Female + male	0.3 m		M12-C0312	2TLA020056R5800
		0.06 m		M12-C00612	2TLA020056R6300
		1 m		M12-C112	2TLA020056R2000
		3 m		M12-C312	2TLA020056R2100
		6 m		M12-C612	2TLA020056R2200
		10 m		M12-C1012	2TLA020056R2300
			Angled female connector	M12-C1012V2	2TLA020056R6700
		16 m		M12-C1612	2TLA020056R5400
		20 m		M12-C2012	2TLA020056R2400
	Male	6 m		M12-C62	2TLA020056R0200
		10 m		M12-C102	2TLA020056R1200
M12-8	Female	3 m		M12-C33	2TLA020056R2900
		6 m		M12-C63	2TLA020056R3000
		10 m		M12-C103	2TLA020056R4000
		20 m		M12-C203	2TLA020056R4100
	Female + male	0.06 m		M12-C00634	2TLA020056R6400
		1 m		M12-C134	2TLA020056R5000
		3 m		M12-C334	2TLA020056R5100


2TLC172657F0201

M12-C01


2TLC010038F0201

C5 cable

Separate cables and connectors

Description	Type	Order code
Connectors		
M12-5 pole female, straight	M12-C01	2TLA020055R1000
M12-5 pole male, straight	M12-C02	2TLA020055R1100
M12-8 pole female, straight	M12-C03	2TLA020055R1600
M12-8 pole male, straight	M12-C04	2TLA020055R1700
Cable with 5 conductors		
10 m cable with 5 x 0.34 shielded conductors	C5 cable 10 m	2TLA020057R0001
50 m cable with 5 x 0.34 shielded conductors	C5 cable 50 m	2TLA020057R0005
100 m cable with 5 x 0.34 shielded conductors	C5 cable 100 m	2TLA020057R0010
200 m cable with 5 x 0.34 shielded conductors	C5 cable 200 m	2TLA020057R0020
500 m cable with 5 x 0.34 shielded conductors	C5 cable 500 m	2TLA020057R0050
Cable with 8 conductors		
50 m cable with 8 x 0.34 shielded conductors	C8 cable 50 m	2TLA020057R1005
100 m cable with 8 x 0.34 shielded conductors	C8 cable 100 m	2TLA020057R1010
200 m cable with 8 x 0.34 shielded conductors	C8 cable 200 m	2TLA020057R1020
500 m cable with 8 x 0.34 shielded conductors	C8 cable 500 m	2TLA020057R1050

Technical data

Safeball™

Technical data	
Approvals	Inspecta
Conformity	CE 2006/42/EC - Machinery EN ISO 12100:2010, EN 574+A1:2008
Functional safety data	
EN/IEC 61508:2010	Up to SIL3, depending on system architecture
EN/IEC 62061:2005+A1:2013	Up to SILCL3, depending on system architecture
EN ISO 13849-1:2008	Up to Cat. 4, PL e, depending on system
Mechanical data	
Operating force	Approx. 2N
Life, mechanical	> 1 x 10^6 operations at max 1 Hz
Connection cable	
JSTD1-A	PVC-cable, 4 x 0.75 mm^2, L = 2 m
JSTD1-B, JSTD1-E	Wires, 4 x 0.75 mm^2, L = approx. 0.2 m
JSTD1-C	PVC-cable, 4 x 0.75 mm^2, L = 10 m
Protection class	IP67. Not intended for use under water
Ambient temperature	-25 °C to +50 °C (operating)
Material JSTD1	Polypropylene
Weight JSTD1	
With 2 m cable	0.2 kg
With 10 m cable	0.7 kg
With 4 x 0.2 m wires	0.1 kg

More information

Fore more information, e.g. the complete technical information, see product manual for:
Safeball 2TLC172182M0201

Connection diagrams

For Safeball connection diagrams please see https://library.abb.com/

Dimension drawings

Safeball™

Safeball™

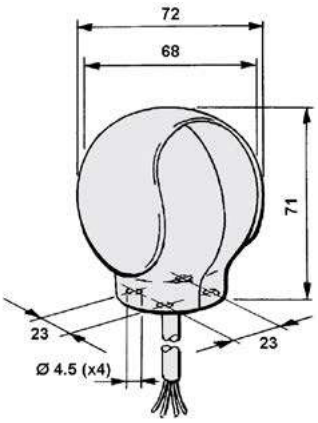

JSTD25F

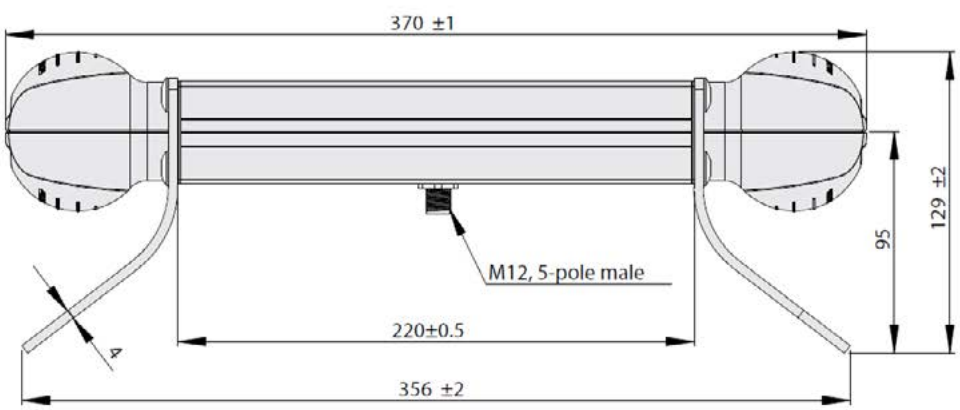

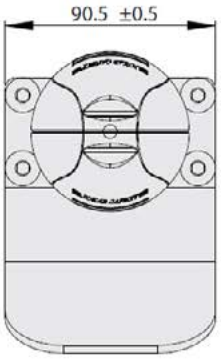

All dimensions in mm

Three-position device
JSHD4

JSHD4 is a three-position device used to allow a limited movement of the machine when the operator is in the dangerous area, for example during troubleshooting, test running and programming.

The operator pushes the larger black button to a middle position in order to allow a movement. In case of danger, the operator will either release the button or squeeze it to its bottom position and the machine will stop.

JSHD4 is available with different types of connectors for an optimal adaptation to the application. Some models offer additional top and front button to control a non-safe signal, for ex. move forward and/or backward.



Safety and protection

Cheat-safe hand recognition
All JSHD4 models comply with PL e/ Cat 4. Some models offer an “anti-tamper” function: an extra signal indicate if the JSHD4 is held in the middle position by a human hand. A machine movement will be authorized only in presence of this signal and not if the device is held in run position by any other (fraudulent) mean.

Optimum interface

Ergonomic shape and operation
JSHD4 is ergonomic, both in respect of its shape, fitting to the hand, and the way the buttons are operated. JSHD4 is easy to operate using just the fingers (even with gloves), and the middle position provides a safe resting position.

Continuous operation

Safely inspect a running machine
JSHD4 allows the operators to safely inspect the manufacturing process without completely stopping the machine.

Applications and features
JSHD4

Applications

Safe troubleshooting, programming and testing
If the operator has to enter a risk area for troubleshooting or test running, it is extremely important that he/she is able to stop the machinery without having to rely on someone else pushing a stop button. In addition, no-one else should be able to start the machinery after it has been stopped by the operator. An operator who is under pressure must also be able to give a stop signal, whether in panic he/she pushes harder on the button or just releases it.

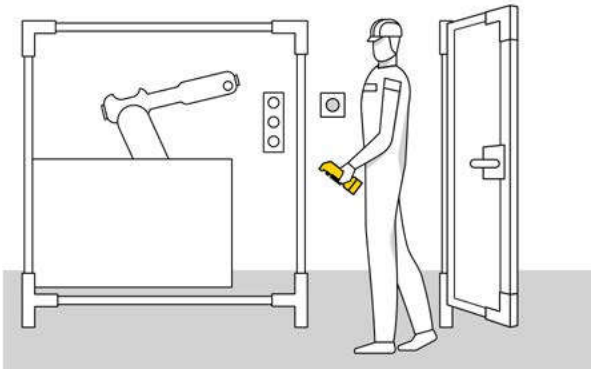

JSHD4 three-position control device can be used for troubleshooting, programming and test running in situations where no other protection is available or feasible. JSHD4 allows the operator to safely inspect the process without completely stopping the machine. The big black button has 3 distinct positions: released, pressed gently and pressed hard. The middle position allows the machine to run with limited speed or range, but when released or pressed hard the machine stops.

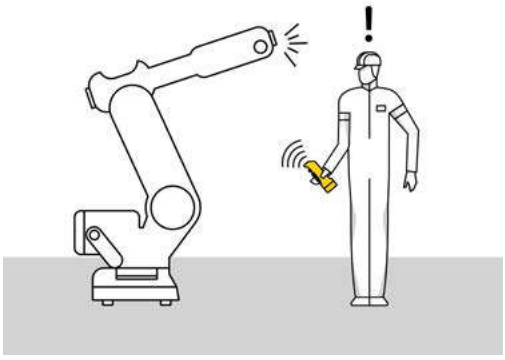

Features

Hand recognition for protection against tampering
An optional “anti-tamper” function sends an extra signal to indicate if the JSHD4 is held by a human hand or not. By using this, the safety level is increased, and the risk of manipulation or bypass of the safety function is reduced. It is no longer possible to expose the operator to danger by trying to lock the three-position control device in run mode.

Ergonomic design
JSHD4 is ergonomic, both in respect of its shape, fitting to the hand and the way the buttons are operated. It is easy to operate the device by using just the fingers (even with gloves), and the middle position provides a secure resting position.

Additional top and front buttons for non-safe signals
The two additional buttons can be used for e.g. start/stop, up/down or forward/ back. These buttons should not be used for safety related functions.

Ordering information

JSHD4



JSHD4-1-AC

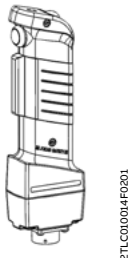

JSHD4-2-AB

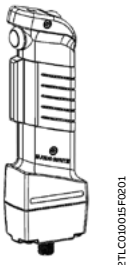

JSHD4-2-AD

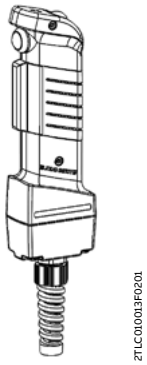

JSHD4-2-AH

Complete list of JSHD4 models

This list shows the possible combination of features. Some combinations can be ordered pre-assembled with a single order code. Other combinations need to be ordered in separate parts (see next page).

Top part	Bottom part			Anti-		
Buttons and LEDs	Feature	ID	Connection	tamper	Type	Order code
JSHD4-1	Use your own cable	AA	Cable gland and 5 screw connections		JSHD4-1-AA	2TLA019995R0000
No LEDs No buttons	Cost effective and quick connection	AC	M12-5 male		JSHD4-1-AC	2TLA019995R0100
	Holder for Eva (used with JSM54)	AL	Cable gland and 10 screw connections		JSHD4-1-AL	Order separate parts
JSHD4-2	Cost effective and robust	AB	Cannon 12 male pins		JSHD4-2-AB	2TLA019995R0200
LEDs Front button Top button				•	JSHD4-2-AB-A	Order separate parts
	Cost effective and quick connection	AD	M12-8 male		JSHD4-2-AD	2TLA019995R0400
				•	JSHD4-2-AD-A	Order separate parts
	Use your own cable, simplified connection	AH	Cable gland and 10 screw connections		JSHD4-2-AH	2TLA019995R0800
				•	JSHD4-2-AH-A	Order separate parts
	Use your own cable, full pin connection	AJ	Cable gland and 16 screw connections		JSHD4-2-AJ	Order separate parts
				•	JSHD4-2-AJ-A	Order separate parts
	Replacement of old units*	AK	Cannon 12 male pins		JSHD4-2-AK	2TLA019995R4800
	Holder for Eva (used with JSM54)	AL	Cable gland and 10 screw connections		JSHD4-2-AL	Order separate parts
				•	JSHD4-2-AL-A	Order separate parts
JSHD4-3	Cost effective and robust	AB	Cannon 12 male pins		JSHD4-3-AB	Order separate parts
LEDs No buttons				•	JSHD4-3-AB-A	Order separate parts
	Cost effective and quick connection	AD	M12-8 male		JSHD4-3-AD	Order separate parts
				•	JSHD4-3-AD-A	Order separate parts
	E-stop	AE	M12-8 male		JSHD4-3-AE	Order separate parts
	Use your own cable, simplified connection	AH	Cable gland and 10 screw connections		JSHD4-3-AH	2TLA019995R2000
				•	JSHD4-3-AH-A	Order separate parts
	Use your own cable, full pin connection	AJ	Cable gland and 16 screw connections		JSHD4-3-AJ	Order separate parts
				•	JSHD4-3-AJ-A	Order separate parts
	Replacement of old units*	AK	Cannon 12 male pins		JSHD4-3-AK	Order separate parts
	Holder for Eva (used with JSM54)	AL	Cable gland and 10 screw connections		JSHD4-3-AL	Order separate parts
				•	JSHD4-3-AL-A	Order separate parts
JSHD4-4	Cost effective and robust	AB	Cannon 12 male pins		JSHD4-4-AB	Order separate parts
LEDs Front button				•	JSHD4-4-AB-A	Order separate parts
	Cost effective and quick connection	AD	M12-8 male		JSHD4-4-AD	Order separate parts
				•	JSHD4-4-AD-A	Order separate parts
	Use your own cable, simplified connection	AH	Cable gland and 10 screw connections		JSHD4-4-AH	Order separate parts
				•	JSHD4-4-AH-A	Order separate parts
	Use your own cable, full pin connection	AJ	Cable gland and 16 screw connections		JSHD4-4-AJ	Order separate parts
				•	JSHD4-4-AJ-A	Order separate parts
	Replacement of old units*	AK	Cannon 12 male pins		JSHD4-4-AK	Order separate parts
	Holder for Eva (used with JSM54)	AL	Cable gland and 10 screw connections		JSHD4-4-AL	Order separate parts
				•	JSHD4-4-AL-A	Order separate parts
JSHD4-5	Cost effective and robust	AB	Cannon 12 male pins		JSHD4-5-AB	Order separate parts
LEDs Top button				•	JSHD4-5-AB-A	Order separate parts
	Cost effective and quick connection	AD	M12-8 male		JSHD4-5-AD	Order separate parts
				•	JSHD4-5-AD-A	Order separate parts
	Use your own cable, simplified connection	AH	Cable gland and 10 screw connections		JSHD4-5-AH	Order separate parts
				•	JSHD4-5-AH-A	Order separate parts
	Use your own cable, full pin connection	AJ	Cable gland and 16 screw connections		JSHD4-5-AJ	Order separate parts
				•	JSHD4-5-AJ-A	Order separate parts
	Replacement of old units*	AK	Cannon 12 male pins		JSHD4-5-AK	Order separate parts
	Holder for Eva (used with JSM54)	AL	Cable gland and 10 screw connections		JSHD4-5-AL	Order separate parts
				•	JSHD4-5-AL-A	Order separate parts

* See document 2TLC010007L0201 for information about replacement

Ordering information

JSHD4



JSHD4-2 Top part



AA, AH, AJ - Cable gland



AB, AK - Cannon connection



AC, AD - M12 connection



AE - M12 with E-stop



AL - Cable gland and holder for Eva (used with JSM54)



Anti-tamper PCB

Top parts, bottom parts and anti-tamper

To order a complete JSHD4, a top part and a bottom part must be included.
Don't forget the anti-tamper PCB if required.

For example, if you want to order a JSHD4-3-AB-A, please order
- JSHD4-3 top part
- JSHD4 AB bottom part
- Anti-tamper PCB (the "-A" at the end of the designation stands for Anti-tamper)

Please note that all combinations are not compatible. See previous page for possible combinations.

Description	Type	Order code
Top parts		
Top part with no LEDs, no buttons	JSHD4-1 Top part	2TLA020006R2100
Top part with LEDs, front and top buttons	JSHD4-2 Top part	2TLA020006R2200
Top part with LEDs, no buttons	JSHD4-3 Top part	2TLA020006R2300
Top part with LEDs, front button	JSHD4-4 Top part	2TLA020006R2400
Top part with LEDs, top button	JSHD4-5 Top part	2TLA020006R2500
Bottom parts		
Bottom part with cable gland	JSHD4 AA	2TLA020005R1000
Bottom part with Cannon connector	JSHD4 AB	2TLA020005R1100
Bottom part with M12-5 connector	JSHD4 AC	2TLA020005R1200
Bottom part with M12-8 connector	JSHD4 AD	2TLA020005R1300
Bottom part with M12-8 connector and E-stop button	JSHD4 AE	2TLA020005R1400
Bottom part with cable gland and PCB with 10 screw terminals	JSHD4 AH	2TLA020005R1700
Bottom part with cable gland and PCB with 16 screw terminals	JSHD4 AJ	2TLA020005R1800
Bottom part with cannon connector (replacement of former JSHD4)	JSHD4 AK	2TLA020005R1900
Bottom part with cable gland and holder for Eva	JSHD4 AL	2TLA020005R2000
Anti tamper		
Anti-tamper PCB	JSHD4 Anti-tamper	2TLA020005R0900

Cables and connectors

JSHD4



M12-C61



M12-C61HE



M12-C334



HK20S4



M12-C01



C5 cable

Cable with connectors

Connector	Female/male	Length	Special feature	Type	Order code
M12-5	Female	3 m		M12-C31	2TLA020056R0500
		6 m		M12-C61	2TLA020056R0000
			Harsh environment, halogen free	M12-C61HE	2TLA020056R8000
		10 m		M12-C101	2TLA020056R1000
			Harsh environment, halogen free	M12-C101HE	2TLA020056R8100
		20 m		M12-C201	2TLA020056R1400
	Female + male	0.3 m		M12-C0312	2TLA020056R5800
		0.06 m		M12-C00612	2TLA020056R6300
		1 m		M12-C112	2TLA020056R2000
		3 m		M12-C312	2TLA020056R2100
		6 m		M12-C612	2TLA020056R2200
		10 m		M12-C1012	2TLA020056R2300
		16 m		M12-C1612	2TLA020056R5400
		20 m		M12-C2012	2TLA020056R2400
	Male	6 m		M12-C62	2TLA020056R0200
		10 m		M12-C102	2TLA020056R1200
M12-8	Female	3 m		M12-C33	2TLA020056R2900
		6 m		M12-C63	2TLA020056R3000
		10 m		M12-C103	2TLA020056R4000
		20 m		M12-C203	2TLA020056R4100
	Female + male	0.06 m		M12-C00634	2TLA020056R6400
		1 m		M12-C134	2TLA020056R5000
		3 m		M12-C334	2TLA020056R5100
Cannon	Female	5 m		HK5	2TLA020003R4700
		10 m		HK10	2TLA020003R4800
		20 m		HK20	2TLA020003R4900
		1.6 m	Spiral cable	HK16S4	2TLA020003R5000
		2 m	Spiral cable	HK20S4	2TLA020003R5100
		3.2 m	Spiral cable	HK32S4	2TLA020003R5200
		4 m	Spiral cable	HK40S4	2TLA020003R3500
		6 m	Spiral cable	HK60S4	2TLA020003R3600
		8 m	Spiral cable	HK80S4	2TLA020003R5300

Separate cables and connectors

Description	Type	Order code
Connectors		
M12-5 pole female, straight	M12-C01	2TLA020055R1000
M12-5 pole male, straight	M12-C02	2TLA020055R1100
M12-8 pole female, straight	M12-C03	2TLA020055R1600
M12-8 pole male, straight	M12-C04	2TLA020055R1700
12-pole female cannon connector for JSHD4	JSHK0	2TLA020003R0300
Cable with 5 conductors		
10 m cable with 5 x 0.34 shielded conductors	C5 cable 10 m	2TLA020057R0001
50 m cable with 5 x 0.34 shielded conductors	C5 cable 50 m	2TLA020057R0005
100 m cable with 5 x 0.34 shielded conductors	C5 cable 100 m	2TLA020057R0010
200 m cable with 5 x 0.34 shielded conductors	C5 cable 200 m	2TLA020057R0020
500 m cable with 5 x 0.34 shielded conductors	C5 cable 500 m	2TLA020057R0050
Cable with 8 conductors		
50 m cable with 8 x 0.34 shielded conductors	C8 cable 50 m	2TLA020057R1005
100 m cable with 8 x 0.34 shielded conductors	C8 cable 100 m	2TLA020057R1010
200 m cable with 8 x 0.34 shielded conductors	C8 cable 200 m	2TLA020057R1020
500 m cable with 8 x 0.34 shielded conductors	C8 cable 500 m	2TLA020057R1050

Accessories

JSHD4

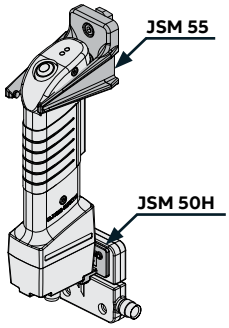

JSM 55 wall bracket and JSM 50H bracket for Eden

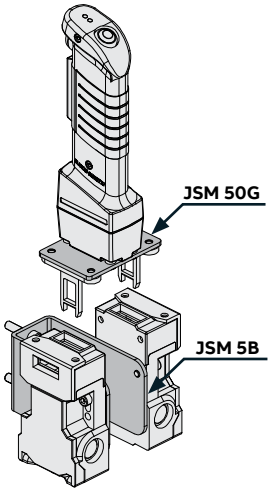

JSM 50G bracket for key switches and JSM 5B wall bracket for 2 pcs MKey5

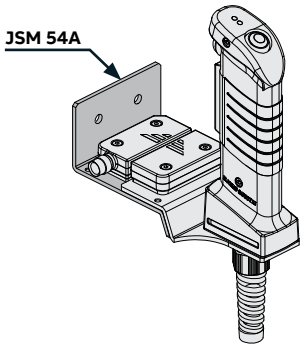

JSM 54A wall bracket for Adam (and AL bottom part that has a holder for Eva)



JSHD4 protection coat

Accessories

Description	Type	Order code
Brackets and bottom plates		
JSM 55 Wall bracket for three position device	JSM 55	2TLA040005R0500
JSM 5B Wall bracket for 2 pcs MKey5 interlock switches	JSM 5B	2TLA040005R0700
JSM 54A Wall bracket for Adam. Used with AL bottom part that has a holder for Eva	JSM 54A	2TLA020205R2800
JSM 50G Bracket for key switches	JSM 50G	2TLA020205R6300
JSM 50H Bracket for Eden sensor	JSM 50H	2TLA020205R6400
Others		
JSHD4 protection coat	JSHD4 Coat	2TLA020200R4600

Accessories
JSHD4

JSHD4H2
The three-position button of JSHD4 is available as a separate part for either external mounting or panel mounting. JSHD4H2A/B are intended for mounting on the back side of a handheld teaching pendant or similar.
JSHD4H2 can be mounted in a panel hole.



JSHD4H2A



JSHD4H2B



JSHD4H2

Mounting	Leads	Hand	Type	Order code
External mounting	6 x 150 mm	Left	JSHD4H2A	2TLA020002R0200
		Right	JSHD4H2B	2TLA020002R0210
Internal panel mounting	6 x 150 mm	-	JSHD4H2 0.15 m	2TLA020002R3100
	6 x 1200 mm	-	JSHD4H2 1.2 m	2TLA020002R4500

Electrical wiring diagrams

Examples with JSHD4-1 and JSHD4-2 models



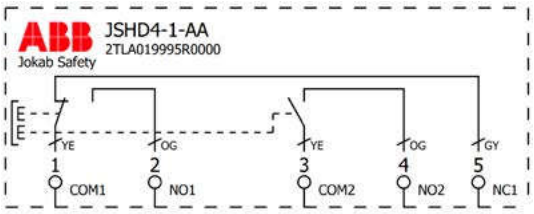

JSHD4-1-AA, cable gland and 5 screw connections on JSHD4-1

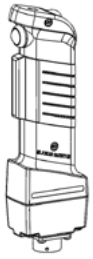

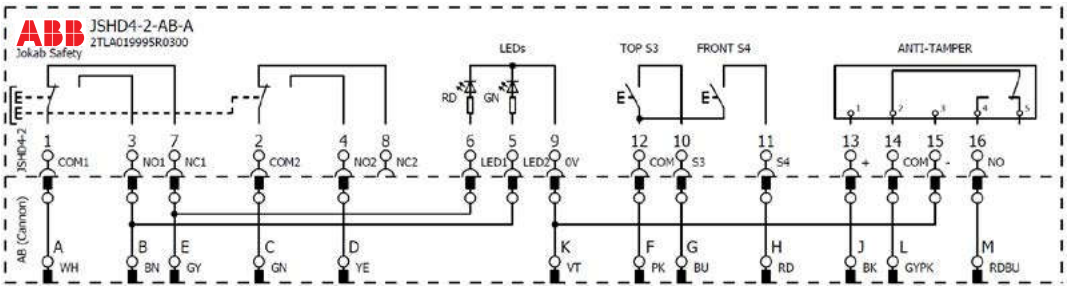

JSHD4-2-AB-A, Cannon 12 pins

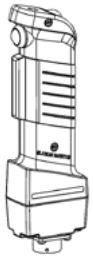

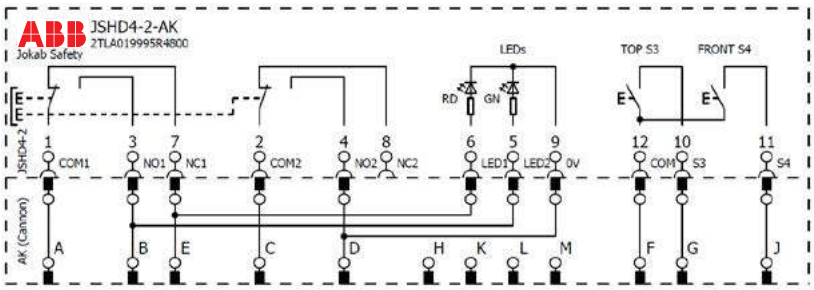

JSHD4-2-AK, Cannon 12 pins

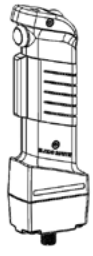

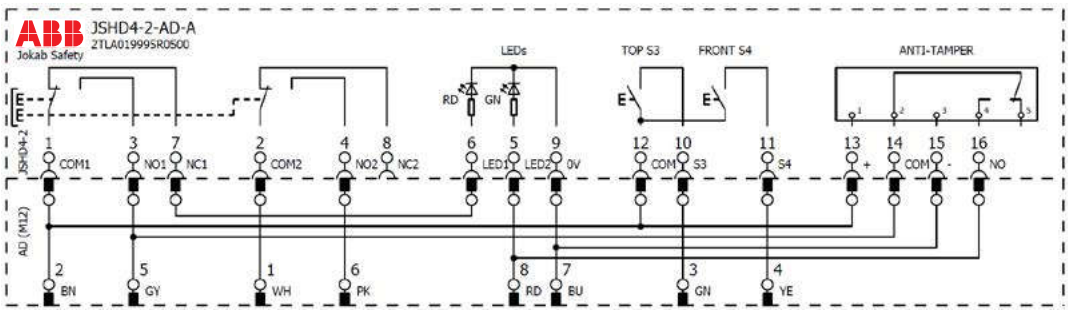

JSHD4-2-AD-A, M12-8

Electrical wiring diagrams

Examples with JSHD4-2 models



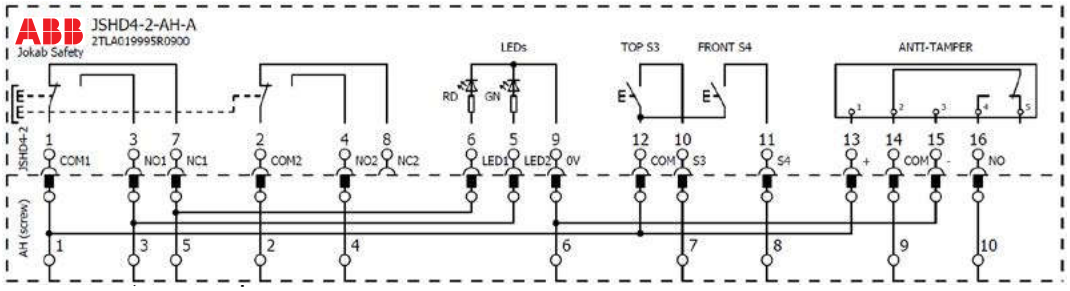

JSHD4-2-AH-A, cable gland and 10 screw connection

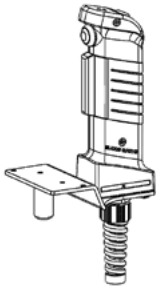

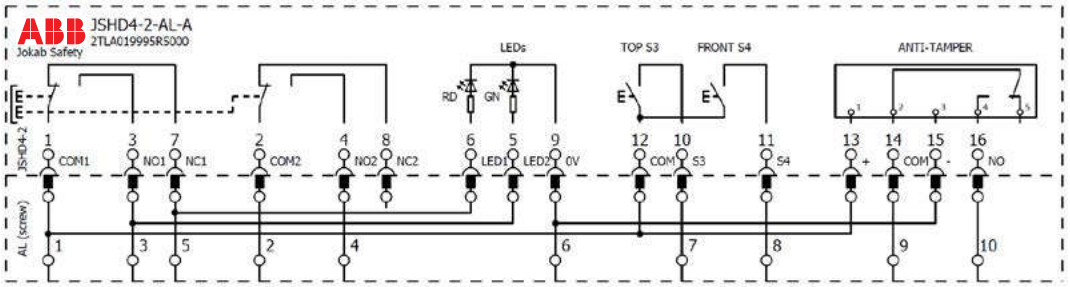

JSHD4-2-AL-A, cable gland and 10 screw connection



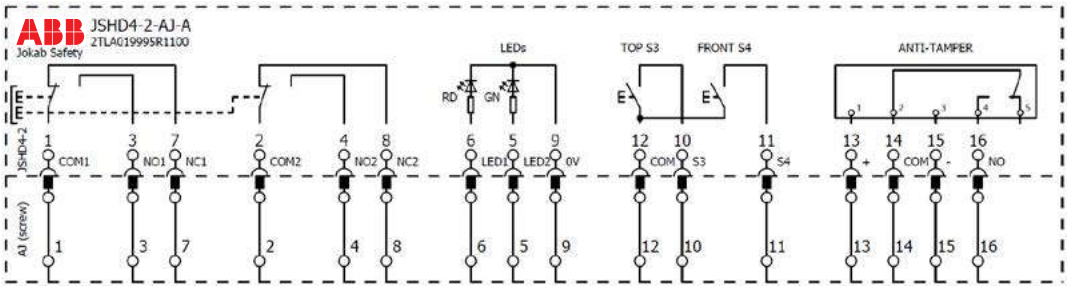

JSHD4-2-AJ-A, cable gland and 16 screw connection

Technical data and dimension drawings

JSHD4

Technical data	
Approvals	Inspecta
Conformity	CE 2006/42/EC - Machines 2014/30/EU - EMC 2011/65/EU - RoHS EN ISO 12100-1:2010, EN ISO 13849-1:2015, EN ISO 13849-2:2012, EN 60204-1:2006+A1:2009, EN 61000-6-2:2005, EN 61000-6-3:2007
Functional safety data	
EN ISO 13849-1:2016	Up to PL e (depending on number of operations per year) B_{10d}: 2 000 000 to middle position, 968 000 to bottom position
Electrical data	
Current allowed, three-position button	Per channel: Maximum +30 VDC, 20 mA, (Minimum +10 VDC, 8 mA)
Current allowed, extra button	Maximum 500 mA
Operation force	Approx. 15 N for three-position buttons (ON)
	Approx. 45 N for three-position buttons (OFF)
	Approx. 2.5 N for top/front push button
Mechanical data	
Operating temperature	- 10 ...+50 °C
Protection class	IP65
Mechanical life	1 000 000 cycles to middle position
Weight	Approx. 0.2 kg without cable

More information

Fore more information, e.g. the complete technical information, see product manual for:
JSHD4 2TLC172072M0201

Dimension drawings

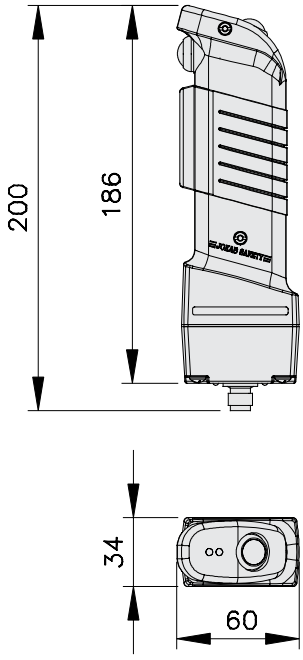

JSHD4-2-AD

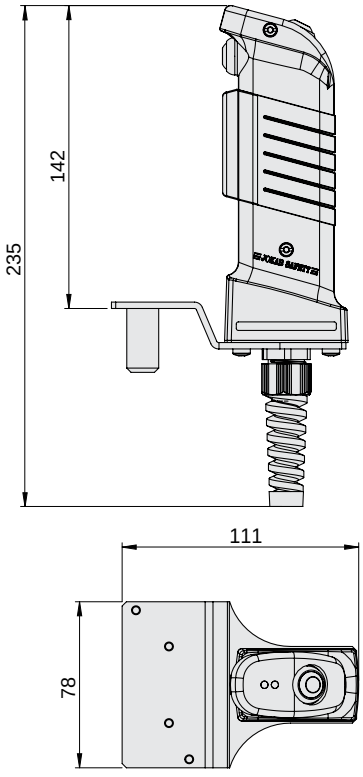

JSHD4-2-AL

All dimensions in mm

Three-position device
HD5

HD5 is a three-position device developed to meet most demands of the Food and Beverage industry.

A three-position device is used to allow a limited movement of the machine when the operator is in the dangerous area, for example during troubleshooting, test running and programming. The operator pushes the larger black button to a middle position in order to allow a movement. In case of danger, the operator will either release the button or squeeze it to its bottom position and the machine will stop.

The housing of the HD5 is made of PPh, that not only is approved for contact with foodstuff, but also resists the most commonly used chemicals during cleaning in the Food and Beverage industry. Without sharp edges, there are no places where dirt and bacteria can be accumulated. The construction of the HD5 prevents condensation inside the product when subject to temperature changes in a wet environment. The PPh used is fiberglass reinforced to prevent breakage and minimize risk of small broken bits falling in the foodstuff.



Safety and protection

Safe inspection
Up to PL e/Cat 4, with TÜV and cULus approval.
Home position sensor to detect when the device is out of its holder.

Optimum interface

Ergonomic, flexible and suitable for Food and Beverage
HD5 is easy to operate with additional buttons, integrated emergency stop button and flash-light.
Housing material minimizes risk of breakage and is approved for contact with foodstuff.
No places where dirt and bacteria can be accumulated.

Continuous operation

Avoid unnecessary process stops
HD5 allows the operators to safely inspect the manufacturing process without completely stopping the machine.
Resistant to most cleaning fluids and chemicals in Food and Beverage.

Applications and features
HD5

Applications

Safe troubleshooting, programming and testing
If the operator has to enter a risk area for troubleshooting or test running, it is extremely important that he/she is able to stop the machinery without having to rely on someone else pushing a stop button. In addition, no-one else should be able to start the machinery after it has been stopped by the operator. An operator who is under pressure must also be able to give a stop signal, whether in panic he/she pushes harder on the button or just releases it.

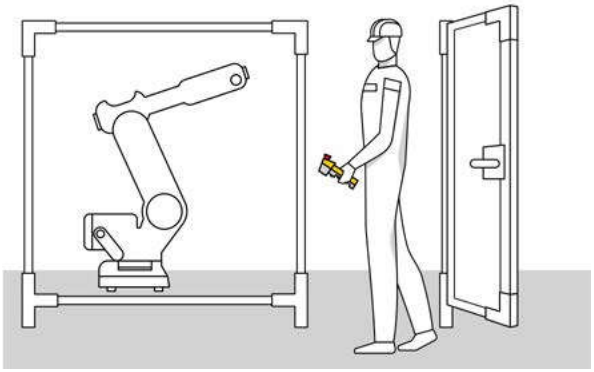

HD5 three-position control device can be used for troubleshooting, programming and test running in situations where no other protection is available or feasible. HD5 allows the operator to safely inspect the process without completely stopping the machine. The big black button has 3 distinct positions: released, pressed gently and pressed hard. The middle position allows the machine to run with limited speed or range, but when released or pressed hard the machine stops.

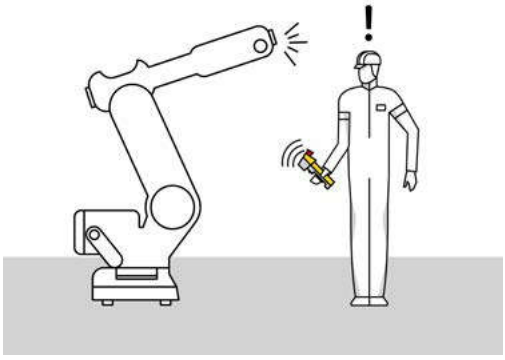

Features

Indication LEDs
Green and a red high intensity LEDs are integrated in the top of the houding. Their function is user-defined and they can be used, e.g. to indicate whether the three-position device is in the middle position or not.

Front button and top buttons
The function of the additional buttons is user-defined. They can be used, e.g. for a start/stop function for individual movements etc.

Flashlight
An integrated flashlight can be used to help e.g. troubleshooting in dark spaces.

Home position sensor
Used with an active holder, this sensor detects whether the HD5 is in place in its holder.

Emergency stop button with integrated LED in housing
Some models are fitted with an emergency stop button and two rows of LEDs are integrated into the housing of the HD5, below the emergency stop button, one green and one red.

Adapted to food and beverage
HD5 is specifically developed with focus on the requirements in food and beverage applications.
- It has an hygienic design with rounded edges and leaning surfaces to prevent collection of water and dirt.
- The operating surfaces of the buttons are directly injected in the housing.
- The plastics used are approved for food and beverage industry (PHH G30).
- The markings are laser permanent in order not to contaminate any food.
- An anti-condensation membrane prevents moist from building up inside.

Ordering information

HD5



HD5-S-102



HD5-S-104



HD5-S-111



HD5-M-001

HD5 ordering information

AS-i interface	Emergency stop with LED	Home position sensor	Motion sensor	LED flashlight	Connector	Two top buttons	Type	Order code
No	No	No	No	No	M23-12	No	HD5-S-102	2TLA023001R0000
						Yes	HD5-S-104	2TLA023001R0200
	Yes	Yes	Yes	Yes	M23-19	Yes	HD5-S-111	2TLA023001R0100
Yes	Yes	Yes	Yes	Yes	M12-5	Yes	HD5-B-101	2TLA920502R0003
	No	Yes	Yes	Yes	M12-5	Yes	HD5-B-102	2TLA920502R0004

HD5 accessories

Description	Suitable for	Type	Order code
Active holder (for home position sensor)	All models	HD5-M-001	2TLA920509R0001
Passive holder	All models	HD5-M-002	2TLA920509R0002
5 m cable with M23-12 female connector	HD5-S-102/104	JSD-TK5-12	2TLA930050R0000
10 m cable with M23-12 female connector	HD5-S-102/104	JSD-TK10-12	2TLA930051R0000
10 m spiral cable with M23-12 female connector	HD5-S-102/104	JSD-TK100S-12	2TLA930034R0000
5 m cable with M23-19 female connector	HD5-S-111	JSD-TK5-19	2TLA930057R0000
10 m cable with M23-19 female connector	HD5-S-111	JSD-TK10-19	2TLA930058R0000
5 m unshielded cable with M12-5 female connector	HD5-B-101/102	M12-C51-ASi	2TLA910093R0000
2.5 m unshielded spiral cable with M12-5 female connector	HD5-B-101/102	M12-C251S-ASi	2TLA910094R0000

Technical data

HD5

Technical data	
Approvals	
Conformity	CE 2006/42/EC - Machines 2014/30/EU - EMC 2011/65/EU - RoHS 2 2015/863/EU - RoHS 3 EN ISO 12100-1:2010, EN ISO 13849-1:2015, EN 62061:2015, EN 60204-1:2006+A1:2009
Functional safety data	
Three-position switches	Up to PL e, category 4, SILCL3
Three-position switches	B_{10d}: 2 000 000 released to middle to released position B_{10d}: 968 000 middle to end to middle position
Emergency stop button	B_{10d}: 250 000
Electrical data	
Operational voltage	
HD5-S	24 VDC, tolerance 20.4 - 27.6 VDC
HD5-B	30 VDC, AS-i bus, tolerance 26 - 31,6 VDC
Overall power consumption	< 150 mA
Connection	
HD5-S	M23 male connector, 12 or 19 pin
HD5-B	M12 male connector, 5 pins
Actuating force	
Three-position button	Approx. 20 N from release to middle position Approx. 45 N from middle to end position
Additional buttons	Approx. 3 N for front button Approx. 7 N for top button
Mechanical data	
Operating temperature	- 10 ...+50 °C (no icing, no direct sunlight)
Protection class	IP65
Weight	Approx. 0.2 kg without connection cable
Material	
Housing	Fiberglass reinforced plastic, PPh + 30% glass fibre
Holders	Fiberglass reinforced plastic, PPh + 30% glass fibre
Operating buttons	TPE

More information

Fore more information, e.g. the complete technical information, see product manual for:
HD5-S 2TLC010052M0201
HD5-B 2CDC172107D0201

Dimension drawings

HD5

Dimension drawings

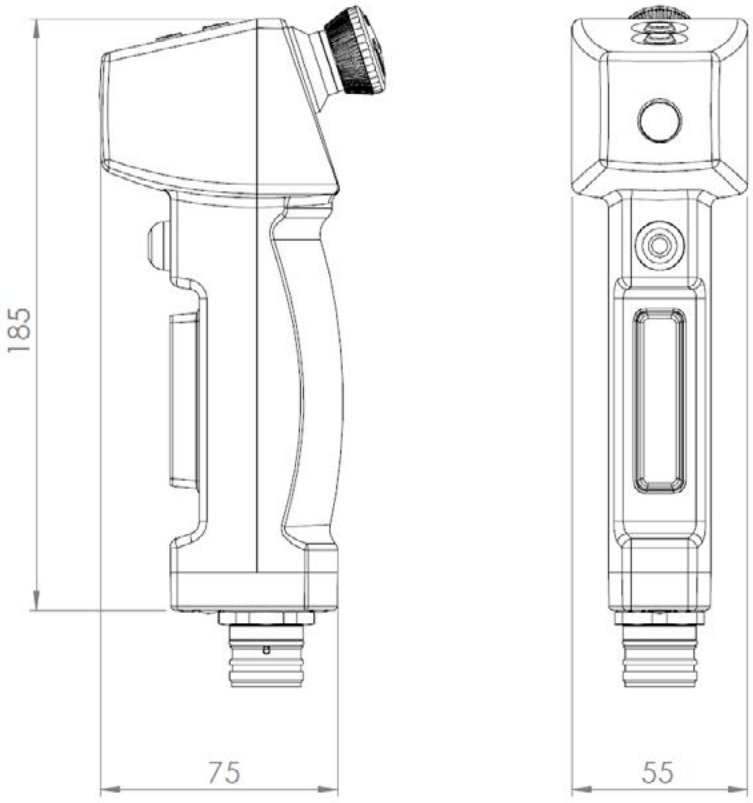

HD5-S-111

All dimensions in mm


ABB
Smile 41 EWWWP
ABB SMILE 11 EC Tina
ABB SMILE 12 EA
ABB LineStrong3D
ABB EStrongZ

Emergency stops and pilot devices

6–**2** **Introduction and overview**

6–**6** **Emergency stop buttons**
Smile, INCA, EStrong and Compact

6–**16** **Safety stop buttons**
Smile, INCA, and Compact

6–**24** **Pull wire emergency stop switch**
LineStrong

6–**34** **Push-button box**
Smile 41

6–**40** **Reset button**
Smile

6–**46** **Pilot devices**
Modular and Compact range

Introduction and overview
Selection guide

ABB offers a full range of buttons and pull wires for emergency stop functions, as well as pilot devices for e.g. reset functions.

	Emergency stop buttons	Safety stop buttons	Reset buttons
Name	**Smile, Inca, EStrong, Compact**	**Smile, Inca, Compact**	**Smile**
Image			
Description	Emergency stop buttons for external mounting and panel mounting in different sizes and material	Safety stop buttons for external mounting and panel mounting	Small and easy to install reset button
Applications	Safely stop dangerous machine functions	Safely stop a limited part of a dangerous machine	Pushbutton for resetting safety devices
Advantages	Models with: - Compact size - Robust enclosure for harsh environments - Quick installation with M12 connectors - LED indication	Models with: - Compact size - Robust enclosure for harsh environments - Quick installation with M12 connectors - LED indication	- Compact size - Quick installation - M12 connector - LED indication

	Pull wire emergency stop switches	Push button boxes	Pilot devices
Name	**LineStrong**	**Smile 41**	**Modular range, compact range**
Image			
Description	Emergency stop switches in robust enclosures for pull wires of various lengths.	Gathers up to four push buttons, including emergency stop, in a single compact device	Push buttons, selector switches, pilot lights, joysticks and signal towers in a compact and robust design
Applications	Emergency stop line to safely stop conveyor belts and long transportation lines.	Emergency stop and pushbuttons in one device	For control and indication of machines and processes
Advantages	- Up to 200 m wire with one switch - Reliable mechanical connection - Robust construction	- Compact size - Quick installation - M12 connector - LED indication - Highly adaptable with several button colors	- Compact size - Up to IP69K - Long life-time thanks to self-cleaning contacts - Quick snap-on design for simple installation without tools

Introduction and overview
Selection orientation

Why an emergency stop is necessary
If a machine breaks down or if someone is in danger, anyone should be able to stop the machine, regardless of their knowledge of the specific application.



When a safety stop could be used
A safety stop (also called machine stop) should be used to safely stop a part of the machine, e.g. as a stop for an individual hazardous motion. It should not be used as an emergency stop and stop the complete machine. Likewise, an emergency stop with red push button must not be used as a safety stop.

In order to separate the safety stop function from the emergency stop function, the safety stop buttons should be colored black.



When a pull wire emergency stop could be used
A pull wire emergency stop is easier to install than a system of several emergency stop buttons along a carriage path which makes it ideal for installations over long distances. LineStrong can handle wires up to 200 m on one single switch and the emergency command can be initiated from any point along the installed wire length.



Introduction and overview
Standards

Important standards to follow when implementing emergency stop functions are e.g. EN ISO 13850 and EN ISO 60204-1.

Stop categories
The following stop categories are defined in the standards:

Stop Category 0	stopping by immediate removal of power to the machine actuators
Stop Category 1	a controlled stop with power available to the machine actuators to achieve the stop and then removal of power when the stop is achieved
Stop Category 2	a controlled stop with power left available to the actuators

Note that these categories should not be confused with the categories used to describe the architecture when calculating PL in EN ISO 13849. The risk assessment should determine which stop category to use, but stop category 2 is normally considered not to be suitable for emergency stops.

Text and symbols
Neither the emergency stop nor its background should be labelled with text or symbols. It has previously been common with white arrows indicating the direction of unlatching, but this is not allowed anymore.

Location and signs
The risk assessment should determine the locations of the emergency stop buttons, but they should in general be placed at operator stations, at locations where man/machine interaction is required and at entry/exit points. Signs to mark the location of emergency stops are not required, but if used they should be green with white markings.

Emergency stop buttons
Smile, INCA, EStrong and Compact

Emergency stop buttons are used to safely stop dangerous machine functions.

ABB offers a wide range of emergency stop buttons for external mounting or panel mounting, with plastic or metal housing and for different types of connections.



Easy to install

Compact size
Models with a compact and appealing housing saves space and makes it easy to place.

Quick installation
Quick and easy installation of models with features such as centered mounting holes, removable terminal blocks and M12 connectors.

Serial connection
Tina models save cable length and installation time with serial connection.

Optimum interface

Highly adaptable
Several models to choose between depending on position, installation and function.

Reliable in extreme conditions
Robust models and models in stainless steel for use in demanding environments.

Continuous operation

LED diagnostics
Models with integrated LED diagnostics reduce downtime when troubleshooting.

Models and application
Emergency stop buttons

Models for external mounting

Smile
Smile is a small and easy to install emergency stop button. Its size allows mounting in reduced spaces, and its centered mounting holes makes it especially easy to mount on aluminum extrusions (e.g. Quick-Guard fencing system).
Smile is available with M12 connectors or cable.
Smile has an integrated LED in the button that shows the status and simplifies error tracking.
The standard models of Smile have 2 contacts and can be used with safety controllers from all brands. Smile Tina models belong to the ABB DYNlink solution, with the advantages of serial connection using only one channel and still reaching Cat. 4/PL e.



Compact
Compact emergency stop buttons offer a robust enclosure with a high IP rating that fulfill the demands in severe and humid environments, such as food and beverage industry.
Compact can be fitted with a Tina adapter for use in a DYNlink solution (Tina 2A, Tina 2B or Tina 3A).



EStrong
EStrong is an emergency stop button designed to provide a robust unit in exposed and severe environments. The unit has a stainless steel enclosure with IP69K rating that withstands high pressure and high temperature wash-down. It is therefore ideally suited for industries with special demands, such as food processing or chemical industry.



Models for panel mounting

INCA
INCA is an emergency stop button for panel mounting, designed for installation in 22.5 mm holes. Its removable terminal block facilitates connection and exchange.
INCA has an integrated LED in the button that shows the status and simplifies error tracking.
The standard model of INCA has 2 contacts and can be used with safety controllers from all brands. INCA Tina models belongs to the ABB DYNlink solution, with the advantages of serial connection using only one channel and still reaching Cat. 4/PL e.



Smile Reverse
Smile Reverse is identical to the regular Smile emergency stop button besides from being reversed in order to be mounted on the back side of a panel. Smile Reverse has an IP65 housing that makes it suitable in panels where moisture and dust may occur.
Smile Reverse has an integrated LED in the button that shows the status and simplifies error tracking.
The standard model of Smile Reverse has 2 contacts and can be used with safety controllers from all brands. The Smile Reverse Tina model belongs to the ABB DYNlink solution, with the advantages of serial connection using only one channel and still reaching Cat. 4/PL e.



Application

Emergency stop buttons are used to safely stop a dangerous machine function in order to prevent an accident, or minimize the consequences of an accident. An emergency stop should be a complement to other safety devices, and not a replacement for them.



Features

Emergency stop buttons

Communication features

DYNlink

Emergency stop buttons with Tina in their name belong to the DYNlink solution, which enables serial connection using only one channel and still reaching Cat. 4/PL e. DYNlink devices must be used with Vital safety controller or Pluto programmable safety controller. Up to 30 DYNlink devices can be connected in series to Vital and up to 10 can be connected to each input on Pluto.

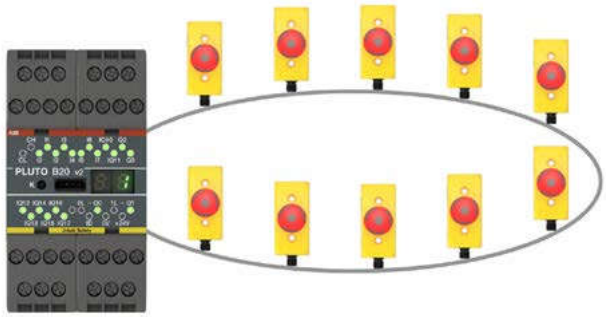

StatusBus

StatusBus is a simple and cost effective way to collect the status information of emergency stops and safety sensors. The StatusBus functionality is available with some DYNlink devices and allows to collect the status of each individual safety device, even when connected in series. A Pluto programmable safety controller must be used to read the StatusBus information, and a single input on Pluto can collect the status of up to 30 safety devices. The devices are connected using standard cable and M12-5 connectors. No specific bus cable or extra communication module is necessary.

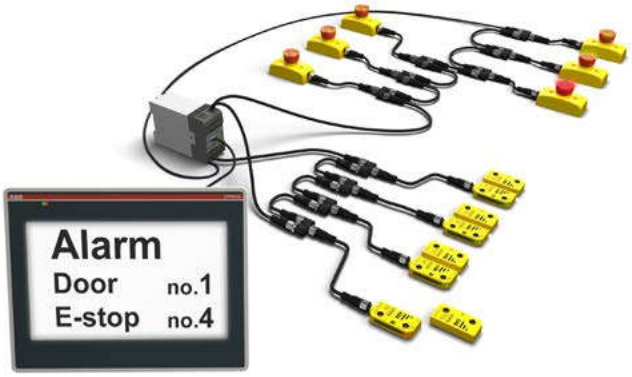

Ordering information

Emergency stop buttons



2TLC172863F0201

Smile 10 EA Tina



2TLC172857F0201

Smile 11 EC Tina



2TLC172187F0201

Smile 12 EA



ABB Compact emergency stop shroud



2TLC172689F0201

EStrongZ and EStrongZ LED

External mounting

Description	Type of safety signal	Connection type	Feature	Type	Order code
Compact size Plastic housing IP65	DYNlink	1 m cable from bottom	Status LED	Smile 10 EA Tina	2TLA030050R0400
		1 x M12-5 male	Status LED	Smile 11 EA Tina	2TLA030050R0000
		1 x M12-5 male	Status LED, StatusBus	Smile 11 EC Tina	2TLA030050R0900
		2 x M12-5 male	Status LED	Smile 12 EA Tina	2TLA030050R0200
	2 NC	1 m cable from bottom	Status LED	Smile 10 EA	2TLA030051R0400
		1 m leads from bottom	-	Smile 10 EK	2TLA030051R0600
		1 x M12-5 male	Status LED	Smile 11 EA	2TLA030051R0000
		2 x M12-5 male	Status LED	Smile 12 EA	2TLA030051R0200
Plastic housing IP66, IP67 and IP69K	2 NC*	2 x M20 conduits	-	CEPY1-1002 (Compact)	1SFA619821R1002
			With shroud	CEPY1-2002 (Compact)	1SFA619821R2002
Metal housing IP67 and IP69K	2 NO + 2 NC	3 x M20 conduits	Status LED	EStrongZ LED	2TLA050220R0222
			-	EStrongZ	2TLA050220R0020

* Can be adapted to DYNlink with Tina



2TLC172861F0201

Smile 11 EAR



2TLC172363F0201

INCA 1

Panel mounting

IP rating	Depth	Connection type	Type of safety signal	Feature	Type	Order code
IP65	26 mm	1 x M12-5 male	DYNlink	Status LED	Smile 11 EAR Tina	2TLA030050R0100
			2 NC	Status LED	Smile 11 EAR	2TLA030051R0100
Button IP65, connector IP20	53 mm	Removable terminal block	DYNlink	Status LED	INCA 1 Tina	2TLA030054R0000
				Status LED, StatusBus	INCA 1 EC Tina	2TLA030054R1400
			2 NC	Status LED	INCA 1	2TLA030054R0100

Accessories

Emergency stop buttons



M12-3S



Tina 8A



E-sign 22.5

Connection accessories

Description	Type	Order code
Connection accessories		
M12 Y-connector for serial connection of device with StatusBus functionality.	M12-3S	2TLA020055R0600
M12 Y-connector for serial connection of devices without StatusBus functionality.	M12-3A	2TLA020055R0000
Connection block for the serial connection of up to 4 DYNlink devices with 12-5 connectors.	Tina 4A	2TLA020054R0300
Connection block for the serial connection of up to 8 DYNlink devices with 12-5 connectors.	Tina 8A	2TLA020054R0500
Adaptation unit for DYNlink solution with M20 fitting. For e.g. Compact.	Tina 2A*	2TLA020054R0100
Adaptation unit for DYNlink solution, internal assembly. For e.g. Compact.	Tina 2B*	2TLA020054R1100
Adaptation unit for DYNlink solution with M20 fitting and M12 connector. For e.g. connecting Compact to Pluto/Vital.	Tina 3A*	2TLA020054R0200
Termination for Smile 12	JST2	2TLA030051R1300
Accessories		
Emergency stop sign, yellow, no text, for INCA (22.5mm)	E-Sign 22.5	2TLA030054R0900
Emergency stop sign, yellow, no text, for Smile (32.5mm)	E-Sign 32.5	2TLA030054R1000
Yellow surround for Inca	Surround for Inca	2TLA030054R0400
Yellow shroud for Compact	CA1-8053	1SFA619920R8053
Stainless steel cable gland, for EStrong	Gland M20x1.5	2TLA050040R0002
Stainless steel conduit plug, for EStrong	Conduit Plug M20x1.5	2TLA050040R0004
LED Green/Red 230 VAC, for EStrong	LED 230	2TLA050211R0003

* For more information about Tina adapter units, please see Pluto and Vital chapters.



M12-C61



M12-C61HE

Cable with connectors

Connector	Female/male	Length	Special feature	Type	Order code
M12-5	Female	3 m		M12-C31	2TLA020056R0500
		6 m		M12-C61	2TLA020056R0000
			Harsh environment, halogen free	M12-C61HE	2TLA020056R8000
		10 m		M12-C101	2TLA020056R1000
			Harsh environment, halogen free	M12-C101HE	2TLA020056R8100
		20 m		M12-C201	2TLA020056R1400
	Female + male	0.3 m		M12-C0312	2TLA020056R5800
		0.06 m		M12-C00612	2TLA020056R6300
		1 m		M12-C112	2TLA020056R2000
		3 m		M12-C312	2TLA020056R2100
		6 m		M12-C612	2TLA020056R2200
		10 m		M12-C1012	2TLA020056R2300
			Angled female connector	M12-C1012V2	2TLA020056R6700
		16 m		M12-C1612	2TLA020056R5400
		20 m		M12-C2012	2TLA020056R2400
	Male	6 m		M12-C62	2TLA020056R0200
		10 m		M12-C102	2TLA020056R1200


2TLC172657F0201

M12-C01


2TLC010038F0201

C5 cable

—

Separate cables and connectors

Description	Type	Order code
Connectors		
M12-5 pole female, straight	M12-C01	2TLA020055R1000
M12-5 pole male, straight	M12-C02	2TLA020055R1100
Cable with 5 conductors		
10 m cable with 5 x 0.34 shielded conductors	C5 cable 10 m	2TLA020057R0001
50 m cable with 5 x 0.34 shielded conductors	C5 cable 50 m	2TLA020057R0005
100 m cable with 5 x 0.34 shielded conductors	C5 cable 100 m	2TLA020057R0010
200 m cable with 5 x 0.34 shielded conductors	C5 cable 200 m	2TLA020057R0020
500 m cable with 5 x 0.34 shielded conductors	C5 cable 500 m	2TLA020057R0050

Technical data

Emergency stop buttons

Technical data	
Approvals	
Smile, INCA	Inspecta
Smile Tina, INCA Tina	TÜV NORD
EStrong	
Compact	
Conformity	
Smile, INCA	CE 2006/42/EC – Machinery 2011/65/EU - RoHS EN ISO 12100:2010, EN ISO 13849-1:2008/AC:2009, EN 60204-1:2006+A1:2008, EN ISO 13850:2008
Smile Tina, INCA Tina	CE 2006/42/EC - Machinery 2004/108/EC - EMC EN ISO 12100:2010, EN ISO 13849-1:2008, EN 62061:2005, EN 60204-1:2006+A1:2009, IEC 60664-1:2007, EN 61000-6-2:2005, EN 61000-6-4:2007, EN 60947-5-5:2005, EN ISO 13850:2006
EStrong	CE 2006/42/EG – Machinery 2011/65/EU - RoHS EN ISO 12100:2010, EN ISO 13850:2015, EN 60204-1:2006:+A1:2009+AC:2010, EN 60947-5-5:1997:+A1:2017, EN 60947-5-1:2004:+A1:2009
Compact	CE 2006/42/EC - Machinery 2014/30/EU - EMC EN 60947-1:2007/A1:2011/A2:2014, EN 60947-5-1:2004/A1:2009, EN 60947-5-5:1997/A1:2005/A11:2013, EN ISO 13850:2008
Functional safety data	
EN 61508:2010	Up to SIL3, depending on system architecture
EN 62061:2005	Up to SILCL3, depending on system architecture
EN ISO 13849-1:2008	Up to Cat. 4, PL e, depending on system architecture
Smile, INCA	$B10_d$ = 100 000
Smile Tina, INCA Tina	$PFH_D = 4.66 \times 10^{-9}$
EStrong	$B10_d$ = 1 500 000
Compact	$B10_d$ = 250 000

Technical data

Emergency stop buttons

Technical data	
Electrical data	
Operating voltage	
Smile, INCA	17-27 VDC ± 10%
Smile Tina, INCA Tina	+24 VDC +15% -25%
EStrong	230 VAC / +24 VDC (the LED is +24 VDC originally, but can be replaced with a 230 VAC accessory)
Compact	230 VAC / +24 VDC
Mechanical data	
Mechanical life	>50 000 operations
Operating temperature	
Smile, INCA	-10…+55 °C
EStrong	-25…+80 °C
Compact	-25…+70 °C
Protection class	
Smile, INCA	IP65
EStrong	IP67, IP69K
Compact	IP66, IP67, IP69K
Weight	
Smile	65 g
INCA	45 g
EStrong	820 g
Compact	108 g, 124 g (with shroud)
Material	
Smile	Polyamide PA66, Macromelt, polybutylenterephthalate PBT, Polypropene PP, UL 94 V0
INCA	Polyamide PA66, Macromelt, polybutylenterephthalate PBT, Polypropene PP, UL 94 V0
EStrong	Stainless steel 316 housing
Compact	Polycarbonate

More information

Fore more information, e.g. the complete technical information, see product manual for:
Smile 2TLC172097M0201
INCA 2TLC172163M0201
EStrong 2TLC172247M0201
Compact 1SFC151005C0201

Connection diagrams

For connection diagrams of emergency stop buttons please see https://library.abb.com/

Dimension drawings

Emergency stop buttons

Smile

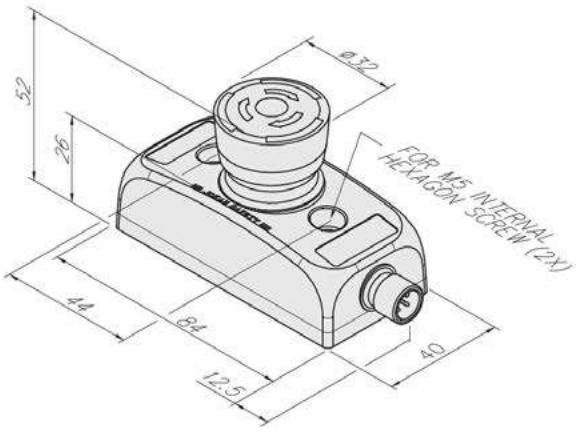

INCA

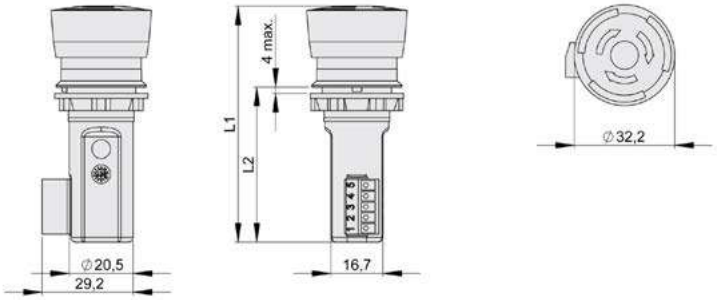

Type	L1 mm	L2 mm
INCA 1 EC Tina	75.5	49.5 ± 0.5
INCA 1	80	54 ± 0.5
INCA 1 Tina	80	54 ± 0.5

EStrong

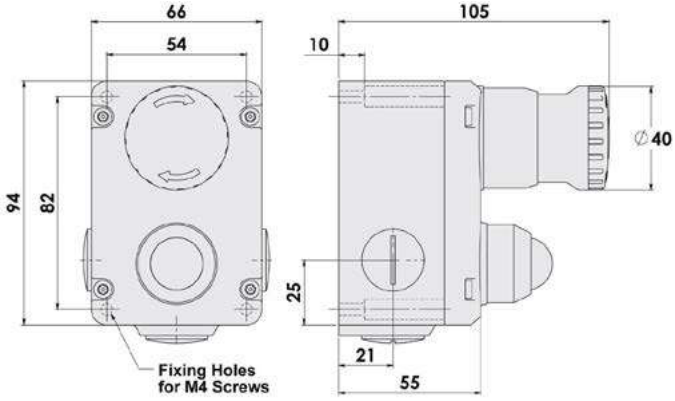

Compact (housing only)

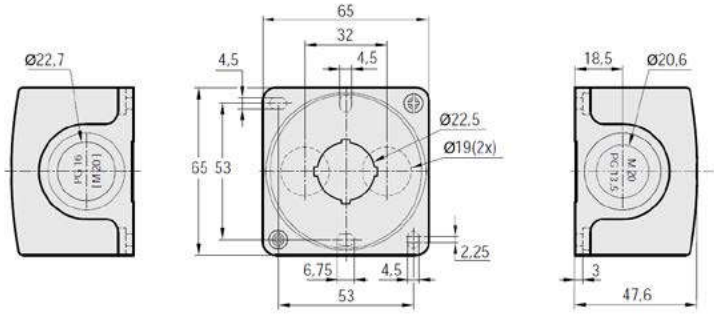

All dimensions in mm

Safety stop buttons
Smile, INCA and Compact

Safety stop buttons are used to safely stop a certain part of a dangerous machine.

ABB offers safety stop buttons to suit different needs of connection and communication. Models are available for e.g. external mounting or panel mounting, in compact size or robust design, adapted for the DYNlink solution or with 2 NC contacts.



Easy to install

Compact size
Models with a compact and appealing housing saves space and makes it easy to place.

Quick installation
Quick and easy installation of models with features such as centered mounting holes, removable terminal blocks and M12 connectors.

Serial connection
Tina models save cable length and installation time with serial connection.

Optimum interface

Highly adaptable
Several models to choose between depending on position, installation and function.

Reliable in extreme conditions
Robust models for use in demanding environments.

Continuous operation

LED diagnostics
Models with integrated LED diagnostics reduce downtime when troubleshooting.

Applications and features

Safety stop buttons

Applications

A safety stop (also called machine stop) can be used to safely stop a part of the machine, e.g. as a stop for an individual hazardous machine function. It may not be used as an emergency stop and stop the complete machine or production line. Likewise, an emergency stop with red push button should not be used as a safety stop. In order to separate the safety stop function from the emergency stop function, the safety stop buttons should be colored black.



Features

DYNlink
Safety stop buttons with Tina in their name belong to the DYNlink solution, which enables serial connection using only one channel and still reaching Cat. 4/PL e. DYNlink devices must be used with Vital safety controller or Pluto programmable safety controller. Up to 30 DYNlink devices can be connected in series to Vital and up to 10 can be connected to each input on Pluto.

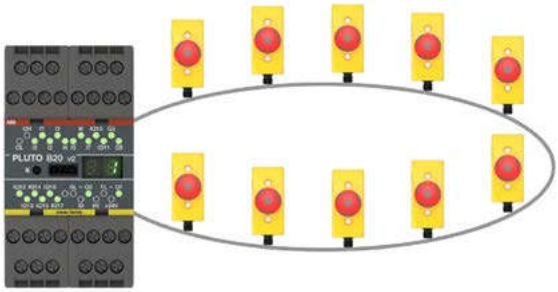

Models

Safety stop buttons

Safety stop buttons for external mounting

Smile
Smile is a small and easy to install safety stop button. Its size allows mounting in reduced spaces, and its centered mounting holes makes it especially easy to mount on aluminum extrusions (e.g. Quick-Guard fencing system).

Smile has an integrated LED in the button that shows the status and simplifies error tracking.

The standard model of Smile has 2 contacts and can be used with safety controllers from all brands. The Smile Tina model belongs to the ABB DYNlink solution, with the advantages of serial connection using only one channel and still reaching Cat. 4/PL e.

Smile safety stops are identical to the corresponding Smile emergency stops apart from the color of the button.



Compact
The Compact safety stop button offers a robust enclosure with a high IP rating that fulfills the demands in severe and humid environments, such as food and beverage industry. Compact can be fitted with a Tina adapter for use in a DYNlink solution (Tina 2A, Tina 2B or Tina 3A).

Compact safety stop is identical to Compact emergency stop apart from the color of the button.



Safety stops for panel mounting

INCA
INCA is a safety stop button for panel mounting, designed for installation in 22.5 mm holes. Its removable terminal block facilitates connection and exchange.

INCA has an integrated LED in the button that shows the status and simplifies error tracking.

The standard model of INCA has 2 contacts and can be used with safety controllers from all brands. INCA Tina belongs to the ABB DYNlink solution, with the advantages of serial connection using only one channel and still reaching Cat. 4/PL e.

INCA safety stop is identical to INCA emergency stop apart from the color of the button.



Ordering information

Safety stop buttons



2TLC172198F0201

Smile 11 SA Tina



CEP1-1002


2TLC172365F0201

INCA 1S

Safety stop buttons

Mounting	Type of safety signal	Connection type	Feature	Type	Order code
External	DYNlink	1 m cable from bottom	Status LED	Smile 11 SA Tina	2TLA030050R0500
	2 NC	1 x M12-5	Status LED	Smile 11 SA	2TLA030051R0900
	1 NO + 1 NC*	2 x M20 conduits	-	CEP1-1002 (Compact)	1SFA619811R1002
			With shroud	CEP1-2002 (Compact)	1SFA619811R2002
Panel	DYNlink	5 pole terminal block	Status LED	INCA 1S Tina	2TLA030054R0200
	2 NC	5 pole terminal block	Status LED	INCA 1S	2TLA030054R0300

* Can be adapted to DYNlink with Tina


2TLC172471F0201

Tina 8A

Accessories

Description	Type	Order code
M12 Y-connector for serial connection of devices without StatusBus functionality.	M12-3A	2TLA020055R0000
Connection block for the serial connection of up to 4 DYNlink devices with 12-5 connectors.	Tina 4A	2TLA020054R0300
Connection block for the serial connection of up to 8 DYNlink devices with 12-5 connectors.	Tina 8A	2TLA020054R0500
Grey shroud for Compact	CA1-8054	1SFA619920R8054
Adaptation unit for DYNlink solution with M20 fitting. For e.g. Compact.	Tina 2A *	2TLA020054R0100
Adaptation unit for DYNlink solution, internal assembly. For e.g. Compact.	Tina 2B *	2TLA020054R1100
Adaptation unit for DYNlink solution with M20 fitting and M12 connector. For e.g. connecting Compact to Pluto/Vital.	Tina 3A *	2TLA020054R0200

* For more information about Tina adapter units, please see Pluto and Vital chapters.

Cable and connectors

Safety stop buttons



2TLC172951F0201

M12-C61



2TLC010003F0201

M12-C61HE

Cable with connectors

Connector	Female/male	Length	Special feature	Type	Order code
M12-5	Female	3 m		M12-C31	2TLA020056R0500
		6 m		M12-C61	2TLA020056R0000
			Harsh environment, halogen free	M12-C61HE	2TLA020056R8000
		10 m		M12-C101	2TLA020056R1000
			Harsh environment, halogen free	M12-C101HE	2TLA020056R8100
		20 m		M12-C201	2TLA020056R1400
	Female + male	0.3 m		M12-C0312	2TLA020056R5800
		0.06 m		M12-C00612	2TLA020056R6300
		1 m		M12-C112	2TLA020056R2000
		3 m		M12-C312	2TLA020056R2100
		6 m		M12-C612	2TLA020056R2200
		10 m		M12-C1012	2TLA020056R2300
			Angled female connector	M12-C1012V2	2TLA020056R6700
		16 m		M12-C1612	2TLA020056R5400
		20 m		M12-C2012	2TLA020056R2400
	Male	6 m		M12-C62	2TLA020056R0200
		10 m		M12-C102	2TLA020056R1200



2TLC172657F0201

M12-C01



2TLC010038F0201

C5 cable

Separate cables and connectors

Description	Type	Order code
Connectors		
M12-5 pole female, straight	M12-C01	2TLA020055R1000
M12-5 pole male, straight	M12-C02	2TLA020055R1100
Cable with 5 conductors		
10 m cable with 5 x 0.34 shielded conductors	C5 cable 10 m	2TLA020057R0001
50 m cable with 5 x 0.34 shielded conductors	C5 cable 50 m	2TLA020057R0005
100 m cable with 5 x 0.34 shielded conductors	C5 cable 100 m	2TLA020057R0010
200 m cable with 5 x 0.34 shielded conductors	C5 cable 200 m	2TLA020057R0020
500 m cable with 5 x 0.34 shielded conductors	C5 cable 500 m	2TLA020057R0050

Technical data

Safety stop buttons

Technical data	
Approvals	
Smile, INCA	
Smile Tina, INCA Tina	TÜV NORD
Compact	
Conformity	
Smile, INCA	CE 2006/42/EC – Machinery 2011/65/EU - RoHS EN ISO 12100:2010, EN ISO 13849-1:2008/AC:2009, EN 60204-1:2006+A1:2008, EN ISO 13850:2008
Smile Tina, INCA Tina	CE 2006/42/EC - Machinery 2004/108/EC - EMC EN ISO 12100:2010, EN ISO 13849-1:2008, EN 62061:2005, EN 60204-1:2006+A1:2009, IEC 60664-1:2007, EN 61000-6-2:2005, EN 61000-6-4:2007, EN 60947-5-5:2005, EN ISO 13850:2006
Compact	CE 2006/42/EC - Machinery 2014/30/EU - EMC EN 60947-1:2007/A1:2011/A2:2014, EN 60947-5-1:2004/A1:2009, EN 60947-5-5:1997/A1:2005/A11:2013, EN ISO 13850:2008
Functional safety data	
EN 61508:2010	Up to SIL3, depending on system architecture
EN 62061:2005	Up to SILCL3, depending on system architecture
EN ISO 13849-1:2008	Up to Cat. 4, PL e, depending on system architecture
Smile, INCA	$B10_d$ = 100 000
Smile Tina, INCA Tina	$PFH_D = 4.66 \times 10^{-9}$
Compact	$B10_d$ = 50 000
Electrical data	
Operating voltage	
Smile, INCA	17-27 VDC ± 10%
Smile Tina, INCA Tina	+24 VDC +15% -25%
Compact	230 VAC / +24 VDC
Mechanical data	
Mechanical life	>50 000 operations
Operating temperature	
Smile, INCA	-10...+55 °C
Compact	-25...+70 °C
Protection class	
Smile, INCA	IP65
Compact	IP66, IP67, IP69K
Weight	
Smile	65 g
INCA	45 g
Compact	108 g, 124 g (with shroud)
Material	
Smile	Polyamide PA66, Macromelt, polybutylenterephthalate PBT, Polypropene PP, UL 94 V0
INCA	Polyamide PA66, Macromelt, polybutylenterephthalate PBT, Polypropene PP, UL 94 V0
Compact	Polycarbonate

More information

Fore more information, e.g. the complete technical information, see product manual for:
Smile 2TLC172097M0201
INCA 2TLC172163M0201
Compact 1SFC151005C0201

Dimension drawings

Safety stop buttons

Smile

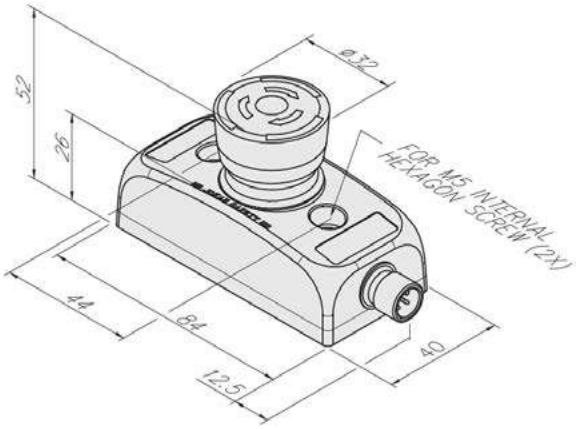

INCA

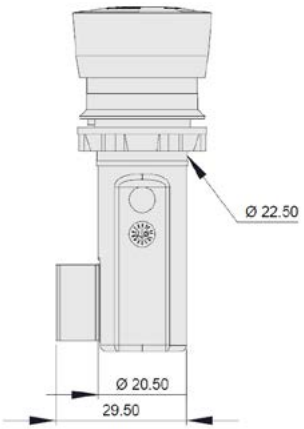

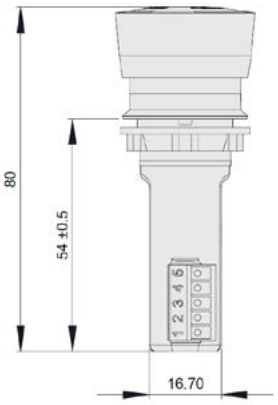

Compact (housing only)

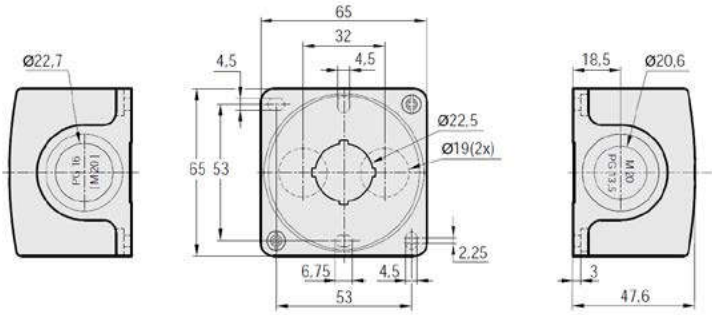

All dimensions in mm

Pull wire emergency stop switch
LineStrong

LineStrong is a pull wire emergency stop switch, used for easy reach of the emergency stop function along machines and sections of conveyors.

A pull wire emergency stop switch allows to initiate the emergency stop command from any point along the installed wire length by pulling the wire. It replaces a series of emergency stop buttons and is easier to install.

LineStrong is also available in different models for different lengths of wires, with different housing material as well as an explosion proof version.



Easy to install

Quick installation
A pull wire emergency stop switch is easier to install than a system of several emergency stop buttons along a carriage path.

Highly adaptable
Several models to choose between gives a variety of mounting possibilities and features.

Long wire length
Can handle wires up to 200 m on a single switch.

Safety and protection

Easily accessible
Easy reach of the emergency stop function along machines, conveyors and processes.

High level of safety
The positive forced disconnect contacts provide a high level of safety and are double switching, i.e. triggers emergency stop in both directions of the wire.

Continuous operation

Reliable in extreme conditions
Robust construction makes LineStrong ideal for use in demanding environments.

LED diagnostics
Integrated LED diagnostics ensures status can be seen easily from a distance.

Applications
LineStrong

Instead of multiple emergency stops
A pull wire emergency stop switch is often placed along conveyor belts or carriage paths where access to the stop function must be possible along the whole line. It is often easier to install a pull wire emergency stop switch than to place multiple emergency stop buttons if the distance is longer.

LineStrong can handle wires up to 200 m on one single switch and since the emergency stop command can be initiated from any point along the wire, this gives better access to the emergency stop function than using emergency stop buttons.



As protective device in low risk applications
LineStrong can be used as protection, for example along conveyors with low risks where the wire can be installed at waist height in front of the conveyor, which provides an emergency stop if someone walks or falls towards the conveyor, hence pulling the wire.

One, two or several switches
The maximum length of the wire attached to LineStrong depends on if there is a LineStrong unit attached to both ends of the wire or if one end is attached to a wall/fixed object. In the image below LineStrong2 is used as an example.

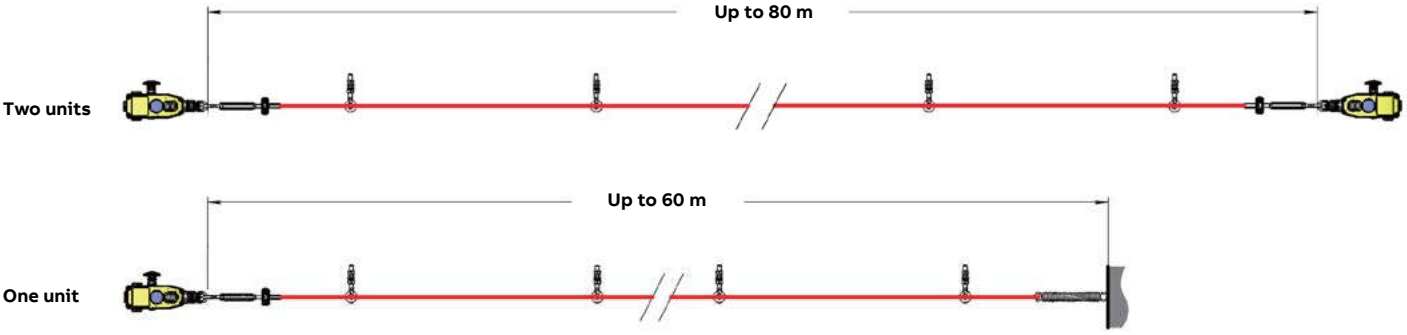

Features
LineStrong

Positive forced disconnected contacts
The contacts in LineStrong are positive force disconnected, which ensures that the contacts will not be held in a normally closed position due to a failure of the spring mechanism or the welding/sticking of the contacts.

Reset button
All models of LineStrong have an integrated reset button that needs to be pressed in order to reset the emergency stop if the emergency stop function has been triggered.

Emergency stop button
Most LineStrong models have an integrated emergency stop button on the housing of the switch. Since the first half meter of the wire is not intended to pull in order to trigger the emergency stop function, the integrated emergency stop button provides quick and simple access to the emergency stop function if you are standing right in front of LineStrong. The emergency stop button of LineStrong 2 can be moved to either side of LineStrong to enable best access depending on position and height of LineStrong.

Integrated LED
LineStrong2 and LineStrong3 have an integrated 2-color LED that shows if the emergency stop function has been triggered or not. The LED is also available as spare part.

Material
LineStrong is available with a housing in yellow die cast aluminum alloy or with a housing in stainless steel 316 which is recommended for severe applications in e.g. the food processing and the chemical industries.

Left hand, right hand or both sides
LineStrong1 and LineStrong2 can be mounted in any direction. Linestrong3 is available in different models depending on installation. L (left hand) should be used if the placement of the grab wire switch is to the left in the installation. R (right hand) should be used if the grab wire switch is to the right in the installation. D (double wire) has wire entries from both sides of the grab wire switch.

Wire breakage monitoring
The contacts are double switching which means that the emergency stop command is given both when someone pulls the wire and if the wire should break.

Indication of wire tension
All models are equipped with an indicator of the tension of the wire which simplifies installation and adjustment.

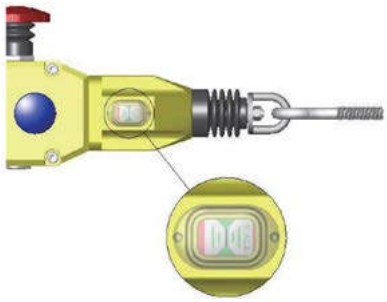

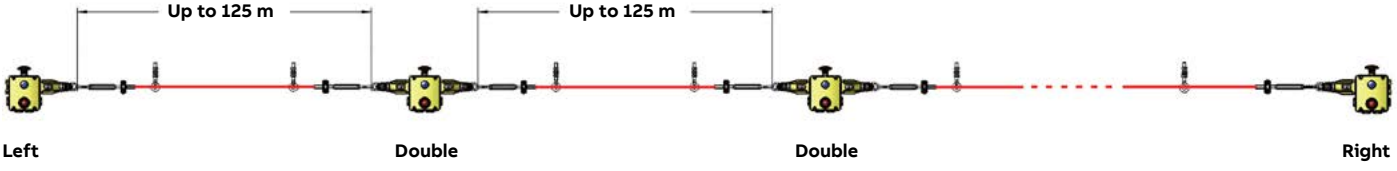

Features

LineStrong

Easier installation with tensioner/gripper

The tensioner/gripper accessory significantly reduces the installation time. Traditional grab wire systems normally need turnbuckle and clamps, which are difficult to tension and adjust, and normally require frequent re-tensioning. The tensioner gripper integrates an eyehook, a tensioner thimble and a wire strength gripper in one assembly which enables rapid connection to the switch eyebolts and fast and accurate tensioning of the wire.

Thanks to the switch tension indicator, it is easy to adjust the system accurately and quickly. The double clamp mechanism prevents wire slippage and significantly reduces machine downtime which can occur which traditional turnbuckle systems.

For systems longer than 50 m, the tensioner/gripper is necessary on both sides.

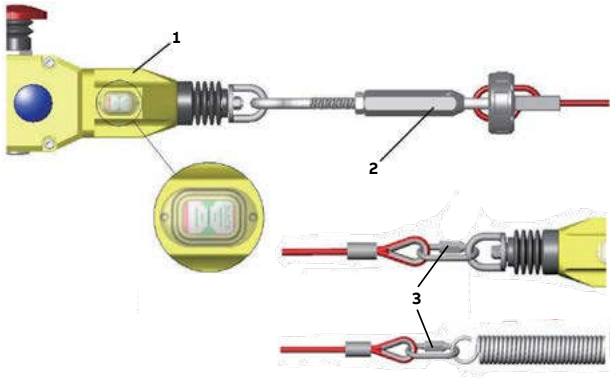

1. Tension to mid position as indicated by the green arrows in the viwing window of each switch
2. The tensioner thimble allows immediate accurate and final tensioning of the wire, whilst viewing the tension marker through the viewing window on the switch.
3. Quick Link termination.

Quick-link termination

A quick-link termination is available as an accessory in the wire pull kit, for easy connection to the safety spring or the switch eyebolt for systems up to 50 m.

Mounting accessories

The wire pull kits contains the suitable accessories for the included wire length.
- When using one switch, the wire must be anchored at the other end using a safety spring.
- The first eyeball support must be placed no more than 500 mm from the switch eyebolt or safety spring.
- The part of the wire from the wire end to the first eyebolt support shall not be used as part of the active protection coverage.
- Wire support eyebolts must be fitted at 2.5 - 3 meters intervals along the complete wire length.
- The tensioner/gripper is used to adjust the correct tension

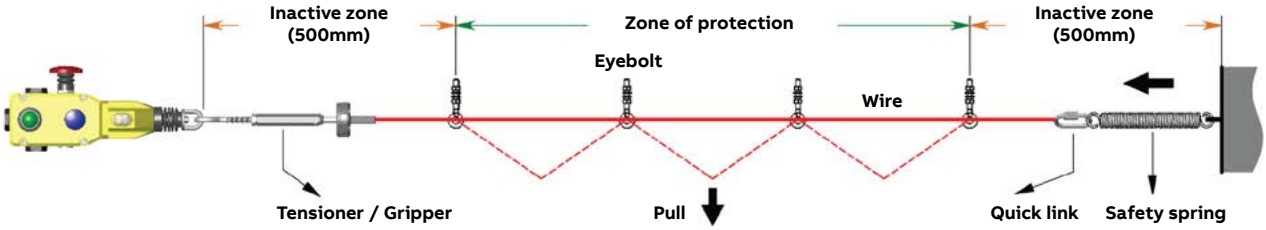

Corner pulley

A corner pulley can be used to navigate inside or outside corners without causing damage to the wire. They are in stainless steel and can be rigidly mounted.
When using a safety spring, a maximum of one corner pulley may be used, to ensure that the complete length of the wire is visible from either the switch or the spring anchorage.

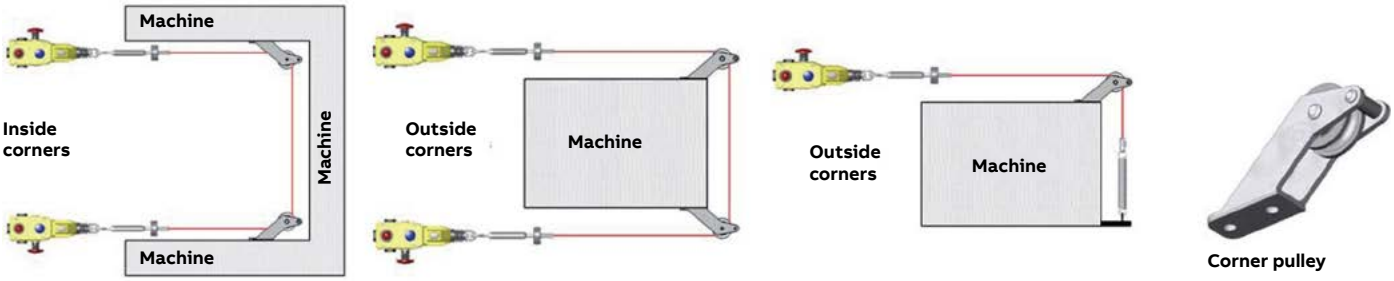

Examples of using the corner pulley

Ordering information

LineStrong



LineStrong1



LineStrong2



LineStrong2Z



LineStrong3R



LineStrong3L



LineStrong3D

LineStrong

IP rating	Material	E-stop button	Contacts	Max. wire length (m)		Feature	Type	Order code
				1 unit	2 units			
IP67	Yellow die cast aluminum alloy	No	2 NO + 2 NC	30	50	-	LineStrong1	2TLA050200R0030
		Yes	2 NO + 2 NC	60	80	-	LineStrong2	2TLA050202R0332
			2 NO + 4 NC	100	125	Left hand	LineStrong3L	2TLA050206R0332
						Right hand	LineStrong3R	2TLA050208R0332
				200	325	Both sides	LineStrong3D	2TLA050204R0332
IP67, IP69K	Stainless steel 316	Yes	2 NO + 2 NC	80	100	-	LineStrong2Z	2TLA050202R0322
			2 NO + 4 NC	100	125	Left hand	LineStrong3LZ	2TLA050206R0322
						Right hand	LineStrong3RZ	2TLA050208R0322
				200	325	Both sides	LineStrong3DZ	2TLA050204R0322

Accessories
LineStrong


2TLC172577F0201

Wire pull kit


2TLC172220F0201

Wire tensioner


2TLC172581F0201

Corner pulley


2TLC172219F0201

Eyebolt


2TLC172221F0201

Safety spring


2TLC172215F0201

LineStrong Screwdriver


2TLC172217F0201

Gland


2TLC172218F0201

Conduit plug


2TLC172902F0201

LineStrong LED 230

Mounting Accessories

Description	Material	Length	Type	Order code
Wire pull kit including wire, eyebolts, tensioner/gripper, quick-link termination and Allen key in right quantity for the included wire length.	Galvanized	10 m wire	10 m wire kit, gal	2TLA050210R0130
		20 m wire	20 m wire kit, gal	2TLA050210R0330
		80 m wire	80 m wire kit, gal	2TLA050210R0630
		100 m wire	100 m wire kit, gal	2TLA050210R0730
	Stainless steel	50 m wire	50 m wire kit, SS	2TLA050210R0520
		100 m wire	100 m wire kit, SS	2TLA050210R0720
Wire tensioner/gripper	Galvanized		Wire tensioner, gal	2TLA050210R4030
	Stainless steel		Wire tensioner, SS	2TLA050210R4020
Corner pulley	Galvanized		Corner pulley, gal	2TLA050210R6030
	Stainless steel		Corner pulley, SS	2TLA050210R6020
Eyebolt M8 x 1.25 8 pcs	Galvanized		Eyebolt M8x1.25, gal	2TLA050210R8030
	Stainless steel		Eyebolt M8x1.25, SS	2TLA050210R8020
Safety spring, 220mm	Stainless steel		Spring 220 mm, SS	2TLA050211R0004

Other accessories

Description	Type	Order code
Screwdriver, anti-tamper, Torx T20	Screwdriver T20	2TLA050211R0006
Gland M20 x 1.5	Gland M20x1.5	2TLA050040R0002
Conduit plug M20 x 1.5	Cond.Plug M20x1.5	2TLA050040R0004

Spare parts

Description	Type	Order code
LineStrong LED Green/Red +24 VDC	LineStrong LED 24	2TLA050211R0001
LineStrong LED Green/Red 230 VAC	LineStrong LED 230	2TLA050211R0003
LineStrong2 and LineStrong3 Emergency stop button.	LineStrong E-Stop	2TLA050211R0005

Cables
LineStrong



M12-C01



C5 cable

LineStrong

Description	Type	Order code
Connectors		
M12-5 pole female, straight	M12-C01	2TLA020055R1000
M12-5 pole male, straight	M12-C02	2TLA020055R1100
M12-8 pole female, straight	M12-C03	2TLA020055R1600
M12-8 pole male, straight	M12-C04	2TLA020055R1700
Cable with 5 conductors		
10 m cable with 5 x 0.34 shielded conductors	C5 cable 10 m	2TLA020057R0001
50 m cable with 5 x 0.34 shielded conductors	C5 cable 50 m	2TLA020057R0005
100 m cable with 5 x 0.34 shielded conductors	C5 cable 100 m	2TLA020057R0010
200 m cable with 5 x 0.34 shielded conductors	C5 cable 200 m	2TLA020057R0020
500 m cable with 5 x 0.34 shielded conductors	C5 cable 500 m	2TLA020057R0050
Cable with 8 conductors		
50 m cable with 8 x 0.34 shielded conductors	C8 cable 50 m	2TLA020057R1005
100 m cable with 8 x 0.34 shielded conductors	C8 cable 100 m	2TLA020057R1010
200 m cable with 8 x 0.34 shielded conductors	C8 cable 200 m	2TLA020057R1020
500 m cable with 8 x 0.34 shielded conductors	C8 cable 500 m	2TLA020057R1050

Technical data
LineStrong

Technical data

Approvals	
LineStrong	
Conformity	CE
LineStrong	2006/42/EC - Machinery EN ISO 12100:2010, EN ISO 13850:2008, EN 60204-1:2006+A1:2009, EN 60947-1:2007+A1:2011, EN 60947-5-1:2004+A1:2009, EN 60947-5-5:1997+A1:2005
Functional safety data	
EN ISO 13849-1:2008	Up to Cat. 4, PL e, depending on system architecture.
EN/IEC 62061:2005	Up to SILCL3, depending on system architecture.
IEC 61508	Up to SIL3, depending on system architecture.
$B10_d$	1 500 000
Electrical data	
Utilization category	240 VAC / 3 A
	+24 VDC / 2.5 A
LED	+24 VDC
Mechanical data	
Operating temperature	-25...+80 °C
Protection class	
LineStrong1, LineStrong2, LineStrong3	IP67
LineStrong2Z, LineStrong3Z	IP66, IP67, IP69K
Weight	
LineStrong1	675 g
LineStrong2	880 g
LineStrong2Z	1635 g
LineStrong3L/R	1100 g
LineStrong3LZ/RZ	2000 g
LineStrong3D	1320 g
LineStrong3DZ	2200 g
Material	
LineStrong1, LineStrong2, LineStrong3D/L/R	Die cast painted yellow
LineStrong2Z, LineStrong3LZ/RZ/DZ	Stainless steel 316
Wire type	PVC sheath steel wire 4.0 mm outside diameter
Conduit entries	
LineStrong1/2	3 x M20 x 1.5
LineStrong3	4 x M20 x 1.5

More information
Fore more information, e.g. the complete technical information, see product manual for:
LineStrong 2TLC172248M0201

Dimension drawings

LineStrong

LineStrong1

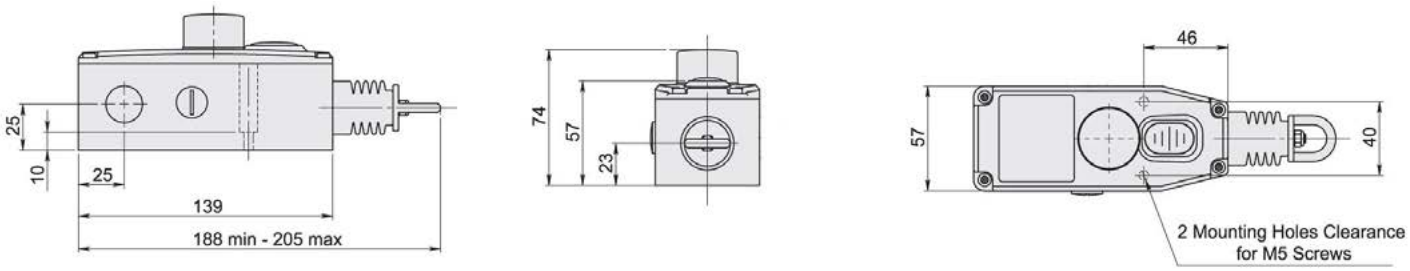

LineStrong2

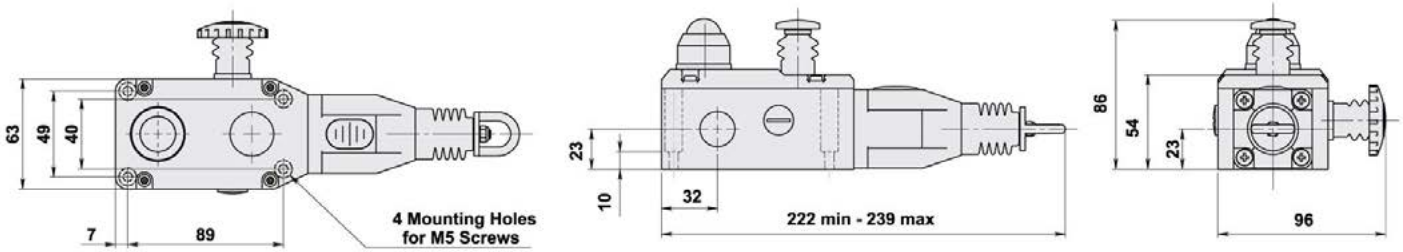

LIneStrong3L-R

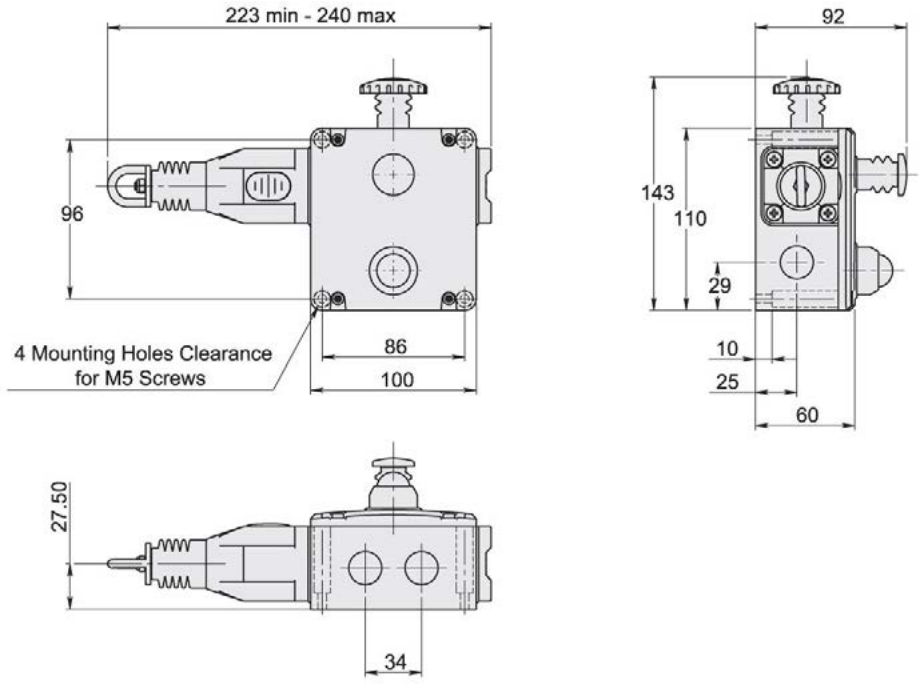

All dimensions in mm

Push-button box
Smile 41

Smile 41 is a push-button box that gathers push buttons and an emergency stop button in a single compact device with only one M12 connector for all functions.

Smile 41 push-button box is intended for use with Pluto programmable safety controller.

A kit of colored filters is supplied and the color of each button can be chosen after delivery and changed later.



Easy to install

Easy to attach to profiles
The centered mounting holes makes Smile 41 easy to attach to e.g. aluminum extrusions profiles like QuickGuard.

Quick installation
The four buttons are connected with only one M12 connector which speeds up the connection. A maximum of 8 wires need to be connected for the complete push-button box with LEDs.

Space saving

Compact housing
A compact and appealing housing saves space and makes it easy to place.

Optimum interface

LED indication
All push-buttons and emergency stop buttons are illuminated. The lighting of the push-buttons can easily be managed by the Pluto programmable safety controller, allowing a greater adaptation to the needs.

Several button colors
The color of each button can be chosen after delivery and changed later.

Applications and features
Smile 41

Applications

Smile 41 is a convenient way to gather several buttons at the same place while reducing cabling and installation. For example, an emergency stop button, a push button used to request the unlocking of the door, a push button used as reset button, and a push button used as start button.



Features

With Pluto programmable safety controller
Smile 41 has been developed for use with Pluto programmable safety controller and allow to get all the advantages of the Pluto “light-button function”: only one I/O (IQ) is necessary for both a push-button and its LEDs and the lighting of the reset buttons can be handled by Pluto without any extra programming.

The emergency stop button satisfies the highest level of safety, and although only one cable is used for the signals of the four buttons, a possible short-circuit can be detected by Pluto and the highest level of safety can be reached.

Kit of colored filters
A kit of colored filters is supplied with all models and the color of each push button can be chosen after delivery and changed later.



Centered mounting holes
Centered mounting holes facilitate the mounting of Smile 41 on aluminum profiles like Quick-Guard.

Ordering information

Smile 41



2TLC172717F0201

Smile 41 EWWWP

Smile 41 push button box

Smile 41 push-button box is delivered with a kit of filters					
Safety controller	**Emergency stop button**	**Other buttons**	**Connector**	**Type**	**Order code**
Pluto programmable safety controller	1	3 push-buttons	M12-8 male	Smile 41 EWWWP	2TLA030057R0100

Spare parts

Description	**Type**	**Order code**
Kit of colored filters	Colored filters	2TLA030059R2600

Cables and connectors

Smile 41



M12-C63



M12-C334

Cable with connectors

Connector	Female/male	Length	Type	Order code
M12-8	Female	3 m	M12-C33	2TLA020056R2900
		6 m	M12-C63	2TLA020056R3000
		10 m	M12-C103	2TLA020056R4000
		20 m	M12-C203	2TLA020056R4100
	Female + male	0.06 m	M12-C00634	2TLA020056R6400
		1 m	M12-C134	2TLA020056R5000
		3 m	M12-C334	2TLA020056R5100



M12-C03



C8 cable

Separate cables and connectors

Description	Type	Order code
M12-8 connectors		
M12-8 pole female, straight	M12-C03	2TLA020055R1600
M12-8 pole male, straight	M12-C04	2TLA020055R1700
Cable with 8 conductors		
50 m cable with 8 x 0.34 shielded conductors	C8 cable 50 m	2TLA020057R1005
100 m cable with 8 x 0.34 shielded conductors	C8 cable 100 m	2TLA020057R1010
200 m cable with 8 x 0.34 shielded conductors	C8 cable 200 m	2TLA020057R1020
500 m cable with 8 x 0.34 shielded conductors	C8 cable 500 m	2TLA020057R1050

Technical data

Smile 41

Technical data

	Smile 41
Approvals	TÜV NORD
Conformity	CE 2006/42/EC - Machinery 2014/30/EU - EMC 2011/65/EU - RoHS EN ISO 12100:2010, EN ISO 13849-1:2008/AC:2009 62061:2005+A2:2015, EN 60204-1:2006+A1:2009, IEC 60664-1:2007, EN 61000-6-2:2005, EN 61000-6-4:2011, EN ISO 13850:2015
Functional safety data	
IEC 61508:2010	Up to SIL3, depending on system architecture
EN/IEC 62061:2005	Up to SILCL3, depending on system architecture
EN ISO 13849-1:2008	Up to Cat. 4/PL e, depending on system architecture
$B10_d$	65 000
Electrical data	
Operating voltage	+24 VDC ± 15%
Mechanical data	
Mechanical life	
Emergency stop button	> 50 000 operations
Illuminated push button	1 000 000 operations
Operating temperature	-25... +50 °C
Protection class	IP65
Weight	190 g

More information

Fore more information, e.g. the complete technical information, see product manual for:
Smile 41 2TLC172280M0201

Dimension drawings

Smile 41

Smile 41

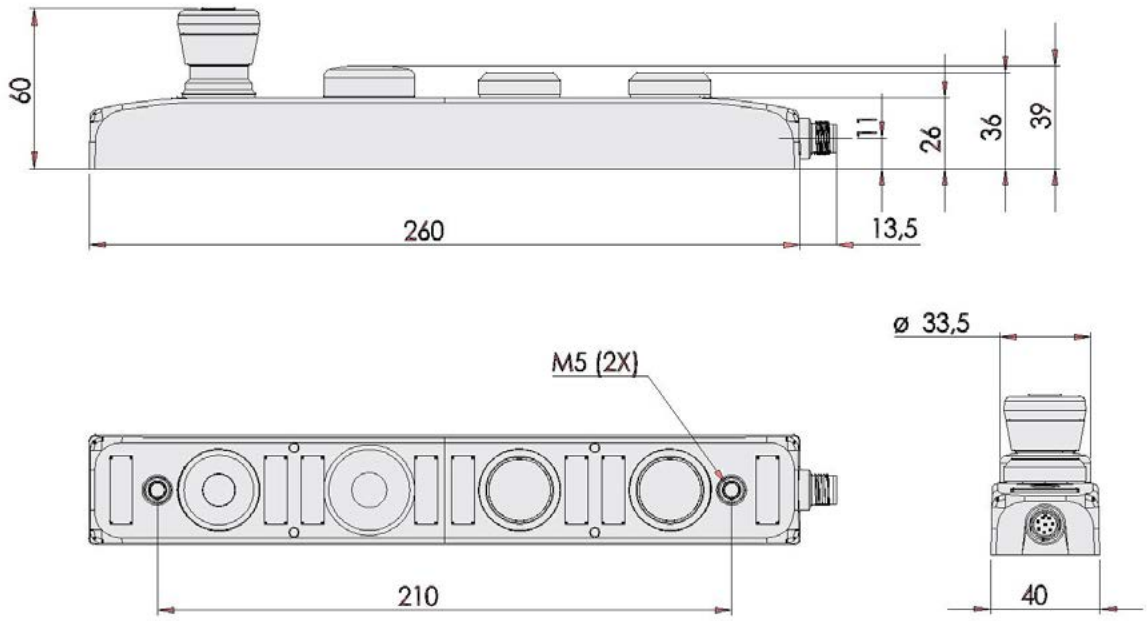

All dimensions in mm

Reset button
Smile

Smile reset buttons have compact housings with M12 connectors for easy connection.

The reset button contains an integrated white LED, and all buttons are delivered with a kit of colored filters to snap on the top of the button. In this way the color of the button can be chosen after delivery and is also possible to changed later.

The different models also allow a choice of:
- local reset connected directly to the sensor, or
- global reset connected to the safety control module.



Easy to install

Easy to attach to profiles
The centered mounting holes make Smile easy to attach to e.g. aluminum extrusions profiles.

Speed up installationn
The housing requires no assembly and the M12 connectors speed up installation and reduce the risk of connection error.

Local reset
Local reset allows to have the reset button close to the safety device while reducing cabling.

Space saving

Compact housing
A compact and appealing housing saves space and makes it easy to place.

Optimum interface

Several button colors
All reset buttons are illuminated with a white LED and the color of each button can be chosen after delivery and changed later using colored snap-on filters.

Ordering information

Smile reset buttons



2TLC172018V0201

Smile 11 RO1

Ordering details

Type of contact	Intended use	Connectors	Type	Order code
1 NO	Most reset applications	M12-5 male	Smile 11 RA	2TLA030053R0000
1 NO	Pluto Safety PLC light button function*	M12-5 male	Smile 11 RB	2TLA030053R0100
1 NO	Local reset of Orion1 Base	M12-5 male	Smile 11RO1	2TLA022316R3000
1 NC	Local reset of Orion2 Base and Extended, and Orion3 Extended	M12-5 male	Smile 11RO2	2TLA022316R3100
1 NC	Local reset of Orion3 Base	M12-5 male	Smile 11RO3	2TLA022316R3200
1 NO	Local reset of Eden DYN-Reset M12-5 and Eden OSSD-Reset M12-5	M12-5 male + female	Smile 12 RF	2TLA030053R2600
1 NO	Local reset of Eden OSSD-Reset M12-8	M12-8 male + female	Smile 12 RG	2TLA030053R2700

* See Pluto hardware manual for more information about the light button function



2TLC172623F0201

M12-3x



2TLC172475F0201

Tina 10B

Accessories

Description	Type	Order code
Y-connector for series connection of DYNlink devices with M12-5 connectors, e.g. Eden.	M12-3A	2TLA020055R0000
Y-connector for series connection of Adam OSSD M12-8 with M12-5 cables	M12-3H	2TLA020055R0800
Y-connector for series connection of Adam OSSD M12-8 with M12-8 cables	M12-3G	2TLA020055R0700
Y-connector for connection of Smile reset button to Orion.	M12-3R	2TLA022316R0000
Adaptation unit of OSSD outputs to DYNlink signals for use with Vital control module or Pluto Safety PLC. Tina 10B has an extra M12 connector for connection of a reset button.	Tina 10B v2	2TLA020054R1310



2TLC172725F0201

Colored filters

Spare parts

Description	Type	Order code
Kit of colored filters (yellow, green, white, blue, red)	Colored filters	2TLA030059R2600

Cables

Smile reset buttons

Cables for Smile 12 RF (with Eden DYN/OSSD Reset M12-5)

Description	Female/male	Length	Type	Order code	Eden Reset M12-5 to Smile 12 RF	Smile 12 RF to M12-3A	M12-3A to M12 3A	El-cabinet to M12-3A	M12-3A to el-cabinet
M12-5	Female	6 m	M12-C61	2TLA020056R0000				•	
		10 m	M12-C101	2TLA020056R1000				•	
		20 m	M12-C201	2TLA020056R1400				•	
	Female + male	1 m	M12-C112	2TLA020056R2000	•	•	•		
		3 m	M12-C312	2TLA020056R2100	•	•	•		
		6 m	M12-C612	2TLA020056R2200	•	•	•		
		10 m	M12-C1012	2TLA020056R2300	•	•	•		
		20 m	M12-C2012	2TLA020056R2400	•	•	•		
	Male	6 m	M12-C62	2TLA020056R0200					•
		10 m	M12-C102	2TLA020056R1200					•

Cables for Smile 12 RG (with Eden DYN/OSSD Reset M12-8)

Connector	Female/male	Length	Type	Order code	Eden Reset M12-8 to Smile 12 RG	Smile 12 RG to M12-3G or M12-3H	M12-3G to M12-3G	El-cabinet to M12-3G	M12-3G to el-cabinet	M12-3H to M12-3H	El-cabinet to M12-3H	M12-3H to el-cabinet
M12-5	Female	6 m	M12-C61	2TLA020056R0000							•	
		10 m	M12-C101	2TLA020056R1000							•	
		20 m	M12-C201	2TLA020056R1400							•	
	Female + male	1 m	M12-C112	2TLA020056R2000						•		
		3 m	M12-C312	2TLA020056R2100						•		
		6 m	M12-C612	2TLA020056R2200						•		
		10 m	M12-C1012	2TLA020056R2300						•		
		20 m	M12-C2012	2TLA020056R2400						•		
	Male	6 m	M12-C62	2TLA020056R0200								•
		10 m	M12-C102	2TLA020056R1200								•
M12-8	Female	3 m	M12-C33	2TLA020056R2900				•				
		6 m	M12-C63	2TLA020056R3000				•				
		10 m	M12-C103	2TLA020056R4000				•				
		20 m	M12-C203	2TLA020056R4100				•				
	Female + male	1 m	M12-C134	2TLA020056R5000	•	•	•					
		3 m	M12-C334	2TLA020056R5100	•	•	•					
	Male	By meter	M12-C04	2TLA020055R1700					•			

Cables for Smile 11 RX and ROx

Connector	Female/male	Length	Type	Order code	Smile11 Rx to another M12	Smile 11 Rx to el-cabinet	Smile 11 ROx to Tina 10B	Tina 10B to el-cabinet	Smile 11 ROx to M12-3R	M12-3R to el-cabinet	Tina 10B to M12-3A	M12-3A to M12 3A	El-cabinet to M12-3A	M12-3A to el-cabinet
M12-5	Female	6 m	M12-C61	2TLA020056R0000		•		•		•			•	
		10 m	M12-C101	2TLA020056R1000		•		•		•			•	
		20 m	M12-C201	2TLA020056R1400		•		•		•			•	
	Female + male	1 m	M12-C112	2TLA020056R2000	•		•		•		•	•		
		3 m	M12-C312	2TLA020056R2100	•		•		•		•	•		
		6 m	M12-C612	2TLA020056R2200	•		•		•		•	•		
		10 m	M12-C1012	2TLA020056R2300	•		•		•		•	•		
		20 m	M12-C2012	2TLA020056R2400	•		•		•		•	•		
	Male	6 m	M12-C62	2TLA020056R0200										•
		10 m	M12-C102	2TLA020056R1200										•

Connection examples

Smile reset buttons

Local reset to Orion with Tina 10A/C

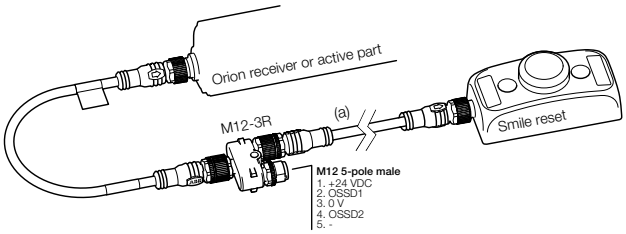

Connection of Smile 11 ROx to Orion through M12-3R. For connection to any control module compatible with OSSD outputs.

Local reset to Orion with Tina 10B

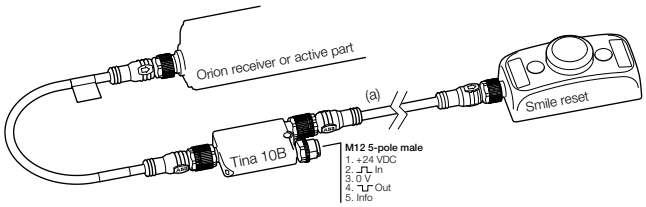

Connection of Smile 11 ROx to Orion through Tina 10B. For connection to Vital control module or Pluto Safety PLC.

Local reset to Eden



Serial connection of Eden with local Smile reset buttons:
- Adam OSSD-Reset M12-8 with Smile 12 RG and M12-3G or M12-3H
- Adam DYN-Reset with Smile 12 RF and M12-3A

Global vs local reset

A global reset is connected directly to the control cabinet with separate cables. The safety controller in the control cabinet supervises the reset and decides the function and actions.

A local reset is connected directly to the safety device, and requires no communication with the control cabinet. The safety device supervises the reset and decides the actions. A local reset simplifies installation and minimizes cabling.

Technical data

Smile reset buttons

Approvals	
Power supply	
LED operating voltage	+24 VDC (maximum +33 VDC)
LED current consumption	20 mA at +24 VDC, 30 mA at +33 VDC
Push button operating voltage	Min: +5 V, max: +35 V
Push button current	Min: 1 mA, max: 100 mA
Push button rated power	Max: 250 mW
Mechanical data	
Color - Enclosure	Yellow
Color - Push button	White
Material - Housing	Polyprobylene PP
Material - Contact	Au
Weight	Approx. 60 g
Protection class	IP65
Mechanical life	1 000 000 operations at 10 mA / +24 VDC
Switching reliability	10×10^{-6} at 5 mA / +24 VDC
Environmental data	
Ambient temperature	-25...+55 °C
Humidity range	35 to 85% (with no icing or condensation)

More information

Fore more information, e.g. the complete technical information, see product manual for:
Smile reset buttons 2TLC172097M0201

Dimension drawings

Smile reset buttons

Smile 11 R

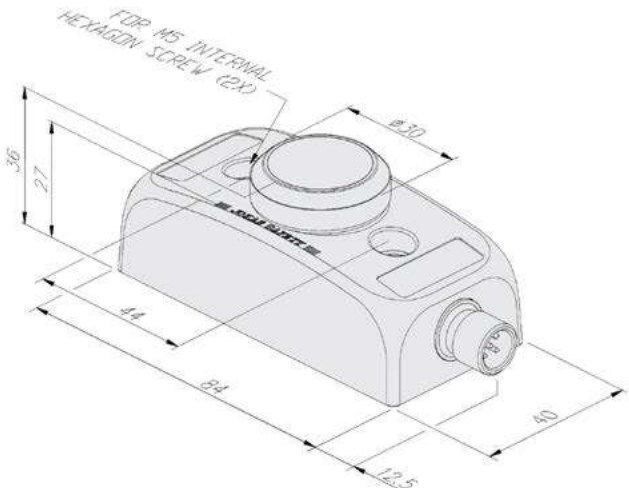

Smile 12 R

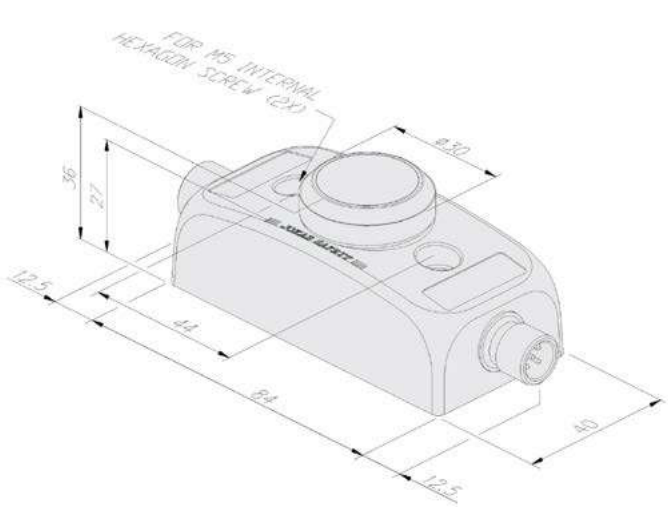

All dimensions in mm

Pilot devices

Reliable products, easy to select and install

ABB pilot devices are engineered for total reliability. Our products are tested to extremes and proven in the toughest environments. Their innovative designs simplify the entire process, from selection to installation. Enclosures, signal towers and signal beacons complete the portfolio.



Continuous operation

Engineered for tough environments
ABB pilot devices are designed with protection degree of up to IP69K and 4X, guaranteeing reliability in extreme environments – making ABB pilot devices ideal for use in demanding industries such as construction and food and beverage. An innovative design that automatically cleans contacts ensures high reliability for all products.

Global availability

Simple selection and stock management
ABB's core offering includes the pilot devices most in demand, so product selection is easier, stock management is simpler and product availability is higher.
Support for exporters is world-class, thanks to ABB's standardized global range, certified to comply with all major international standards.

Easy to install

Save time and space
The unique design of ABB's modular range enables tool-free installation that is quick and simple. It provides high flexibility for last-minute changes. With its all-in-one construction, the compact range reduces installation space and saves time.

Modular plastic range
Flexible configuration

A versatile selection of operators with high levels of flexibility and a broad choice of electrical ratings. Find the perfect solution for almost every application.


Pushbuttons


Heavy duty pushbuttons



Reset pushbuttons



Double pushbuttons


Mushroom pushbuttons


Emergency stop pushbuttons


Machine stop pushbuttons


Pilot lights


Selector switches


Key-operated selector switches


Potentiometers


Joysticks


Toggle switches

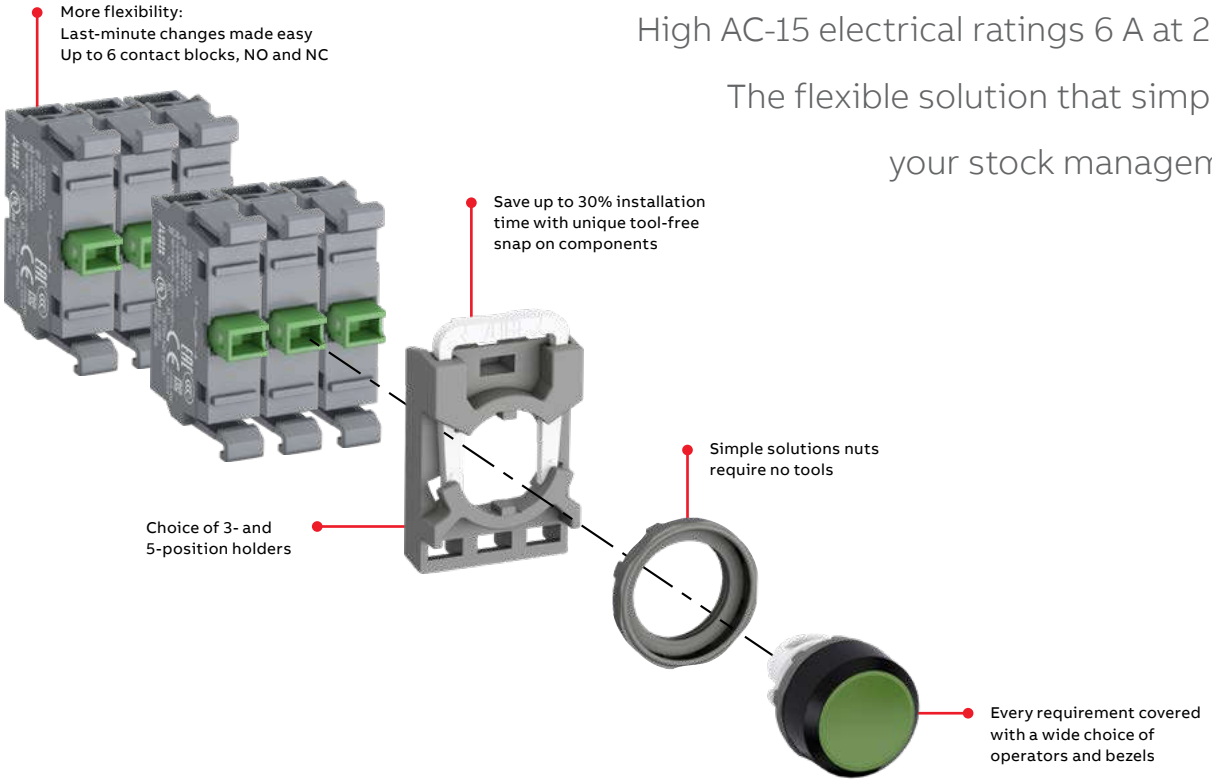

High AC-15 electrical ratings 6 A at 230 V.
The flexible solution that simplifies your stock management.

Modular metal range

Designed for demanding applications

ABB's modular metal range combines ultimate reliability with the total flexibility of a modular range. For mining, construction and heavy industry applications, find the right solution here.



Pushbuttons



Mushroom pushbuttons



Pilot lights



Selector switches



Key-operated selector switches



Joysticks



Toggle switches



Selector pushbuttons



IP66 aluminium metal enclosures are available to accompany this range.



Compact range
All-in-one solution

The most efficient solution available, reducing installation time and cost. The compact range have the highest level of dust and water resistance on the market.



Pushbuttons



Heavy duty pushbuttons



Mushroom pushbuttons



Emergency stop pushbuttons



Machine stop pushbuttons



Pilot lights



Selector switches



Buzzers

Fewer order codes make selection easy and save time.

All-in-one design makes installation fast.



For more models, ordering information and technical data, please see web:
http://new.abb.com/low-voltage/products/pilot-devices

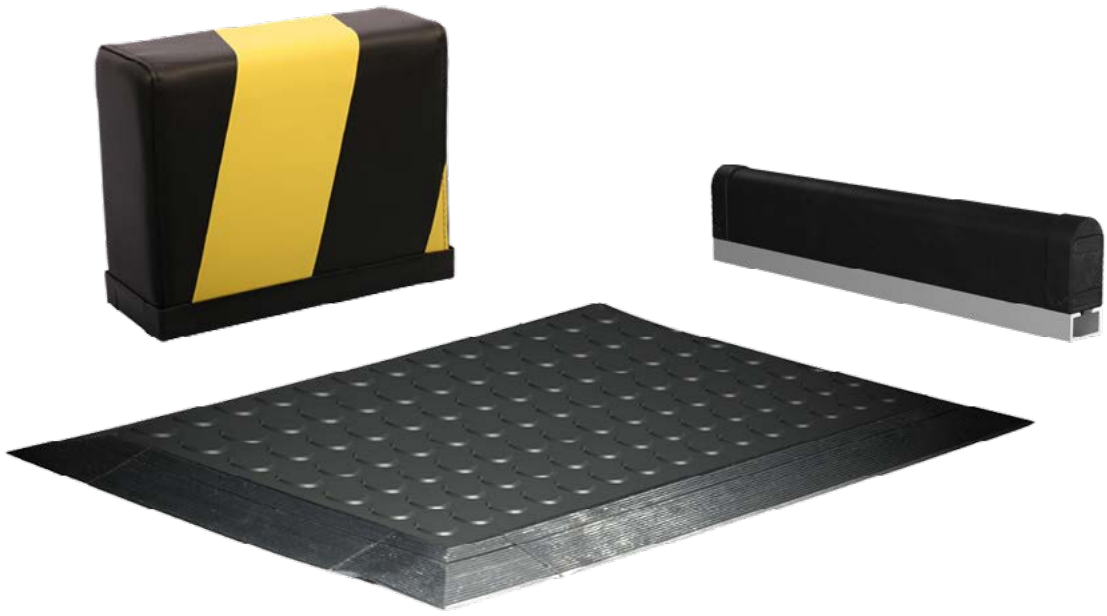

Pressure sensitive devices

7–**2** **Introduction and overview**

7–**4** **Safety edges**

7–**8** **Safety bumpers**

7–**12** **Safety mats**

Introduction and overview
Selection guide

ABB has different types of pressure sensitive devices to cover the needs in various applications.

	Safety edges	**Safety bumpers**	**Safety mats**
Image	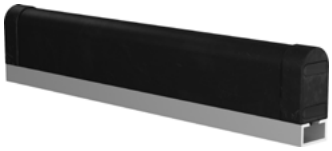		
Type	Pressure sensitive safety edge	Pressure sensitive safety bumper	Pressure sensitive safety mat
Overtravel distance	15-22.7 mm	60-240 mm	-
Application(s)	Sliding doors, gates, roller doors and moving platforms.	Larger sliding doors/hangar doors and automated guided vehicles.	Personal protection within the dangerous area.
Advantages	- Preassembled - Easy to install - Compact - Up to 25 m long	- Preassembled - Easy to install	- Very durable - Easy to install - Custom measurements

Overview
Standards

Pressure sensitive edges and bumpers
Edges and bumpers have an overtravel distance, which is the distance from the compression point where they react until they are maximum compressed. The overtravel distance should be stated in the product information for edges and bumpers. Make sure to select an edge or bumper with a larger overtravel than the stopping distance of the moving part it should be placed on. A minimum safety factor of 1.2 should be used, i.e. the overtravel distance should be 120% of the stopping distance.

Pressures sensitive mats
Mats should only be used as perimeter detection devices if the risk assessment indicates it is a suitable protective device. This could e.g. be in environments with lots of debris and particles from the process that would disturb a light curtain. The width of a safety mat used as perimeter detection should be at least 75 cm to prevent unintentional stepping over.
The minimum safety distance from the outer edge of the safety mat to the dangerous area is calculated using the formula from EN ISO 13855:

$$S = (K \times T) + C$$

S = minimum distance in mm
K = approach speed (of hand or body) in mm/s
T = stopping time of the machine (including reaction time of safety devices) in seconds
C = additional distance in mm based upon the body´s intrusion towards the hazardous area before the safety device has been actuated.

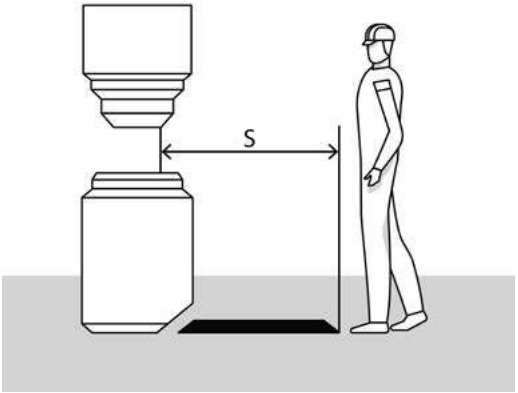

For safety mats the following should be used:

$$S = 1600 \times T + (1200 - 0.4\ H)$$

Where H is the height of the safety mat above the floor (which is usually 0).

Safety edges
TT

Safety edges are pressure sensitive devices that are used on leading edges of doors or moving machine parts to prevent crushing injuries.

The contact edges from ABB are available in two sizes and custom lengths. They are supplied together with an aluminum profile for simple mounting



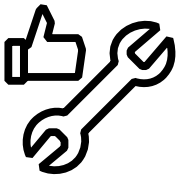

Easy to install

Preassembled
Ordered in custom lengths, preassembled - no gluing required, supplied with matching aluminum support profile.

Serial connection
The twin cable connection makes it easy to connect several safety edges in series.

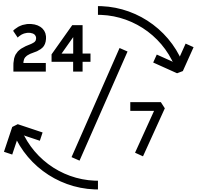

Continuous operation

Material
The contact edges are made in TPE that has a good resistance to ozone, weather and especially against chemicals.

Applications and features
Safety edges

Applications

Sliding doors
Safety edges are placed on the leading edge of sliding doors, gates and roller doors. When the door hits a person or an object, the safety edge sends a signal to the safety controller to stop the motion. The soft parts of the edge should be big enough to allow compression until the motion has ceased.

Moving machine parts
Safety edges can also be placed on moving machine parts, such as the edges of horizontally moving tables and the underside of a scissor lift table.

Features

Safety controllers
The safety edge must be connected to a suitable two-input-channel safety controller that provides all necessary monitoring of the contact edges activation and detection of cable faults. Suitable ABB controllers are Sentry USR safety relays, Pluto programmable safety controllers or Vital safety controllers. When using Vital, a Tina 6 must also be used for short circuit detection.

Internal contacts
Inside the safety edge there is a cast-in contact strip that consists of two conductive alternating surfaces on the inside and a highly-effective insulating shell. There are two conductive wires in the contact surfaces that allow for low ohm measurements even when the contact edge has an extended length. When pressure is applied the two contact surfaces are short circuited, resulting in a stopping signal. The cast-in contact strip is protected against damage by the surrounding chamber. The cast end plugs ensure a permanent contact from the conductive surfaces in the contact strip.

Ordering information

Safety edges

Ordering details

When ordering a safety edge there are two parts that need to be ordered. One order code for production cost and cables, and one order code for the length of the safety edge. Length should be specified in meters.

Example:
One piece of 45 mm high safety edge (plus 14 mm high aluminum rail), 0.73 m long with a 5 meter cable in each end =
- 0.73 m of 2TLA076025R4510
- 1 pcs of 2TLA076010R0500

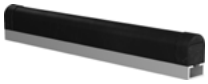

Safety edge TT 35-30 TPE

Safety edge TT

Overtravel[a] mm	Description	Material	Type	Order code
15	30 mm high safety edge with 25-14 aluminum rail. Length in m needs to be specified on order.	TPE	Safety edge TT 25-30 TPE	2TLA076025R3010
22.7	45 mm high safety edge with 25-14 aluminum rail. Length in m needs to be specified on order.	TPE	Safety edge TT 25-45 TPE	2TLA076025R4510

a) At 100 mm/s to 400 N



Safety edge TT 25-45 TPE

Production cost and cables

Length of cables m	Description	Type	Order code
2.5	Production cost with a 2,5 m cable in each end.	Safety edge production cost 2,5m cable	2TLA076010R0100
5	Production cost with a 5 m cable in each end.	Safety edge production cost 5,0m cable	2TLA076010R0500
10	Production cost with a 10 m cable in each end.	Safety edge production cost 10,0m cable	2TLA076010R1000

Technical data
Safety edges

Technical data

Approvals	TÜV NORD
Conformity	CE 2006/42/EC - Machinery 2014/30/EU - EMC 2011/65/EU - RoHS EN ISO 12100:2010, EN ISO 13856-2:2013, EN ISO 13849-1:2015, EN 62061:2005+A2:2015, EN 60204-1:2006+A1:2009, EN 60664-1:2007, EN 61000-6-2:2005, EN 61000-6-4:2007, EN 61508:2010
Functional safety data	
62061:2005+A1:2013	SILCL2
EN ISO 13849-1:2015	PL d/Cat 4 (According to EN ISO 13849-2:2012, Table D.8, a fault exclusion for that the contacts in a pressure sensitive device will not close, can be made. This fault exclusion is limited up to PL d.)
Electrical data	
Electrical capacity	24 V, 10 mA
Mechanical data	
Switching cycles	10 000
Protection class	IP65
Operating temperature	-10 °C to 50 °C
Weight	
TT 25-45	0.34 kg/m
TT 25-30	0.44 kg/m
Material	
Rubber	TPE
Supportive profile	Aluminium
Max Delivery length	25 m
Inactive end region	30 mm
Connection cables	LIY11Y 2 x 0.34 mm
Cable material	PUR flat black

More information
For more information, e.g. the complete technical information, see product manual for:
Safety Edges 2TLC010046M0201.

Connection diagrams
For safety edge connection diagrams please see https://library.abb.com/

Dimension drawings

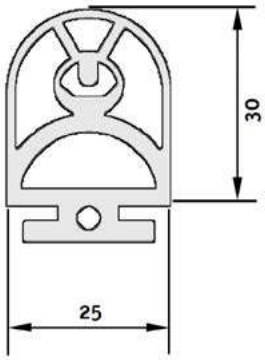

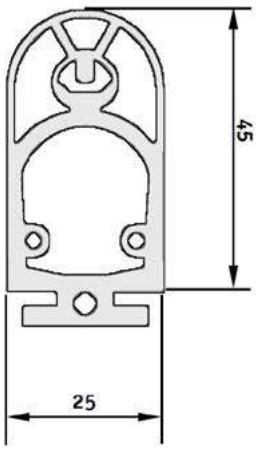

All dimensions in mm

Safety bumper
ASB

Safety bumpers are pressure sensitive devices used to prevent crushing injuries. They are mounted on leading edges of large doors or moving machinery such as automated guided vehicles.

The bumpers are available in four different sizes, and the internal foam construction allows for long deformation zones to provide optimum protection for individuals and material.



Easy to install

Preassembled
Ordered in custom lengths and preassembled to a carrier profile.

Serial connection
The twin cable connection makes it easy to connect several safety bumpers in series.

Continuous operation

Material
The outer material of the safety bumpers is an artificial leather that provides excellent resistance against most liquids, oils and chemicals.

Applications and features
Safety bumper

Applications

Large sliding doors
Safety bumpers are placed on the leading edge of large sliding doors, gates and vertical roller doors. When the door hits a person or an object, the safety bumper sends a signal to the safety controller to stop the motion. The soft parts of the bumper should be big enough to allow compression until the motion has ceased.

Moving vehicles
Safety bumpers can also be placed on moving vehicles, such as AGVs (automated guided vehicles) or high reach fork lifts to detect when a person or an object is hit.

Features

Safety controllers
The safety bumper must be connected to a suitable two-input-channel safety controller that provides all necessary monitoring of the activation of the safety bumpers and detection of cable faults. Suitable ABB controllers are Sentry USR safety relays and Pluto programmable safety controllers.

Internal contact strip
Inside the safety bumper there is a cast-in contact strip that consists of two conductive alternating surfaces on the inside and a highly-effective insulating shell. When pressure is applied the large foam cushion presses the two contact surfaces against each other so that they are short circuited, which the safety controller will detect.

Ordering information
Safety bumper



ASB

Ordering details

When ordering a safety bumper there are two parts that need to be ordered. One order code for production cost and cables, and one order code for the type of bumper and length. Length should be specified in meters. Minimum length is 0.15 m and maximum length is 3 m.

Bumpers are delivered with two 0,2 m cables with M8 connectors attached. Two 5 m cables with M8 connectors are also included.

Example:
One piece of 150x300 mm safety bumper (including aluminum rail), 2.1 m long =
- 2.1 m of 2TLA076200R0700
- 1 pcs of 2TLA076200R0000

Safety bumper ASB

Overtravel[a)] mm	Description	Material	Type	Order code
60	60x100 mm bumper. Length in m needs to be specified on order.	Imitation leather	Bumper ASB 60-100 black/yellow	2TLA076200R0500
120	100x200 mm bumper. Length in m needs to be specified on order.	Imitation leather	Bumper ASB 100-200 black/yellow	2TLA076200R0600
180	150x300 mm bumper. Length in m needs to be specified on order.	Imitation leather	Bumper ASB 150-300 black/yellow	2TLA076200R0700
240	200x400 mm bumper. Length in m needs to be specified on order.	Imitation leather	Bumper ASB 200-400 black/yellow	2TLA076200R0800

a) 60% of bumper height at 10 mm/s

Production cost and cables

Description	Type	Order code
Bumpers production cost, including aluminum rail and cables	Bumper production cost	2TLA076200R0000

Technical data
Safety bumpers

Technical data

Approvals	TÜV NORD
Conformity	CE 2006/42/EC - Machinery 2014/30/EU - EMC 2011/65/EU - RoHS EN ISO 12100:2010, EN ISO 13856-3:2013, EN ISO 13849-1:2015, EN 62061:2005+A2:2015, EN 60204-1:2006+A1:2009, EN 60664-1:2007, EN 61000-6-2:2005, EN 61000-6-4:2007, EN 61508:2010
Functional safety data	
62061:2005+A1:2013	SILCL2
EN ISO 13849-1:2015	PL d/Cat 4 (According to EN ISO 13849-2:2012, Table D.8, a fault exclusion for that the contacts in a pressure sensitive device will not close, can be made. This fault exclusion is limited up to PL d.)
Electrical data	
Electrical capacity	24 V, 10 mA
Mechanical data	
Actuating force	< 150 N by test specimen Ø80 mm (according to EN ISO 13856-3) < 400 N by test specimen 45x400 mm (according to EN ISO 13856-3)
Inactive edge region	0 mm
Switching cycles	> 10 000
Protection class	IP54
Temperature range	0 °C to + 50 °C
Connection cable	Pluggable 2 x 0.34 mm² (PUR black) with M8 connector 0.12m
Material	Artificial leather
Chemical resistance	Good chemical resistance, except for Ethyl acetate and Acetone.
Dimensioning of bumper height	
Actuating distance	15% of bumper height
Overtravel distance	60% of bumper height
Maximum compression	75% of bumper height

More information
For more information, e.g. the complete technical information, see product manual for:
Safety Bumpers 2TLC010045M0201.

Connection diagrams
For safety bumpers connection diagrams please see https://library.abb.com/

Dimension drawings

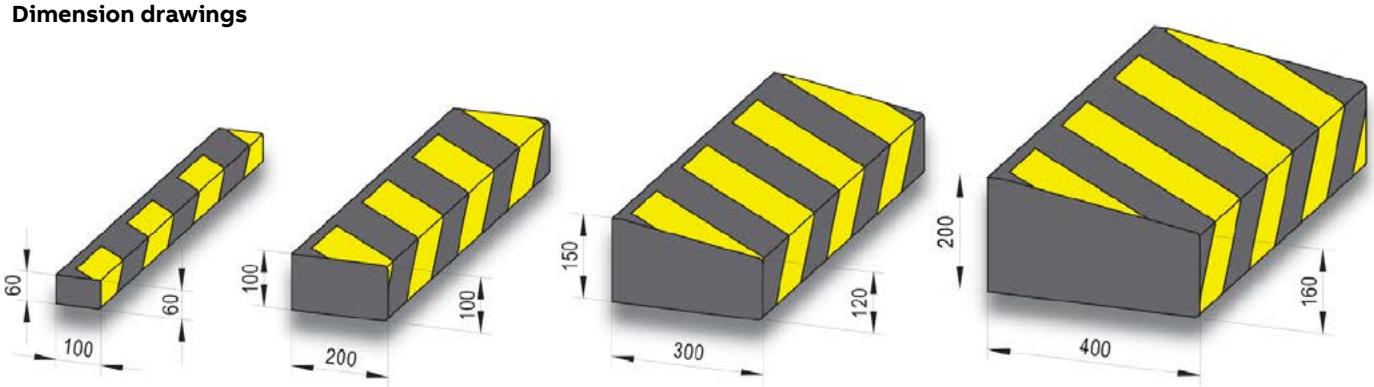

All dimensions in mm

Safety mats
ASK

Safety mats are pressure sensitive devices placed on the floor to detect if someone is standing on them. They are mostly used inside hazard zones around e.g. presses, robots and production lines to prevent the machine from running when someone is in the hazard zone.



Easy to install

Preassembled
Ordered in standard or custom sizes with molded ramp and preassembled with two cables (M8 male and female connector).

Serial connection
The twin cable connection makes it easy to connect several safety mats in series. Extension cables exist to further simplify connection.

Continuous operation

Material
The surface material of the safety mat is a slip-free rubber with excellent resistance against oil, water and grease.

Applications and features
Safety mats

Applications

Personal protection within hazard zones
Safety mats are mostly used inside hazard zones around e.g. presses, robots and production lines to prevent the machine from running when someone is in the hazard zone.

Perimeter guard
Safety mats can also be used as a perimeter guard e.g. to replace a light curtain in applications where there is a lot of debris or particles in the air that would trigger the light curtain.

Features

Safety controllers
The safety mat must be connected to a suitable two-input-channel safety controller that provides all necessary monitoring of the activation of the safety map and detection of cable faults. Suitable ABB controllers are Sentry USR safety relays, Pluto programmable safety controllers or Vital safety controllers. When using Vital, a Tina 6 must also be used for short circuit detection.

Mat construction
The safety mat is made of a sandwich construction. When stepped upon, two internal conducting plates connect and result in a short circuit that the safety controller detects.

Ramp rail
At the edges of the safety mat there is a molded ramp rail. The ramp rail is 35 mm wide and is not included in the measurement of the ramp (i.e. the actual dimensions of a 1000 x 1000 mm safety mat is 1070 x 1070 mm). The purpose of the ramp rail is to minimize the tripping risk and for fastening of the safety mat, since screws can be drilled through the ramp rail. The ramp rail can be cut off using a knife if the safety mat is to be placed close to a wall or next to another safety mat.

Ordering information

Safety mats

Ordering details

When ordering a safety mat you can either select one of the standard sizes or a custom size. For standard sizes only one order code is necessary. For custom sizes two parts need to be ordered. One order code for base price, and one order code for the size in m^2.
Width x length also needs to be specified in text on the order in mm. Maximum dimensions are 2350 x 1350 mm and minimum dimensions 100 x 100 mm.

Example:
One piece of 450 x 1150 mm safety mat =
- 1 pcs of 2TLA076301R0200
- 0.5175 m^2 of 2TLA076301R0600
- Dimensions 450 x 1150 mm



2TLC010035V0201

ASK

Safety mat ASK – standard sizes

Size mm	Description	Connectors	Type	Order code
750x1000	750x1000 safety mat with molded ramp rail and two 5 m cables	1x M8 male 1x M8 female	Safety mat ASK T4 750x1000mm	2TLA076310R1000
1000x1000	1000x1000 safety mat with molded ramp rail and two 5 m cables	1x M8 male 1x M8 female	Safety mat ASK T4 1000x1000mm	2TLA076310R1100
1000x1500	1000x1500 safety mat with molded ramp rail and two 5 m cables	1x M8 male 1x M8 female	Safety mat ASK T4 1000x1500mm	2TLA076310R1200

Safety mat ASK – custom sizes

Description	Connectors	Type	Order code
Base price for custom made safety mat with molded ramp rail	-	Safety mat ASK CM T4, base price	2TLA076301R0200
Order code for size (m^2) and two 5 m cables. Specify dimensions (width x length in mm) in text.	1x M8 male 1x M8 female	Safety mat ASK CM T4	2TLA076301R0600

Accessories

Description	Length m	Connectors	Type	Order code
Extension cable	2.5	1x M8 male 1x M8 female	Safety mat extension cable 2.5 m	2TLA076900R3200
Extension cable	5.0	1x M8 male 1x M8 female	Safety mat extension cable 5.0 m	2TLA076900R3300

Technical data

Safety mats

Technical data	
Approvals	
Conformity	CE 2006/42/EC - Machinery 2014/30/EU - EMC 2011/65/EU - RoHS EN ISO 12100:2010, EN ISO 13856-1:2013, EN ISO 13849-1:2015, EN 62061:2005+A2:2015, EN 60204-1:2006+A1:2009, EN 60664-1:2007, EN 61000-6-2:2005, EN 61000-6-4:2007, EN 61508:2010
Functional safety data	
62061:2005+A1:2013	SILCL2
EN ISO 13849-1:2015	PL d/Cat 4 B_{10D}: 2 000 000 (According to EN ISO 13849-2:2012, Table D.8, a fault exclusion for that the contacts in a pressure sensitive device will not close, can be made. This fault exclusion is limited up to PL d.)
Electrical data	
Electrical capacity	24 V, 100 mA
Response time	
Including Sentry	< 20 ms
Including Pluto (single Pluto)	< 30 ms
Including Pluto incl. Pluto bus	Normal condition: < 40 ms At fault condition: < 70 ms
With function block "BigMat"	Add 30 ms
Mechanical data	
Max. area	Entire safety mat = 2350 x 1350 mm, 10 m2, (divided safety mat) Rec. relation max 3:1, Min 100 x 100 mm
Height	14 mm
Weight	26 Kg/m2
Material	Black polyurethane
Protection class	IP65
Ambient air temperature	0° C to + 60° C
Cable	2 x 5 m; 2 x 0.34 mm2 PU sheathed
Mechanical life	>1.0 x 106 Load shifting

More information

For more information, e.g. the complete technical information, see product manual for:
Safety Mats 2TLC010047M0201.

Connection diagrams

For safety mats connection diagrams please see https://library.abb.com/


ABB
13NO
21NC
31NC
43NO
14NO
22NC
32NC
44NO
max. 0.6A
max. 9A

Contactors and motor starters

8–**2** **Introduction and overview**

8–**4** **Safety contactors**

8–**10** **Electronic compact starters**

Introduction and overview
Selection guide

ABB offers a wide range of output devices for safely removing power to dangerous machinery. Apart from contactors and electronic compact starters, we also have frequency converters with safe torque off (STO) and industrial robots with safety stop inputs.

	AFS	**HF**
Image		
Type	Safety contactor	Electronic compact starters
Description	A simple and reliable unit for monitoring and controlling circuits.	A compact and space saving alternative to contactors, using a combination of semiconductor technology and electromechanical relays. Monitoring and control of circuits with numerous additional features.
Applications	Removing control power to dangerous machinery up to 400 W/400 V.	Removing control power to dangerous machinery up to 3 kW/400 V, as well as direct and reversed start of motors.
Advantage	- Easy to use - Fast switching - High switching capacity	- Space saving up to 90% with only 22.5 mm in control cabinets - Extended equipment life time and decreased maintenance cost - Reduced wiring time - Safety variants comply with SIL3, PL e and are ATEX certified

AFS 3-pole contactors
Dedicated for safety applications

Designed for machine safety applications, AFS contactors now complete ABB's safety component portfolio.

With a range stretching from 9 A up to 750 A for motor starting applications and with a design complying with the latest safety standard, the AFS range of contactors is the given choice for any application that puts the users safety first.



Safety and protection

Safety in all things
ABB's AFS contactors can be easily integrated in machine manufacturer's systems complying with main standards EN ISO 13849 and EN 62061 - guaranteeing the safe use of your machinery and equipment. An easily identifiable yellow low energy auxiliary contact block ensures the status feedback circuits required in machine safety applications.

Continuous operation

Secure uptime
The AFS contactor secures system uptime. Featuring ABB's tested and proven AF technology, AFS contactors are reliable in any network. Direct control by safety PLCs or safety relays ensures the required safety performance.

Speed up your projects

Simplify design
AFS design makes integration easier. With energy efficient coils smaller transformers can be used and panel space more efficiently used. Wide voltage range coils and easily available safety data simplifies product selection. In addition, all the safety data for the AFS contactors is available using common safety design tools.

AFS 3-pole contactors

Dedicated for safety applications

Guaranteed contactor status

ABB's permanently fixed auxiliary contact blocks guarantee the correct contactor status at all times. Mechanically linked and mirror contacts provide the performance required in feedback circuits. This prevents any unexpected state changes of auxiliary contact if main contacts become welded or stuck and ensures an accurate depiction of the safety system status displayed at all times. Mechanically linked and mirror contact symbols are marked on the yellow auxiliary block.

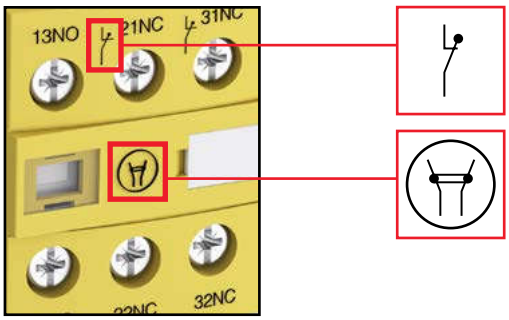

Fast response for increased safety

In safety applications speed is essential to protect operators. AFS contactors feature fast opening times, down to 20 ms for certain PLC controlled contactors, ensuring that when a dangerous failure is detected the operator is kept out of harms way.

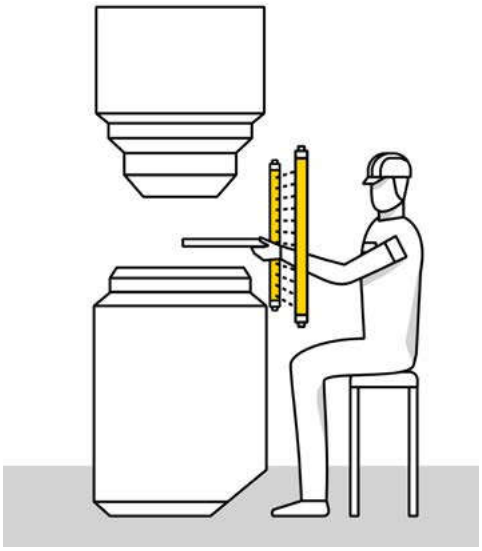

Prevent unexpected operations

Factory fitted auxiliary contact blocks that are permanently fixed protects devices against accidental operation and misuse. A factory-fitted transparent cover on contactors up to 96 A shields the contactor status indicator, providing additional protection from misuse.

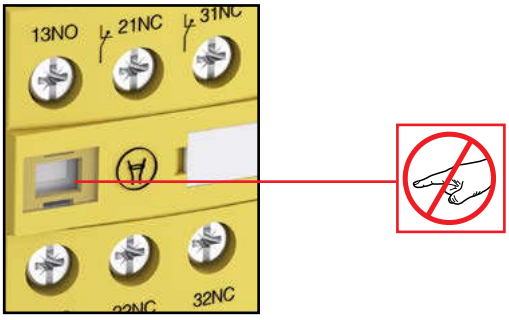

Simplify calculation of your installation safety level

AFS contactor safety data is available in safety design tools Sistema and FSDT, dedicated software for determining the Performance Level (PL) and Safety Integrity Level (SIL) of safety functions and generating technical documentations.

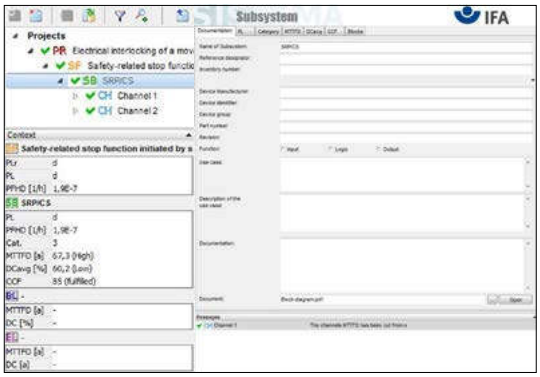

AFS 3-pole contactors

Dedicated for safety applications

Control by safety PLCs or safety relays

ABB's AFS contactors can be controlled directly by safety PLCs or safety relays, or by a power relay depending on size.

AFS contactors is part of the ABB safety family, and selected sizes are tested together with ABB's Pluto safety PLC and the Sentry safety relay. For full coordination please advise ABB. The auxiliary contacts only require a minimum switching capacity of 3 V / 1 mA. They guarantee system status feedback, making the system safe and reliable.

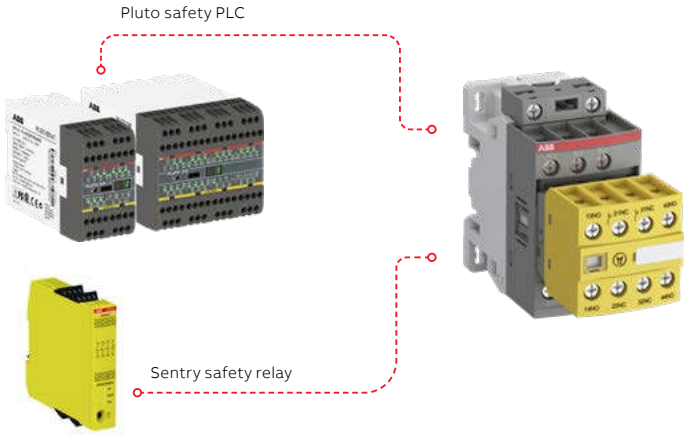

Easy safety chain identification

The yellow housing of ABB's AFS contactors makes identifying the safety product in your panel quicker. During routine maintenance work, ABB's intuitive design saves valuable time.



Panel size reduction

Utilizing AF technology, AFS coils needs up to 60% less energy than conventional contactor coils. This allows for smaller transformers to be used for contactor control, which in turn allows for more efficient use of panel space. Using AFS contactors saves money and precious space.

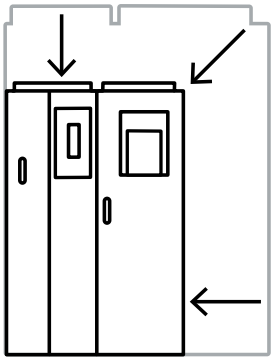

Built-in surge suppression

Unlike conventional contactors, ABB's AFS contactors have built-in surge suppression, preventing surges from ever reaching the control circuit. With no need for the usual external surge suppressor add-ons, ABB's solution means one less device to install and one less complication to manage.

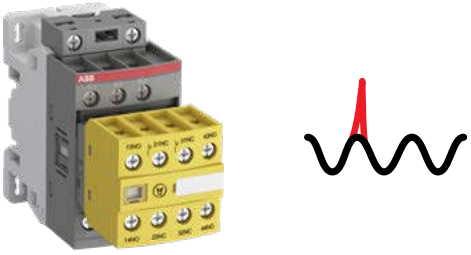

AFS 3-pole contactors

Dedicated for safety applications


1SBC101536V0014

AFS16-30-22


1SBC101539V0014

AFS38-30-22


1SBC101542V0014

AFS65-30-22


1SBC101544V0014

AFS96-30-22


1SFC101246V0001

AFS146-30-12


1SFC101244V0001

AFS146-30-12B

IEC		UL/CSA		Rated control circuit voltage Uc min. ... Uc max.		Auxiliary contacts fitted	Type	Order code	Weight
Rated operational power 400 V AC-3	Current θ ≤ 40 °C AC-1	3-phase motor rating 480 V	General use rating 600 V AC						
kW	A	hp	A	V 50/60 Hz	V DC				kg
4	25	5	25	-	24	2 2	AFS09Z-30-22-30	1SBL136082R3022	0.490
				24...60	20...60 (1)	2 2	AFS09-30-22-11	1SBL137082R1122	0.320
				100...250	100..250	2 2	AFS09-30-22-13	1SBL137082R1322	0.320
5.5	28	7.5	28	-	24	2 2	AFS12Z-30-22-30	1SBL156082R3022	0.490
				24...60	20...60 (1)	2 2	AFS12-30-22-11	1SBL157082R1122	0.320
				100...250	100..250	2 2	AFS12-30-22-13	1SBL157082R1322	0.320
7.5	30	10	30	-	24	2 2	AFS16Z-30-22-30	1SBL176082R3022	0.490
				24...60	20...60 (1)	2 2	AFS16-30-22-11	1SBL177082R1122	0.320
				100...250	100..250	2 2	AFS16-30-22-13	1SBL177082R1322	0.320
11	45	15	45	-	24	2 2	AFS26Z-30-22-30	1SBL236082R3022	0.540
				24...60	20...60 (1)	2 2	AFS26-30-22-11	1SBL237082R1122	0.360
				100...250	100..250	2 2	AFS26-30-22-13	1SBL237082R1322	0.360
15	50	20	50	-	24	2 2	AFS30Z-30-22-30	1SBL276082R3022	0.540
				24...60	20...60 (1)	2 2	AFS30-30-22-11	1SBL277082R1122	0.360
				100...250	100..250	2 2	AFS30-30-22-13	1SBL277082R1322	0.360
18.5	50	20	50	-	24	2 2	AFS38Z-30-22-30	1SBL296082R3022	0.540
				24...60	20...60 (1)	2 2	AFS38-30-22-11	1SBL297082R1122	0.360
				100...250	100..250	2 2	AFS38-30-22-13	1SBL297082R1322	0.360
18.5	70	30	60	24...60	20...60 (1)	2 2	AFS40-30-22-11	1SBL347082R1122	1.020
				100...250	100..250	2 2	AFS40-30-22-13	1SBL347082R1322	1.000
22	100	40	80	24...60	20...60 (1)	2 2	AFS52-30-22-11	1SBL367082R1122	1.020
				100...250	100..250	2 2	AFS52-30-22-13	1SBL367082R1322	1.000
30	105	50	90	24...60	20...60 (1)	2 2	AFS65-30-22-11	1SBL387082R1122	1.020
				100...250	100..250	2 2	AFS65-30-22-13	1SBL387082R1322	1.000
37	125	60	105	24...60	20...60 (1)	2 2	AFS80-30-22-11	1SBL397082R1122	1.270
				100...250	100..250	2 2	AFS80-30-22-13	1SBL397082R1322	1.220
45	130	60	115	24...60	20...60 (1)	2 2	AFS96-30-22-11	1SBL407082R1122	1.270
				100...250	100..250	2 2	AFS96-30-22-13	1SBL407082R1322	1.220
For connection with built-in cable clamps									
55	160	75	160	24...60	20...60	1 2	AFS116-30-12-11	1SFL427081R1112	1.750
				48...130	48...130	1 2	AFS116-30-12-12	1SFL427081R1212	1.750
				100...250	100...250	1 2	AFS116-30-12-13	1SFL427081R1312	1.750
						1 2	AFS116-30-12-33 (2)	1SFL427081R3312	1.750
				250...500	250...500	1 2	AFS116-30-12-14	1SFL427081R1412	1.750
						1 2	AFS116-30-12-34 (2)	1SFL427081R3412	1.750
75	225	100	200	24...60	20...60	1 2	AFS146-30-12-11	1SFL467081R1112	1.750
				48...130	48...130	1 2	AFS146-30-12-12	1SFL467081R1212	1.750
				100...250	100...250	1 2	AFS146-30-12-13	1SFL467081R1312	1.750
						1 2	AFS146-30-12-33 (2)	1SFL467081R3312	1.750
				250...500	250...500	1 2	AFS146-30-12-14	1SFL467081R1412	1.750
						1 2	AFS146-30-12-34 (2)	1SFL467081R3412	1.750
With bar connections									
55	160	75	160	24...60	20...60	1 2	AFS116-30-12B-11	1SFL427082R1112	1.500
				48...130	48...130	1 2	AFS116-30-12B-12	1SFL427082R1212	1.500
				100...250	100...250	1 2	AFS116-30-12B-13	1SFL427082R1312	1.500
						1 2	AFS116-30-12B-33 (2)	1SFL427082R3312	1.500
				250...500	250...500	1 2	AFS116-30-12B-14	1SFL427082R1412	1.500
						1 2	AFS116-30-12B-34 (2)	1SFL427082R3412	1.500
75	225	100	200	24...60	20...60	1 2	AFS146-30-12B-11	1SFL467082R1112	1.500
				48...130	48...130	1 2	AFS146-30-12B-12	1SFL467082R1212	1.500
				100...250	100...250	1 2	AFS146-30-12B-13	1SFL467082R1312	1.500
				250...500	250...500	1 2	AFS146-30-12B-14	1SFL467082R1412	1.500

AFS 3-pole contactors

Dedicated for safety applications



AFS205-30-12



AFS370-30-12



AFS460-30-12



AFS750-30-12

IEC		UL/CSA		Rated control circuit voltage Uc min. ... Uc max.		Auxiliary contacts fitted	Type	Order code	Weight
Rated operational power 400 V AC-3	Current θ ≤ 40 °C AC-1	3-phase motor rating 480 V	General use rating 600 V AC						
kW	A	hp	A	V 50/60 Hz	V DC				kg
90	275	125	250	24...60	20...60	1 2	AFS190-30-12-11	1SFL427082R1112	3.000
				48...130	48...130	1 2	AFS190-30-12-12	1SFL427081R1212	3.000
				100...250	100...250	1 2	AFS190-30-12-13	1SFL427081R1312	3.000
				100...250	100...250	1 2	AFS190-30-12-33 (2)	1SFL427081R3312	3.000
				250...500	250...500	1 2	AFS190-30-12-14	1SFL427081R1412	3.000
				250...500	250...500	1 2	AFS190-30-12-34 (2)	1SFL427081R3412	3.000
110	350	150	300	24...60	20...60	1 2	AFS205-30-12-11	1SFL527082R1112	3.000
				48...130	48...130	1 2	AFS205-30-12-12	1SFL527082R1212	3.000
				100...250	100...250	1 2	AFS205-30-12-13	1SFL527082R1312	3.000
				100...250	100...250	1 2	AFS205-30-12-33 (2)	1SFL527082R3312	3.000
				250...500	250...500	1 2	AFS205-30-12-14	1SFL527082R1412	3.000
				250...500	250...500	1 2	AFS205-30-12-34 (2)	1SFL527082R3412	3.000
132	400	200	350	24...60	20...60	1 2	AFS265-30-12-11	1SFL547082R1112	4.675
				48...130	48...130	1 2	AFS265-30-12-12	1SFL547082R1212	4.675
				100...250	100...250	1 2	AFS265-30-12-13	1SFL547082R1312	4.675
				100...250	100...250	1 2	AFS265-30-12-33 (2)	1SFL547082R3312	4.675
				250...500	250...500	1 2	AFS265-30-12-14	1SFL547082R1412	4.675
				250...500	250...500	1 2	AFS265-30-12-34 (2)	1SFL547082R3412	4.675
160	500	250	400	24...60	20...60	1 2	AFS305-30-12-11	1SFL587082R1112	4.675
				48...130	48...130	1 2	AFS305-30-12-12	1SFL587082R1212	4.675
				100...250	100...250	1 2	AFS305-30-12-13	1SFL587082R1312	4.675
				100...250	100...250	1 2	AFS305-30-12-33 (2)	1SFL587082R3312	4.675
				250...500	250...500	1 2	AFS305-30-12-14	1SFL587082R1412	4.675
				250...500	250...500	1 2	AFS305-30-12-34 (2)	1SFL587082R3412	4.675
200	600	300	520	24...60	20...60	1 2	AFS370-30-12-11	1SFL607082R1112	4.675
				48...130	48...130	1 2	AFS370-30-12-12	1SFL607082R1212	4.675
				100...250	100...250	1 2	AFS370-30-12-13	1SFL607082R1312	4.675
				100...250	100...250	1 2	AFS370-30-12-33 (2)	1SFL607082R3312	4.675
				250...500	250...500	1 2	AFS370-30-12-14	1SFL607082R1412	4.675
				250...500	250...500	1 2	AFS370-30-12-34 (2)	1SFL607082R3412	4.675
200	600	350	550	-	24...60	1 2	AFS400-30-12-68	1SFL577081R6812 (3)	4.675
				48...130	48...130	1 2	AFS400-30-12-69	1SFL577081R6912	12.000
				100...250	100...250	1 2	AFS400-30-12-70	1SFL577081R7012	12.000
				250...500	250...500	1 2	AFS400-30-12-71	1SFL577081R7112	12.000
250	700	400	650	-	24...60	1 2	AFS460-30-12-68	1SFL597081R6812 (3)	12.000
				48...130	48...130	1 2	AFS460-30-12-69	1SFL597081R6912	12.000
				100...250	100...250	1 2	AFS460-30-12-70	1SFL597081R7012	12.000
				250...500	250...500	1 2	AFS460-30-12-71	1SFL597081R7112	12.000
315	800	500	750	-	24...60	1 2	AFS580-30-12-68	1SFL617081R6812 (3)	12.000
				48...130	48...130	1 2	AFS580-30-12-69	1SFL617081R6912	12.000
				100...250	100...250	1 2	AFS580-30-12-70	1SFL617081R7012	12.000
				250...500	250...500	1 2	AFS580-30-12-71	1SFL617081R7112	12.000
400	1050	600	900	-	24...60	1 2	AFS750-30-12-68	1SFL637081R6812 (3)	12.000
				48...130	48...130	1 2	AFS750-30-12-69	1SFL637081R6912	12.000
				100...250	100...250	1 2	AFS750-30-12-70	1SFL637081R7012	12.000
				250...500	250...500	1 2	AFS750-30-12-71	1SFL637081R7112	12.000

(1) AFS..-30-..-11 for control by transistor outputs of safety PLCs and safety relays use interface relay RA4 1SBN060100R1000.
(2) With built-in PLC interface (coil 33 and 34)
(3) The connection polarities indicated close to the coil terminals must be respected: A1 for the positive pole and A2 for the negative pole.
Note : Accessories available. Please consult the AFS contactors for safety application catalog.

Products safety data for machine manufacturers following harmonized EN standards:

- EN ISO 13849
- EN 62061

B10d - Calculated for 50% of the rated current value Ie at AC-3 / 400 V

AFS09 ... AFS370 : 1.3 million operating cycles

AFS400 ... AFS750 : 0.68 million operating cycles

Electronic compact starters: HF range
A compact solution with great functionality

ABB's electronic compact starter packs more functions into less space. The compact unit is just 22.5 mm wide and is suitable for three-phase motor loads up to 3 kW - 400 V AC.

Direct-on-line and reversed starter with overload protection and emergency stop versions are available, making the range a perfect fit for high frequent and reliable long life switching of e.g. paper machines, conveyors, pumps, compressors and machine tools.



Saving space

Up to 90% less space required
ABB's electronic compact starter saves cabinet space, and is especially effective for group mounting. The starter is just 22.5 mm wide and yet still provides motor starting functionalities with motor protection and safety embedded.

Safety and protection

Integrated safety function
Protect your personnel with emergency stop version complying with SIL3, PL e safety standards.

Extend equipment life time and decrease maintenance cost as our starters service life is 10 times higher than electromechanical solutions.

Easy to install

Up to 75% reduced time in wiring
Wiring time during installation is cut to a minimum with motor protection, reversing function and emergency stop already integrated in the product.

With just one component to install, the risk of wiring errors is lower. Separate overload protection is no longer needed.

Electronic compact starters

All-in-one: four functions in one starter

Direct-on-line
ABB's direct-on-line starter comes with a function that runs the motor in a forward direction. An integrated electronic overload relay also helps protect the motor.

Reversing capability
Reversing functionality is already integrated in our hybrid starter. This results in avoiding wiring faults and additionally saving time and space.

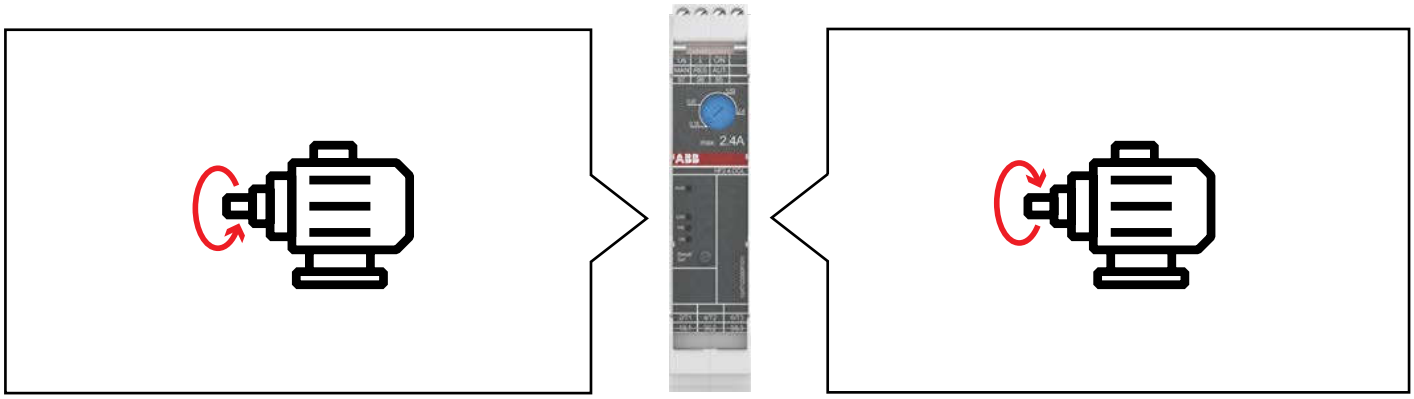

Direct-on-line and reversing function in only one product

Emergency stop
ABB's HF safety range supports safety applications complying to SIL3 and PL e safety level in combination with modular safety relays such as ABB's Sentry SSR10.



Overload protection
ABB offers three variants with wide setting ranges, using an electronic relay to protect the motor from overload. Protection against phase asymmetry and phase failure is also integrated.

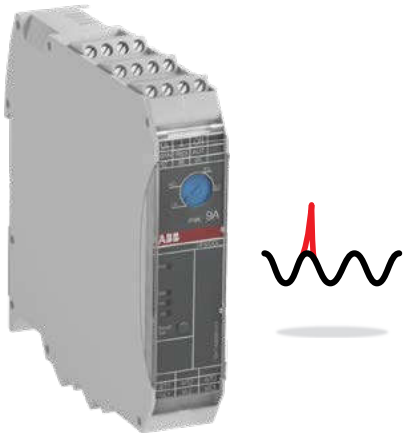

Electronic compact starters

Features and benefits

Space-saving
Using an HF electronic compact starter saves space – especially when group-mounting units. With a width of just 22.5 mm and high function density, the unit fits any control cabinet. Smaller footprints for more compact systems are also possible.

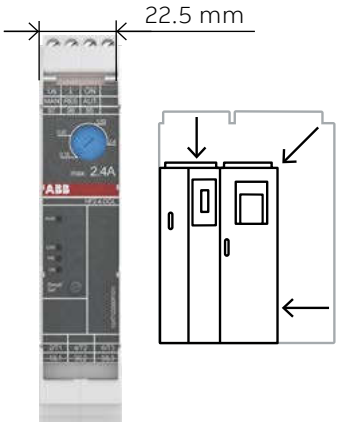

Less wiring
The control circuit is connected on the upper side of the device with the main circuit on the underside. The all-in-one functionality reduces wiring, saving time and money – and reducing faults.

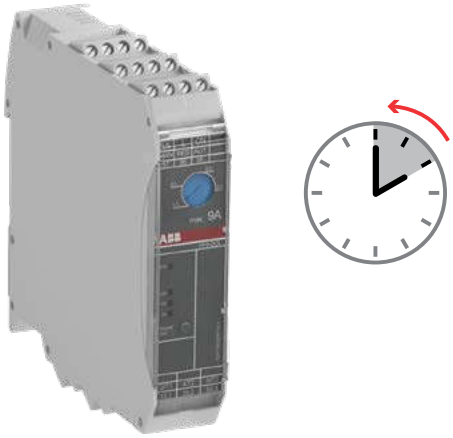

Reset function
After the overload function has tripped, the electronic compact starter can be reset automatically, manually or remotely. The LEDs on the device are visualizing that an error has occurred. Additionally, a feedback relay will be activated.

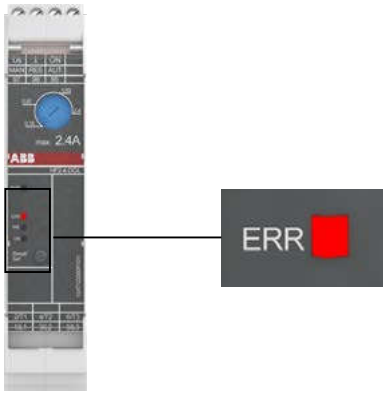

Longer working life
ABB's hybrid technology improves durability and reduces power losses. Semiconductors switch on and off the unit and the relays remain active while the motor is running. With a lifespan of 30 million cycles now achievable, maintenance costs are reduced.

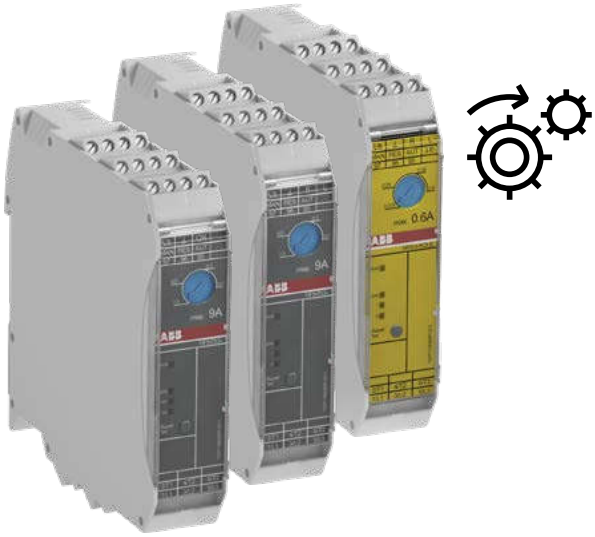

HF0.6, HF2.4, HF9 electronic compact starters

Direct-on-line starter



HF0.6-DOL-24VDC



HF0.6-DOLE-24VDC

Description

The HF-DOL-range is used for the direct-on-line start of motors and the switching of non-resistive loads. With contactor and overload relay functionalities integrated into one device, the results are faster wiring times and fewer faults. The range covers 0.6 A, 2.4 A and up to 9 A - for motors up to 3 kW – 500 V AC. The integrated electronic overload protection has a wide setting range that enables just three models to cover all requirements.

The control supply voltage is 24 V DC. For the control and main connection points ABB offers screw connections. ABB also offers a HF-DOLE safety range with emergency stop function. This offers Safety Integrity Level 3, in accordance with functional safety standard IEC 61508-1 and Performance Level 'e' in accordance with ISO 13849-1. The safety range is ATEX-certified.

Ordering details

Rated operational current AC-53a	Rated operational power AC-53a	Rated operational current AC-51	Setting range	Full load amps motor use	Type	Order code	Weight (1 pce)
A	kW	A	A	A			kg
Direct-on-line starter with overload protection							
0.6	0.18 (400V)	0.6	0.075 ... 0.6	0.6	HF0.6-DOL-24VDC	1SAT112000R1011	0.205
2.4	0.75 (400V)	2.4	0.18 ... 2.4	2.4	HF2.4-DOL-24VDC	1SAT122000R1011	0.218
6.5	3.00 (400V)	9.0	1.5 ... 9.0	6.5	HF9-DOL-24VDC	1SAT142000R1011	0.206
Direct-on-line starter with overload protection and emergency stop							
0.6	0.18 (400V)	0.6	0.075 ... 0.6	0.6	HF0.6-DOLE-24VDC	1SAT113000R1011	0.205
2.4	0.75 (400V)	2.4	0.18 ... 2.4	2.4	HF2.4-DOLE-24VDC	1SAT123000R1011	0.218
6.5	3.00 (400V)	9.0	1.5 ... 9.0	6.5	HF9-DOLE-24VDC	1SAT143000R1011	0.206

Main dimensions mm, inches

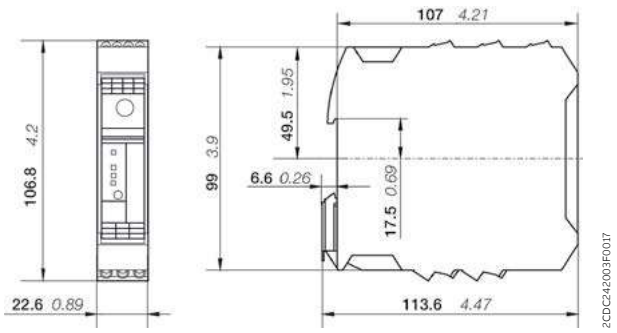

HF0.6, HF2.4, HF9

HF0.6, HF2.4, HF9 electronic compact starters

Reversing starter



HF0.6-ROL-24VDC



HF0.6-ROLE-24VDC



HF9-R-24VDC

Description

The HF-ROL-range is used for forward and reverse running motors, as well as for switching non resistive loads. With contactor and overload relay functionalities integrated into one device, the results are faster wiring times and fewer faults. The range covers 0.6 A, 2.4 A and up to 9 A - for motors up to 3 kW – 500 V AC. The integrated electronic overload protection has a wide setting range that enables just three models to cover all requirements.

The control supply voltage is 24 V DC. For the control and main connection points ABB offers screw connections. ABB also offers a HF-ROLE safety range with emergency stop function. This offers Safety Integrity Level 3, in accordance with functional safety standard IEC 61508-1 and Performance Level 'e' in accordance with ISO 13849-1. The safety range is ATEX-certified.

Ordering details

Rated operational current AC-53a	Rated operational power AC-53a	Rated operational current AC-51	Setting range	Full load amps motor use	Type	Order code	Weight (1 pce)
A	kW	A	A	A			kg
Reversing starter							
6.5	3.00 (400V)	9.0	-	6.5	HF9-R-24VDC	1SAT144000R1011	0.174
Reversing starter with overload protection							
0.6	0.18 (400V)	0.6	0.075 ... 0.6	0.6	HF0.6-ROL-24VDC	1SAT115000R1011	0.217
2.4	0.75 (400V)	2.4	0.18 ... 2.4	2.4	HF2.4-ROL-24VDC	1SAT125000R1011	0.219
6.5	3.00 (400V)	9.0	1.5 ... 9.0	6.5	HF9-ROL-24VDC	1SAT145000R1011	0.218
Reversing starter with overload protection and emergency stop							
0.6	0.18 (400V)	0.6	0.075 ... 0.6	0.6	HF0.6-ROLE-24VDC	1SAT116000R1011	0.218
2.4	0.75 (400V)	2.4	0.18 ... 2.4	2.4	HF2.4-ROLE-24VDC	1SAT126000R1011	0.270
6.5	3.00 (400V)	9.0	1.5 ... 9.0	6.5	HF9-ROLE-24VDC	1SAT146000R1011	0.289

Main dimensions mm, inches

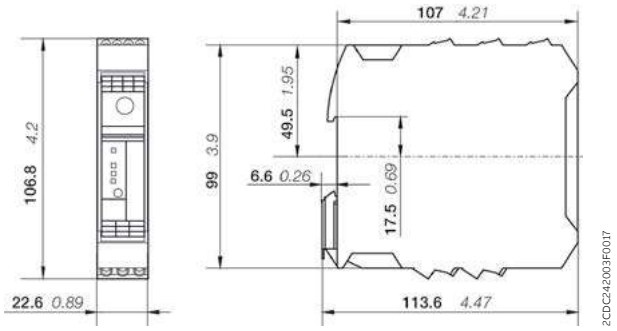

HF0.6, HF2.4, HF9

HF0.6, HF2.4, HF9 electronic compact starters

Technical data

Main circuit – Utilization characteristics according to IEC/EN

Type		HF-DOL/ROL	HF-DOLE/ROLE	HF-R
Standards		IEC/EN 60947-1, IEC/EN 60947-4-2	IEC/EN 60947-1, IEC/EN 60947-4-2, IEC/ EN 61508, IS0 13849	IEC/EN 60947-1, IEC/EN 60947-4-2
Rated operational voltage Ue		500 V AC		
Operational voltage	Minimum	42 V AC,		
	Maximum	550 V AC		
Setting range		see ordering details		
Rated frequency		50/60 Hz		
Trip class		10A		
Number of poles		3		
Number of protected poles		3		
Mechanical durability		10000 cycles		
Electrical durability		30 Mio. cycles		
Rated impulse withstand voltage Uimp		6 kV		
Rated insulation voltage Ui		500 V		
Rated operational current Ie AC-51		see ordering details		
Rated operational current Ie AC-53a		see ordering details		
Rated uninterrupted current Iu		see ordering details, Rated operational current Ie		
Overvoltage category		III		
Delay time	Off, minimum, switched off with pushbutton	1 s	1 s	-
	Off, maximum, switched off with pushbutton	3 s	3 s	-
	Off, typical, switched off via control input voltage	30 ms	30 ms	30 ms
	Off, maximum, switched off via control input voltage	-	HF0.6, HF2.4: 60 ms HF9: 80 ms	-
	Off, typical, switched off via supply voltage	25 ms	25 ms	25 ms
	Off, maximum, switched off via supply voltage	-	500 ms	-
Switch off time	By phase failure	1.8 s	1.8 s	-
	By phase asymmetry at 33%	120 s	120 s	-
	By phase asymmetry at 67%	1.8 s	1.8 s	-
Overspeed tripping	Operating threshold	HF9-DOL/ROL/DOLE/ROLE: >45 A		
	Response time	HF9-DOL/ROL/DOLE/ROLE: 2 s		
Power loss	Minimum	1.1 W		
	Maximum	HF0.6: 1.5 W HF2.4: 3.3 W HF9: 14.6 W		
Switching frequency		≤ 2 Hz; 120 starts/min; 7200 starts/h		
Overvoltage category		III		

Short circuit protection with MO132 for single mounting, IEC Type 1, 500 V AC, 35 kA, 50 Hz, AC-53a, EN/IEC 60947-4-2

Rated motor power	Rated motor current	Starter Type	Protection type	HF-Starter	Current setting range of HF-Starter	Max. allowed setting current for AC-53a
kW	A				A	A
0.18	0.48	DOL, ROL, DOLE, ROLE (1)	MO132-0.63	HF0.6	0.075 - 0.6	0.6
1.1	2.2	DOL, ROL, DOLE, ROLE (1)	MO132-2.5	HF2.4	0.18 - 2.4	2.4
3.0	5.2	DOL, ROL, DOLE, ROLE, R (1)	MO132-6.3	HF9	1.5 - 9 (1)	6.5

(1) HF9 is able to switch 9A in AC-51, 6.5A in AC-53a.

Short circuit protection with MO132 for single mounting, IEC Type 1, 415 V AC, 70 kA, 50 Hz, AC-53a, EN/IEC 60947-4-2

Rated motor power	Rated motor current	Starter Type	Protection type	HF-Starter	Current setting range of HF-Starter	Max. allowed setting current for AC-53a
kW	A				A	A
0.18	0.58	DOL, ROL, DOLE, ROLE (1)	MO132-0.63	HF0.6	0.075 - 0.6	0.6
0.75	1.8	DOL, ROL, DOLE, ROLE (1)	MO132-2.5	HF2.4	0.18 - 2.4	2.4
3.0	6.3	DOL, ROL, DOLE, ROLE, R (1)	MO132-6.3	HF9	1.5 - 9 (1)	6.5

(1) HF9 is able to switch 9A in AC-51, 6.5A in AC-53a

HF0.6, HF2.4, HF9 electronic compact starters

Technical data

Short circuit protection with MO132 for group mounting, IEC Type 1, 500 V AC, EN/IEC 60947-4-2

Max. sum of current of HF-Starter in group	Iq kA	HF-Starter Type	SCPD A
6.5	35	DOL, ROL, DOLE, ROLE, R (1)	MO132-6.3
10	3		MO132-10
12	3		MO132-12
16	3		MO132-16
20	3		MO132-20
25	3		MO132-25
32	3		MO132-32

(1) HF9 is able to switch 9A in AC-51, 6.5A in AC-53a

Short circuit protection with MO132 for group mounting, IEC Type 1, 415 V AC, EN/IEC 60947-4-2

Max. sum of current of HF-Starter in group	Iq kA	HF-Starter Type	SCPD A
6.5	70	DOL, ROL, DOLE, ROLE, R (1)	MO132-6.3
10	35		MO132-10
12	3		MO132-12
16	3		MO132-16
20	3		MO132-20
25	3		MO132-25
32	3		MO132-32

(1) HF9 is able to switch 9A in AC-51, 6.5A in AC-53a

Single mounting fused design, IEC Type 1, 500 V AC, 35 kA, 50 Hz, AC-53a, EN/IEC 60947-4-2

Rated motor power kW	Rated motor current A	Starter Type	Protection type	HF-Starter	Current setting range of HF-Starter A	Max. allowed setting current for AC-53a A
0.18	0.48	DOL, ROL, DOLE, ROLE (1)	Fuse 25A gG	HF0.6	0.075 - 0.6	0.6
1.1	2.2	DOL, ROL, DOLE, ROLE (1)	Fuse 25A gG	HF2.4	0.18 - 2.4	2.4
3.0	5.2	DOL, ROL, DOLE, ROLE, R (1)	Fuse 25A gG	HF9	1.5 - 91)	6.5

(1) HF9 variants can switch 6.5A in utilization category AC-53a and 9A in AC-51.

Single mounting fused design, IEC Type 1, 415 V AC, 50 kA, 50 Hz, AC-53a, EN/IEC 60947-4-2

Rated motor power kW	Rated motor current A	Starter Type	Protection type	HF-Starter	Current setting range of HF-Starter A	Max. allowed setting current for AC-53a A
0.18	0.58	DOL, ROL, DOLE, ROLE (1)	Fuse 25A gG	HF0.6	0.075 - 0.6	0.6
0.75	1.8	DOL, ROL, DOLE, ROLE (1)	Fuse 25A gG	HF2.4	0.18 - 2.4	2.4
3.0	6.3	DOL, ROL, DOLE, ROLE, R (1)	Fuse 25A gG	HF9	1.5 - 91)	6.5

(1) HF9 variants can switch 6.5A in utilization category AC-53a and 9A in AC-51.

Group mounting fused design, IEC Type 1, 500 V AC, 35 kA, 50 Hz, AC-53a, EN/IEC 60947-4-2

Iq kA	SCPD	Max. sum of current of used devices A	HF-Starter
35	Fuse 25A gG	25	HF0.6
35	Fuse 25A gG	25	HF2.4
35	Fuse 25A gG	25	HF9

Group mounting fused design, IEC Type 1, 415 V AC, 50 kA, 50 Hz, AC-53a, EN/IEC 60947-4-2

Iq kA	SCPD	Max. sum of current of used devices A	HF-Starter
50	Fuse 25A gG	25	HF0.6
50	Fuse 25A gG	25	HF2.4
50	Fuse 25A gG	25	HF9

HF0.6, HF2.4, HF9 electronic compact starters
Technical data

Main circuit – Utilization characteristics according to UL/CSA

Type		HF
Standards		UL 60947-1; UL 60947-4-2
Rated operational voltage		500 V AC
Operational voltage	Minimum	42 V AC
	Maximum	550 V AC
Ampere Rating UL/CSA		see ordering details, Full load amps motor use
Horse power rating	Nominal switching performance full load (power factor = 0.4)	HF0.6: 0.4 hp HF2.4: 1.2 hp HF9: 3.0 hp
	Nominal switching performance full load (power factor = 0.8)	HF0.6: 0.6 hp HF2.4: 2.2 hp HF9: 6.1 hp
Full loads Amps (FLA)		see ordering details
Short-circuit current rating (SCCR) (500 V AC, 30 A Class J or CC)		100 kA

General technical data

Type		HF
Utilization category		AC51, AC53a
Pollution degree		2
Phase loss sensitive		Yes
Ambient air temperature	Operation	-25 ... + 70 °C
	Operation compensated	-40 ... + 80 °C
Mounting position		Position 1, load side bottom
Mounting in DIN Rail		TH35-15 (35 x 15 mm Mounting Rail) acc. to IEC 60715, TH35-7.5 (35 x 7.5 mm Mounting Rail) acc. to IEC 60715
Degree of protection	Housing	IP20
	Main circuit terminals	IP20

Control circuit

Type		HF
Rated control circuit voltage Uc		24 V DC
Input voltage Uin	Switching Threshold at Signal <0>	-3 ... 9.6 V
	Switching Threshold at Signal <1>	19.2 ... 30 V
Input current Ic		3 mA

Supply circuit

Type	HF
Rated control supply voltage Us	24 V DC
Control supply voltage	19.2 ... 30 V DC
Rated control supply current Is	0.04 A

Single and group mounting HF-Starter, Type 1 coordination with fuse class J or CC according to UL60947-1/-4-1

HF-Starter	FLA A / V AC	Iq kA	SCPD	Max. current A	Max. Voltage V AC
HF0.6	0.6 / 500	100	Fuse class J or CC	30	480
HF2.4	2.4 / 500	100	Fuse class J or CC	30	480
HF9	6.5 / 500	100	Fuse class J or CC	30	480

Single and group mounting HF-Starter, Type 1 coordination with fuse RK 5 according to UL60947-1/-4-1

HF-Starter	FLA A / V AC	Iq kA	SCPD	Max. current A	Max. Voltage V AC
HF0.6	0.6 / 500	5	Fuse RK 5	20	480
HF2.4	2.4 / 500	5	Fuse RK 5	20	480
HF9	6.5 / 500	5	Fuse RK 5	20	480

HF0.6, HF2.4, HF9 electronic compact starters

Technical data

Safety related data

Type		HF-DOLE/ROLE
Standards		IEC/EN 60947-1, IEC/EN 60947-4-2, IEC/EN 61508, IS0 13849
Safe shut down	for ambient temperature 40°C ... 60°C	
Safety integrity level acc. to	IEC 61508-1	SIL 3
Performance level		Up to e
Mean time to failure (MTTF) acc. to IEC60050-191-12-07		DOLE: 43 years ROLE: 39.3 years
Mean time to dangerous failure, motor protection		447 years
Mean time to dangerous failure, safe shutdown		DOLE: 518 years ROLE: 517 years
Failure in time	Safe, detectabled λ_{sd}	DOLE: 543 FIT ROLE: 664 FIT
	Safe, undetectable λ_{su}	DOLE: 852 FIT ROLE: 968 FIT
	Dangerous, detectable λ_{dd}	218 FIT
	Dangerous, undetectable λ_{du}	DOLE: 2.4 FIT ROLE: 2.67 FIT
Safe failure fraction (SFF)		DOLE: 99.85% ROLE: 99.86%
Diagnostic coverage (DC)		DOLE: 98.91% ROLE: 98.79%
Probability of dangerous failure per hour (PFH)		DOLE: 2.4 ROLE: 2.67
Motor overload protection	for ambient temperature 40°C ... 60°C	
Safety integrity level acc. to	IEC 61508-1	SIL 3
Performance level		Up to e
Mean time to failure (MTTF) acc. to IEC60050-191-12-07		DOLE: 43 years ROLE: 39.3 years
Mean time to dangerous failure, safe shutdown		DOLE: 518 years ROLE: 517 years
Failure in time	Safe, detectabled	DOLE: 517 FIT ROLE: 637 FIT
	Safe, undetectable	DOLE: 809 FIT ROLE: 870 FIT
	Dangerous, detectable	239 FIT
	Dangerous, undetectable	17 FIT
Safe failure fraction (SFF)		DOLE: 98.92% ROLE: 99.03%
Diagnostic coverage		DOLE: 98.91w ROLE: 98.79%

HF0.6, HF2.4, HF9 electronic compact starters

Technical data

Connecting characteristics

Main circuit		
Type		HF
Connecting capacity		
Rigid	1 x	2 … 2.5 mm²
Flexible	1 x	2 … 2.5 mm²
Flexible with ferrule	1 x	2 … 2.5 mm²
Connecting capacity acc. to UL/CSA		
Rigid	1 x	24 … 14 AWG
Flexible	1 x	24 … 14 AWG
Flexible with ferrule	1 x	24 … 14 AWG
Stripping length		8 mm
Tightening torque		0.5 … 0.6 N·m
Tightening torque UL/CSA		5 … 7 in·lb
Terminal type		Screw terminals
Recommended screw driver		M3

Control circuit		
Type		HF
Connecting capacity		
Rigid	1 x	2 … 2.5 mm²
Flexible	1 x	2 … 2.5 mm²
Flexible with ferrule	1 x	2 … 2.5 mm²
Connecting capacity acc. to UL/CSA		
Rigid	1 x	24 … 14 AWG
Flexible	1 x	24 … 14 AWG
Flexible with ferrule	1 x	24 … 14 AWG
Stripping length		8 mm
Tightening torque		0.5 … 0.6 N·m
Tightening torque UL/CSA		5 … 7 in·lb
Terminal type		Screw terminals
Recommended screw driver		M3

HF0.6, HF2.4, HF9 electronic compact starters

Technical diagrams

Derating curve

Please consider the derating curves for group mounting with and without ≥22.5 mm distance and the overload protection for tripping class 10A.

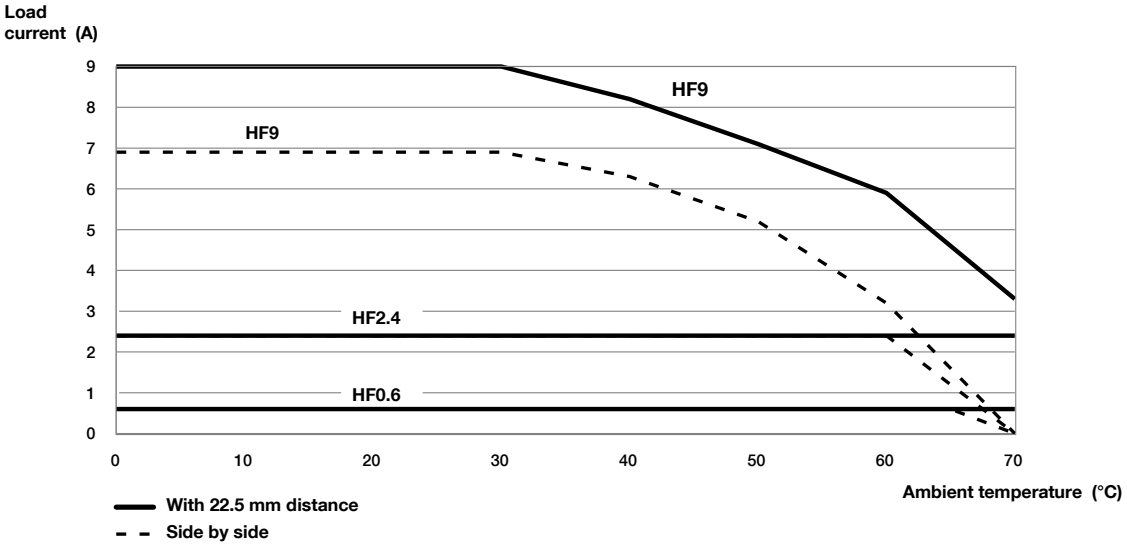

Derating curve HF range - electronic compact starters

Tripping characteristics

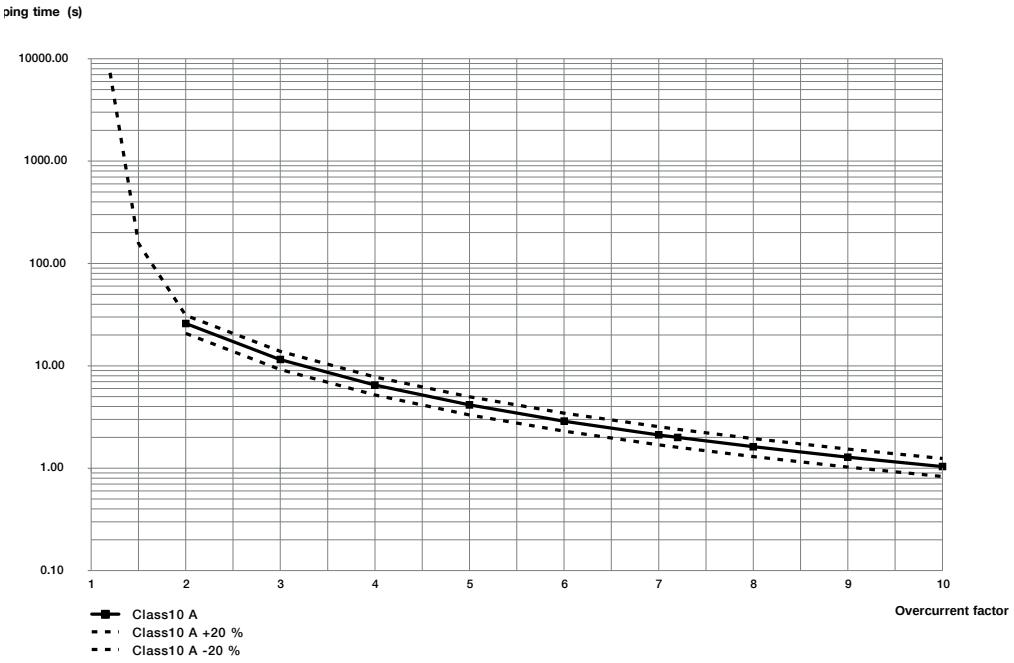

Tripping characteristics class 10A HF range - electronic compact starters

Note
We reserve the right to make technical changes or modify the contents of this document without prior notice. With regard to purchase orders, the agreed particulars shall prevail. ABB does not accept any responsibility whatsoever for potential errors or possible lack of information in this document.

We reserve all rights in this document and in the subject matter and illustrations contained therein. Any reproduction, disclosure to third parties or utilization of its contents – in whole or in parts – is forbidden without prior written consent of ABB.

ABB Electrification Sweden AB
SE-721 32 Västerås
Tel. +46 (0) 21-32 50 00
abb.com/lowvoltage

2TLC010001C0202 revH2 May 2022

Copyright© 2022 ABB Electrification Sweden AB
All rights reserved