DX2032

Multifunction display for monitoring revolution, speed and time

DISPLAY/FX460/ANALOG/DC

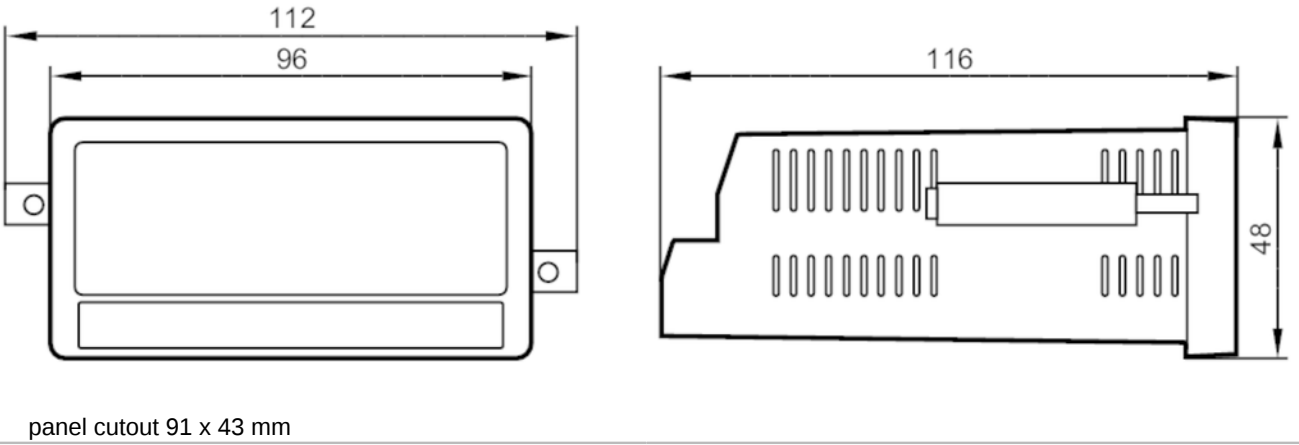

panel cutout 91 x 43 mm

Product characteristics		
Housing		housing for panel mounting
Dimensions	[mm]	48 x 112 x 116
Application		
Application		universal evaluation and display for all physical units which can be derived from pulse sequences
Electrical data		
Operating voltage	[V]	18...30 DC
Current consumption	[mA]	100
Inputs / outputs		
Number of inputs and outputs		Number of digital inputs: 2; Number of digital outputs: 4; Number of analogue outputs: 1
Inputs		
Number of digital inputs		2
Outputs		
Number of digital outputs		4
Number of analogue outputs		1
Analogue current output	[mA]	0...20
Max. load	[Ω]	270
Analogue voltage output	[V]	-10...10
Precision analogue output	[%]	0,1
Overload protection		yes
Resolution of analogue output		16 bit
Operating conditions		
Ambient temperature	[°C]	-20...60
Storage temperature	[°C]	-25...70
Protection		IP 65
Protection rating terminals		IP 20

DX2032

Multifunction display for monitoring revolution, speed and time

DISPLAY/FX460/ANALOG/DC

Tests / approvals			
EMC		EN 61000-6-2	
		EN 61000-6-3	
		EN 61000-6-4	
Mechanical data			
Weight	[g]	302.5	
Housing		housing for panel mounting	
Type of mounting		installation in panels or panel cutouts; (panel cutout: 91 x 43 mm)	
Dimensions	[mm]	48 x 112 x 116	
Materials		Noryl UL94-V-0	
Displays / operating elements			
Display		colour display	full graphic LCD display, touch screen
Electrical connection			

screw terminals:

Connection

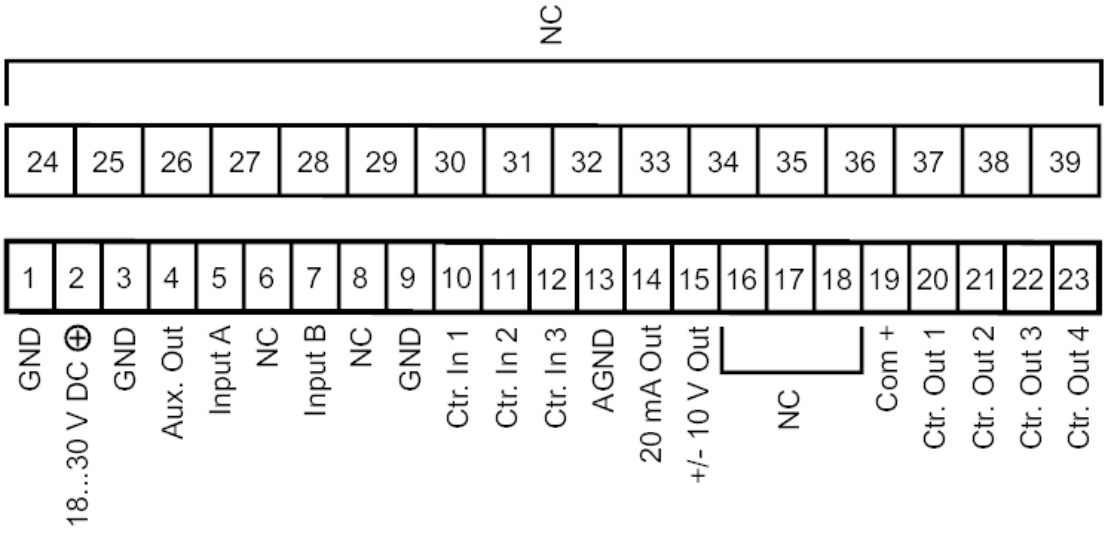

NC: not used