Brand of NTN corporation

Technical data

UKP311H

Bearing units



Grey cast housing, radial insert ball bearing with adapter sleeve,seal with slinger

KIT CONTENT

UK311G2H, P311

VISUAL (S)

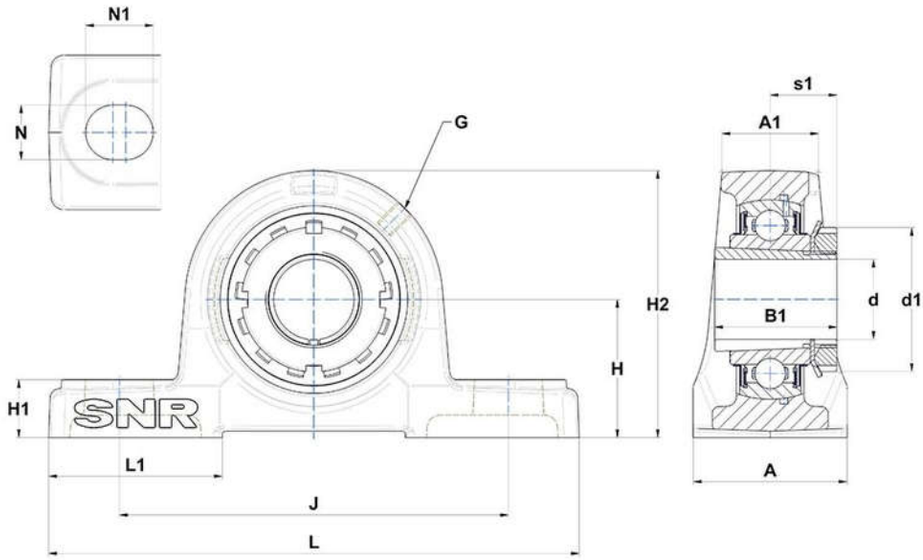

PRODUCT DEFINITION

Brand	SNR
A - Housing width	80 mm
A1 - Housing top width	51 mm
B - Width of Inner Ring	43 mm
d - Shaft diameter	50 mm
d1 - Outer dia of eccent. Lock. collar / nut of adapter sleeve	75 mm

PRODUCT DEFINITION	
G - Grease fitting	M6x1
H - Distance mounting base to centerline spheric. seating diam.	80 mm
H1 - Housing foot height	30 mm
H2 - Housing height	154 mm
J - Mounting holes distance	236 mm
L - Housing length	310 mm
L1 - Housing foot length	85 mm
N - Mounting hole dimension	20 mm
N1 - Mounting hole length	38 mm
s1 - Distance nut to middle of bearing raceway	34 mm

PRODUCT PERFORMANCE	
C - Dynamic load rating	71500000 mN
C0 - Static load rating	44800000 mN
Operating temperature min.	253,15 °K
Operating temperature max.	373,15 °K

OTHER FEATURES	
Mass	7,7 kg
Adapter sleeve designation	H2311