EVT397

Connecting cable with socket

ADOGH040VAS0002L04

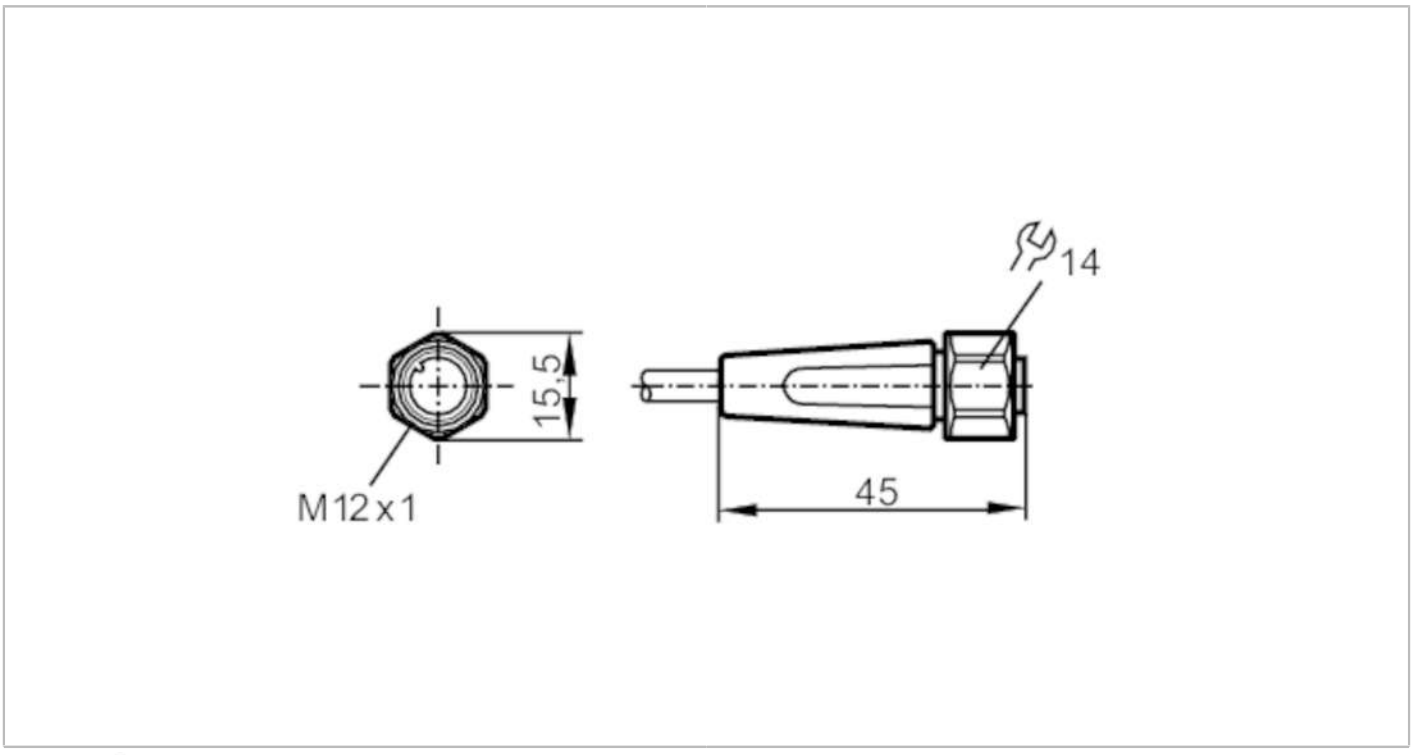

Application		
Special feature		Free from silicone; Gold-plated contacts; Screened cable; Drag chain suitability
Application		hygienic and wet areas in the food industry
Free from silicone		yes
Electrical data		
Operating voltage	[V]	< 50 AC / < 60 DC
Protection class		III
Max. current load total	[A]	4
Overall current rating (UL)	[A]	3
Operating conditions		
Ambient temperature	[°C]	-25...100
Note on ambient temperature		cULus: ...50 °C
Ambient temperature (moving)	[°C]	5...100
Note on ambient temperature (moving)		cULus: ...50 °C
Protection		IP 65; IP 67; IP 68; IP 69K
Mechanical data		
Weight	[g]	113.2
Dimensions	[mm]	15.5 x 15.5 x 45
Materials		housing: PVC orange; Sealing: EPDM
Material nut		stainless steel (1.4404 / 316L)
Drag chain suitability		yes

EVT397

Connecting cable with socket

ADOGH040VAS0002L04

Drag chain suitability	bending radius for flexible use	min. 10 x cable diameter
	travel speed	max. 3.3 m/s for a horizontal travel length of 5 m and max. acceleration of 5 m/s²
	bending cycles	> 1 Mio.
	torsional strain	± 180 °/m

Remarks

Pack quantity	1 pcs.

Electrical connection

Cable: 2 m, PVC, orange, Ø 5.2 mm, shielded; 4 x 0.34 mm² (42 x Ø 0.1 mm)

Electrical connection - socket

Connector: 1 x M12, straight; coding: A; Locking: stainless steel (1.4404 / 316L); Contacts: gold-plated; Tightening torque: 0.6...1.5 Nm; Shielded connection cable: screen connected



Connection

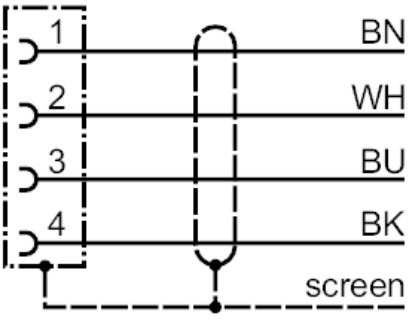

	Core colours :
BK =	black
BN =	brown
BU =	blue
WH =	white

EVT397

Connecting cable with socket

ADOGH040VAS0002L04

Diagrams and graphs

Shielding characteristics

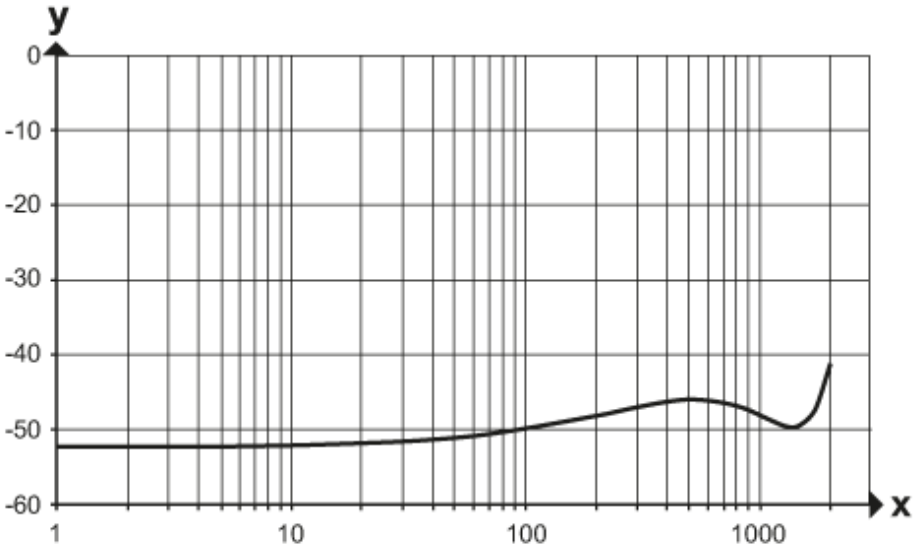

x frequency (MHz)

y Shielding characteristics (dB)
according to DIN EN 60512-23-3