**Product Data Sheet** **8315100206**
VWCF119DSGLS
AxiACi120-00206

ebmpapst

engineering a better life



**AxiACi120-00206**

**INDEX**

**1 General ..... 3**
**2 Mechanics ..... 3**
2.1 General ..... 3
2.2 Connections ..... 3
**3 Operating Data ..... 4**
3.1 Electrical Interface - Input ..... 4
3.2 Electrical Operating Data ..... 4
3.3 Electrical Features ..... 5
3.4 Aerodynamics ..... 6
3.5 Sound Data ..... 7
**4 Environment ..... 8**
4.1 General ..... 8
4.2 Climatic Requirements ..... 8
**5 Safety ..... 9**
5.1 Electrical Safety ..... 9
5.2 Approval Tests ..... 9
**6 Reliability ..... 10**
6.1 General ..... 10

## 1 General

| | |
|---|---|
| Fan type | Axial |
| Rotating direction looking at rotor | Clockwise |
| Airflow direction | Air outlet over struts |
| Bearing system | Ball bearing |
| Mounting position - shaft | Any |

## 2 Mechanics

### 2.1 General

| | | |
|---|---|---|
| Width | 120,0 mm | |
| Height | 120,0 mm | |
| Depth | 38,0 mm | |
| Diameter | 0,0 mm | |
| Mass | 0,235 kg | |
| Housing material | Plastic | |
| Impeller material | Plastic | |
| Max. torque when mounted across both mounting flanges<br>Screw size | Wire outlet corner: 50 Ncm<br>Remaining corners: 80 Ncm<br>ISO 4762 - M4 degreased, without an additional brace and without washer | |
| Rotor protrusion max. | 0,6 mm | |

### 2.2 Connections

| | | |
|---|---|---|
| Electrical connection | Plug | |
| Lead wire length<br>Tolerance | L = 0 mm | |
| Tube length<br>Tolerance | See drawing | |
| Wire size (AWG) | | |
| Insulation diameter | | |
| Plug | See drawing | |
| Contact | See drawing | |



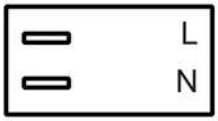


## 3 Operating Data

### 3.1 Electrical Interface - Input

| |
|---|
| External voltage supply for input and output signals must be SELV conform. |

| | |
|---|---|
| Control input | None |

**Features**

### 3.2 Electrical Operating Data

| Features | Condition | Symbol | Values | | | |
|---|---|---|---|---|---|---|
| Voltage range<br>Tolerance | | U | 100 V<br>-10,0 % | | | 240 V<br>10,0 % |
| Nominal voltage | | $U_N$ | | 115 V | 230 V | |
| Frequency | | f | 50 Hz / 60 Hz | | | |
| Power consumption<br>Tolerance | Δp = 0 | P | 4,4 W<br>+- 20 % | | | |
| Current consumption<br>Tolerance | Δp = 0 | $I_{RMS}$ | 68 mA<br>+- 20 % | 62 mA<br>+- 20 % | 34 mA<br>+- 20 % | 32 mA<br>+- 20 % |
| Speed<br><br>Tolerance | Δp = 0 | n | 3.300 1/min<br>+- 10 % | | | |

### 3.3 Electrical Features

| | | |
|---|---|---|
| Electronic function | Speed-Controlled | |
| Locked rotor protection | Auto restart | |

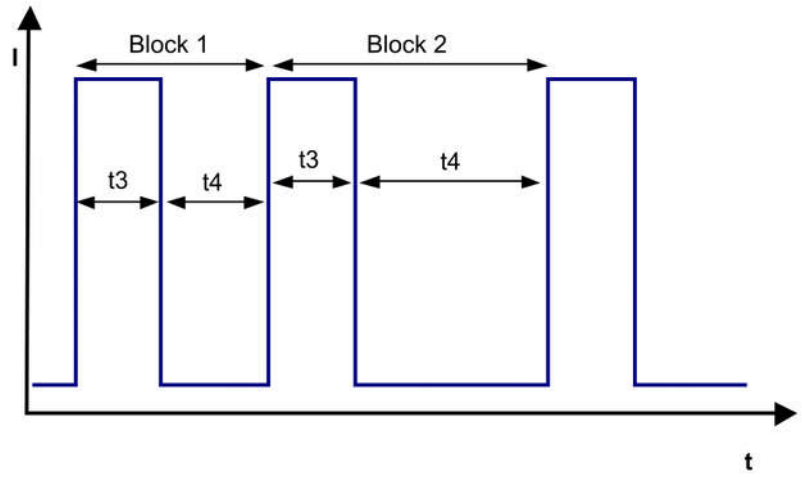

### 3.4 Aerodynamics

Measurement conditions:

Measured with a double chamber intake rig acc. to DIN EN ISO 5801.
Normal air density = 1,2 kg/m3; Temperature 23°C +/- 3°C;
In the intake and outlet area should not be any solid obstruction within 0,5 m. Motor shaft horizontal.
The information is only valid under the specified test conditions and may be changed by the installation conditions. If there are deviations from the standard test conditions, the characteristic values must be checked under the installed conditions. Power consumption of the fan motor when operating at normal voltage is shown. Depending on the operating conditions of the application, the power input may be higher.

a) Operation condition:
3.300 1/min at free air flow Frequency: 50 Hz Nominal voltage: 230 V

| | |
|---|---|
| Max. free-air flow (Δp = 0 / V̇ = max.) | 172 m3/h |
| Max. static pressure (Δp = max. / V̇ =0) | 92 Pa |

b) Operation condition:
3.300 1/min at free air flow Frequency: 60 Hz Nominal voltage: 115 V

| | |
|---|---|
| Max. free-air flow (Δp = 0 / V̇ = max.) | 172 m3/h |
| Max. static pressure (Δp = max. / V̇ =0) | 92 Pa |

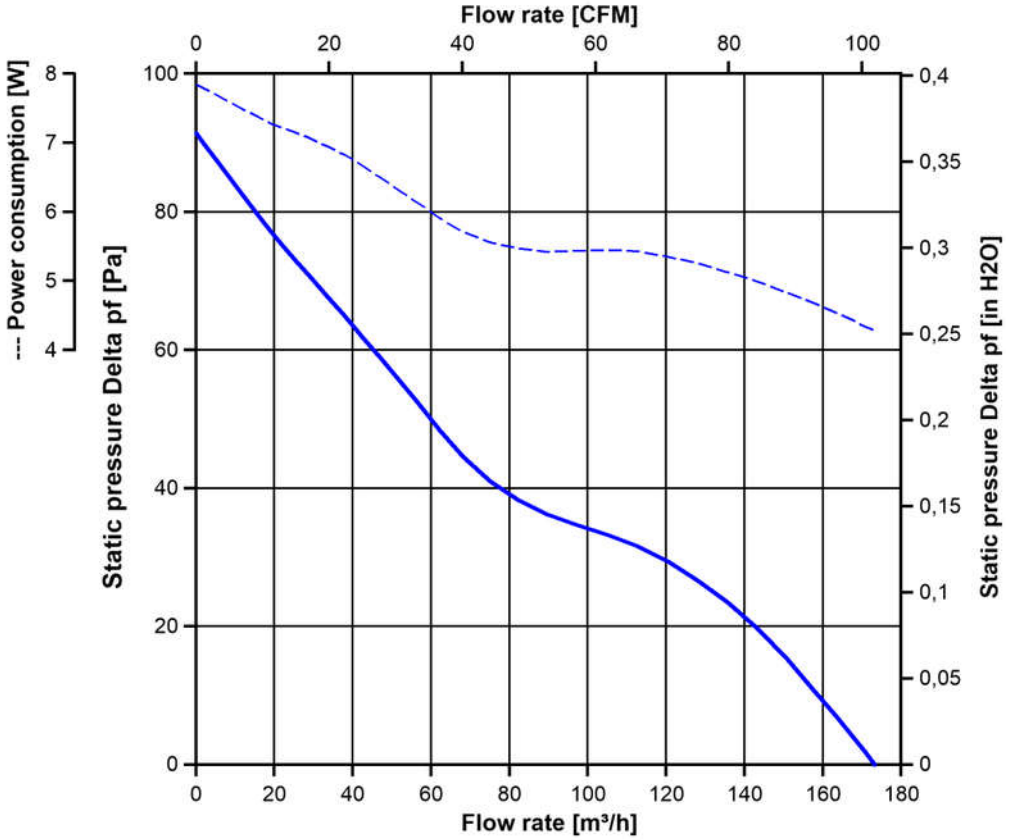

### 3.5 Sound Data

| | |
|---|---|
| Measurement conditions: | Sound pressure level: 1 meter distance between microphone and the air intake.<br>Sound power level: According to DIN 45635 Part 38 (ISO 10302)<br>Measured in a semianechoic chamber with a background noise level of Lp(A) < 5 dB(A)<br>For further measurement conditions see chapter aerodynamics. |

a) Operation condition:
3.300 1/min at free air flow Frequency: 50 Hz Nominal voltage: 230 V

| | | |
|---|---|---|
| Optimal operating point | 138 m3/h @ 23 Pa | |
| Sound power level at the optimal operating point | 5,3 bel(A) | |
| Sound pressure level at free air flow, measured in rubber bands | 42 dB(A) | |

b) Operation condition:
3.300 1/min at free air flow Frequency: 60 Hz Nominal voltage: 115 V

| | | |
|---|---|---|
| Optimal operating point | 138 m3/h @ 23 Pa | |
| Sound power level at the optimal operating point | 5,3 bel(A) | |
| Sound pressure level at free air flow, measured in rubber bands | 42 dB(A) | |

## 4 Environment

### 4.1 General

| | | |
|---|---|---|
| Min. permitted ambient temperature TU min. | -40 °C | |
| Max. permitted ambient temperature TU max. | 70 °C | |
| Min. permitted storage temperature TL min. | -40 °C | |
| Max. permitted storage temperature TL max. | 80 °C | |

### 4.2 Climatic Requirements

| | | |
|---|---|---|
| Humidity requirements | humid heat, cyclic; according to DIN EN 60068-2-30, 6 cycle | |
| Water exposure | None | |
| Dust requirements | Dust check; according to DIN EN 60068-2-68, 6g/m2d, 1 day | |
| Salt fog requirements | None | |

Permitted application area:
The product is for the use in sheltered rooms with limited controlled temperature. Occasionally condensed water is allowed. Direct exposure to water must be avoided. Saline ambient conditions must be avoided.

Pollution degree 2 (according DIN EN 60664-1)
It occurs only non-conductive pollution. Occassionally, temporary conductivity caused by condensation occurs.

## 5 Safety

### 5.1 Electrical Safety

| |
|---|
| A verification of thermal conditions (normal and abnormal operation) as well as the protection against electric shock, ingress of solid foreign objects and water has to be done in conjuction with the appliance. |

| | |
|---|---|
| Test voltage HV type test | 3000 V |
| Unit test voltage | VAC |
| Time type test HV | 1 s |
| Insulation resistance | RI > 10 MOhm |
| Protection class | built-in fan |

### 5.2 Approval Tests

| | | |
|---|---|---|
| CE | EC Declaration of Conformity | Yes |
| EAC | Eurasian Conformity | Yes |
| UL | Underwriters Laboratories | Yes / UL507, Electric Fans E38324 |
| VDE | Association for Electrical, Electronic and Information Technologies | Yes / Approval acc. to EN 60335 (VDE 0700) - Safety for household and similar electrical appliances |
| CSA | Canadian Standards Association | Yes / CSA audited by UL according to C22.2 No. 113 Fans and Ventilators |
| CCC | China Compulsory Certification | Yes / GB 12350 Safety Requirements for small Power Motors |

According to the guidelines on the application of Directive 2006/95/EC, chapter III: Scope of the "low voltage" directive, paragraph: Are "components" included in the scope? the following has to be applied:
However, some types of electrical devices, designed and manufactured for being uses as basic components to be incorporated into other electrical equipment, are such that their safety to a very large extent depends on how they are integrated into the final product and the overall characteristics of the final product. These basic components include electronic and certain other components.
Taking into account these objectives of the "Low Voltage" Directive, such basic components, the safety of which can only, to a very large extend, be assessed taking into account, how they are incorporated and for which a risk assessment cannot be undertaken, then they are not covered as such by the Directive. In particular, they must not be CE marked unless covered by other Community legislation that requires CE marking.

## 6 Reliability

### 6.1 General

| | | |
|---|---|---|
| Life expectancy L10 at TU = 40 °C | 65.000 h | |
| Life expectancy L10 at TU max. | 30.000 h | |
| Life expectancy L10 acc. to IPC 9591 at TU = 40 °C | 110.000 h | |

Copying of this document, and giving it others and the use or communication of the contents thereof, are forbidden without express authority. Offenders are liable to the payment of damages. All rights are reserved in the event of the grant of a patent or the registration of a utility model or design.

Refer to protection notice DIN ISO 16016 !

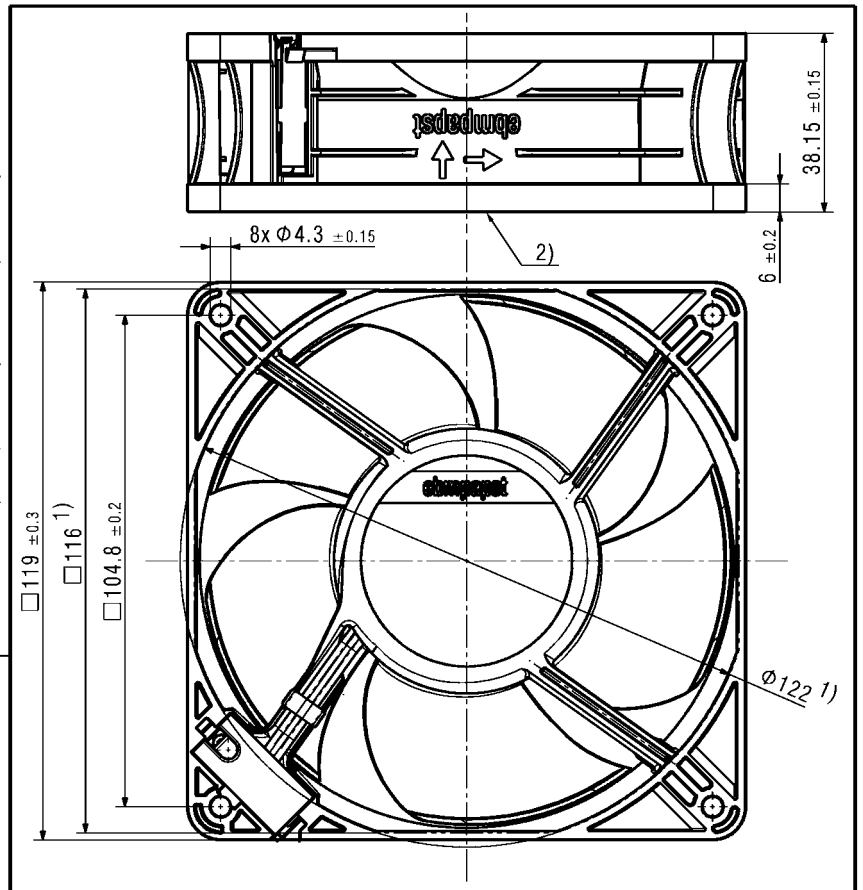


1) Maße fuer Montagewand /
dimension for worktop mounting
2) Rotorueberstand bis max. 0.6 mm zulaessig /
Rotorexcess lenght max. 0.6 mm allowable
- Kein Axialspiel bei Kugellager durch Federausgleich
no axial clearence of ball bearings conditional in a pre-load spring

| | | | | | |
|---|---|---|---|---|---|
| Title | | | | Material | Digital signature |
| First created for | Index – | Doc type | Sheet | | Change-No. |
| | Designed name | | Designed date | Volume [mm³] | CAD environment |
| Substitute for | Released name | | Released date | Mass [g] | CAD release |
| ebmpapst ebm-papst St. Georgen GmbH & Co KG | | Tolerances | | General tolerances | 3D-reference model 8315100206 CPR 000 - |
| | Scale | Format | Document status | | |