Datasheet - SRB 202CA/QT-24V

Guard door monitors and Safety control modules for Emergency Stop applications / General Purpose safety controllers (Series PROTECT SRB) / SRB 202C.



(Minor differences between the printed image and the original product may exist!)

- Two-functions safety monitoring module (double evaluation)
- 2 enabling paths with different shut-down behaviour, e.g. emergency exit opens both enabling paths (level 1); guard door monitoring only opens the second enabling path (level 2)
- Suitable for signal processing of potential-free contacts, e.g. Emergency Stop command devices (level 1), position switches with safety function, solenoid interlocks and safety sensors (level 2)
- 2 Signalling outputs
- Level 1: Reset with edge detection, Short-circuit recognition, Level 2 Opener (NC): Opener (NC) /

Ordering details

Product type description	SRB 202CA/QT-24V
Article number	1177151
EAN code	4030661307824

Approval

Approval	cULus USA/CAN

Classification

Standards	EN ISO 13849-1, IEC 61508, EN 60947-5-1
PL	bis e (STOP 0)
Control category	bis 4 (STOP 0)
DC	99% (STOP 0)
CCF	>65 points
PFH value	≤ 2,0.0 x 10^{-8}/h (STOP 0)
SIL	bis 3 (STOP 0)
Mission time	20 Years
- notice	The PFH value is applicable for the combinations listed in the table for contact load (K) (current through

	enabling paths) and switching cycle number (n-op/y). In case of 365 operating days per year and a 24-hour operation, this results in the specified switching cycle times (t-cycle) for the relay contacts. Diverging applications on request.

Global Properties

Product name	SRB 202CA/QT-24V
Standards	IEC/EN 60204-1, EN 60947-5-1, EN ISO 13849-1, IEC 61508
Compliance with the Directives (Y/N) CE	Yes
Climatic stress	EN 60068-2-78
Mounting	snaps onto standard DIN rail to EN 60715
Terminal designations	IEC/EN 60947-1
Materials	
- Material of the housings	Plastic, glass-fibre reinforced thermoplastic, ventilated
- Material of the contacts	Ag-Ni, self-cleaning, positive action
Weight	346 g
Start conditions	Automatic or Start button
Start input (Y/N)	Yes
Feedback circuit (Y/N)	Yes
Start-up test (Y/N)	No
Automatic reset function (Y/N)	Yes (Level 1)
Reset with edge detection (Y/N)	Yes (Level 1)
Pull-in delay	
- ON delay with reset button	≤ 40 ms (Level 1) ≤ 500 ms (Level 2)
Drop-out delay	
- Drop-out delay in case of emergency stop	≤ 50 ms

Mechanical data

Connection type	Screw connection
Cable section	
- Min. Cable section	0,25 mm²
- Max. Cable section	2.5 mm²
Pre-wired cable	rigid or flexible
Tightening torque for the terminals	0,6 Nm
Detachable terminals (Y/N)	Yes
Mechanical life	10.000.000 operations
Electrical lifetime	Derating curve available on request
restistance to shock	30 g / 11 ms
Resistance to vibration To EN 60068-2-6	10...55 Hz, Amplitude 0,35 mm, ± 15 %

Ambient conditions

Ambient temperature	
- Min. environmental temperature	−25 °C
- Max. environmental temperature	+45 °C
Storage and transport temperature	
- Min. Storage and transport temperature	−40 °C
- Max. Storage and transport temperature	+85 °C

Protection class	
- Protection class-Enclosure	IP40
- Protection class-Terminals	IP20
- Protection class-Clearance	IP54
Air clearances and creepage distances To IEC/EN 60664-1	
- Rated impulse withstand voltage U_{imp}	4 kV
- Overvoltage category	III To VDE 0110
- Degree of pollution	2 To VDE 0110

Electromagnetic compatibility (EMC)

EMC rating	conforming to EMC Directive

Electrical data

Rated DC voltage for controls	
- Min. rated DC voltage for controls	20.4 V
- Max. rated DC voltage for controls	28.8 V
Rated AC voltage for controls, 50 Hz	
- Min. rated AC voltage for controls, 50 Hz	-
- Max. rated AC voltage for controls, 50 Hz	-
Rated AC voltage for controls, 60 Hz	
- Min. rated AC voltage for controls, 60 Hz	-
- Max. rated AC voltage for controls, 60 Hz	-
Contact resistance	max. 100 mΩ
Power consumption	4.4 W
Type of actuation	DC
Rated operating voltage U_e	24 VDC −15% / +20%, residual ripple max. 10%
Operating current I_e	0,18 A
Electronic protection (Y/N)	Yes
Fuse rating for the operating voltage	Internal electronic trip, tripping current > 1.0 A, Reset after approximately 1 second/s
Current and tension on control circuits	
- S31, S32, S43, S44	26 VDC, Test current: 100 mA

Inputs

Monitored inputs	
- Short-circuit recognition (Y/N)	Yes (Level 1)
- Wire breakage detection (Y/N)	Yes
- Earth connection detection (Y/N)	Yes
Number of shutters	1 piece
Number of openers	3 piece
Cable length	1500 m with 1.5 mm²; 2500 m with 2.5 mm²
Conduction resistance	max. 40 Ω

Outputs

Stop category	0
Number of safety contacts	2 piece
Number of auxiliary contacts	0 piece
Number of signalling outputs	2 piece

Switching capacity	
- Switching capacity of the safety contacts	max. 230 VAC, 4 A ohmic (inductive in case of appropriate protective wiring)
- Switching capacity of the auxiliary contacts	24 VDC, 2 A
Fuse rating	
- Protection of the safety contacts	4 A slow blow
- Fuse rating for the auxiliary contacts	2 A slow blow
Utilisation category To EN 60947-5-1	AC-15: 230 V / 4 A DC-13: 24 V / 4 A
Note on the utilisation category	max. residual current 6 A
Number of undelayed semi-conductor outputs with signaling function	0 piece
Number of undelayed outputs with signaling function (with contact)	2 piece
Number of delayed semi-conductor outputs with signaling function.	0 piece
Number of delayed outputs with signalling function (with contact).	0 piece
Number of secure undelayed semi-conductor outputs with signaling function	0 piece
Number of secure, undelayed outputs with signaling function, with contact.	2 piece
Number of secure, delayed semi-conductor outputs with signaling function	0 piece
Number of secure, delayed outputs with signaling function (with contact).	0 piece

LED switching conditions display

LED switching conditions display (Y/N)	Yes
Number of LED´s	6 piece
LED switching conditions display	
- The integrated LEDs indicate the following operating states.	
- Position relay K1	
- Position relay K4	
- Position relay K3	
- Position relay K2	
- Supply voltage	
- Internal operating voltage U_i	

Miscellaneous data

Applications	 Guard system  Emergency-Stop button  Pull-wire emergency stop switches  Safety sensor

Dimensions

Dimensions	
- Width	22.5 mm
- Height	100 mm

- Depth	121 mm

notice

Inductive loads (e.g. contactors, relays, etc.) are to be suppressed by means of a suitable circuit.

notice - Wiring example

Input level: the example shows a 2-channel control of an Emergency Stop command device (level 1) with external reset button (R), and guard door monitoring (level 2) with feedback circuit (H2).

The control recognises cross-short, cable break and earth leakages in the monitoring circuit.

Relay outputs: Suitable for 2 channel control, for increase in capacity or number of contacts by means of contactors or relays with positive-guided contacts.

Automatic start:
Level 1: the automatic start is programmed by connecting the feedback circuit to the terminals X1/+24VDC.
Level 2: the automatic start is programmed by connecting the feedback circuit to the terminals X2/+24VDC.
If the feedback circuit is not required, establish a bridge

1 NC contact each time communicates the status of level 1 and level 2

The wiring diagram is shown with guard doors closed and in de-energised condition.

Documents

Operating instructions and Declaration of conformity (de) 1 MB, 24.06.2010
Code: mrl_srb202c_de

Operating instructions and Declaration of conformity (en) 1 MB, 22.02.2010
Code: mrl_srb202c_en

Operating instructions and Declaration of conformity (jp) 1 MB, 23.12.2010
Code: mrl_srb202c_jp

Operating instructions and Declaration of conformity (nl) 1 MB, 22.12.2010
Code: mrl_srb202c_nl

Operating instructions and Declaration of conformity (fr) 581 kB, 16.06.2011
Code: mrl_srb202c_fr

Wiring example (99) 21 kB, 04.08.2008
Code: ksrb2l06

Images

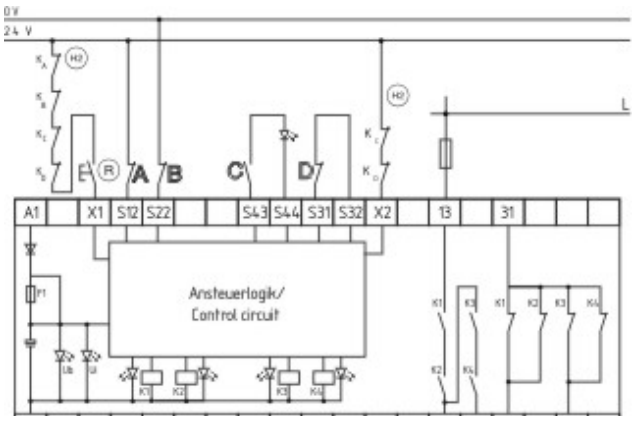

Wiring example

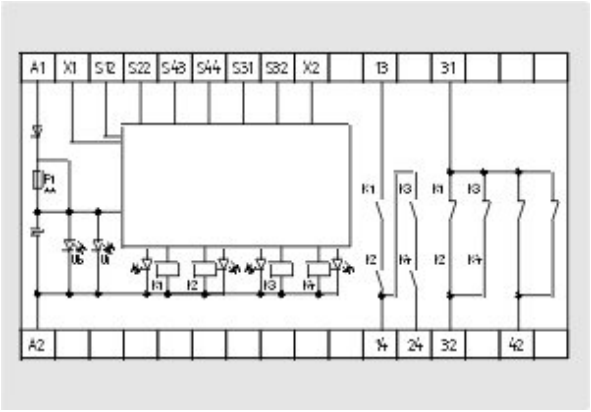

Internal wiring diagram

K.A. Schmersal GmbH, Möddinghofe 30, D-42279 Wuppertal
The data and values have been checked throroughly. Technical modifications and errors excepted.
Generiert am 28.09.2011 - 11:13:01h Kasbase 1.5.5 DBI