EKI-1221/CI/I
EKI-1222/CI/I
EKI-1224/CI/I

1-Port Modbus Gateway

2-Port Modbus Gateway

4-Port Modbus Gateway



EKI-1221 | EKI-1221CI-DE | EKI-1222 | EKI-1222CI-DE | EKI-1224

Features

- 2 x 10/100 Mbps Ethernet ports for LAN redundancy
- Integrates Modbus TCP and Modbus RTU/ASCII networks
- Supports up to 921.6 kbps and any baud rate setting
- Supports up to 16 connections per serial port under Modbus client mode and 64 sessions under Modbus servers mode
- Software-selectable RS-232/422/485-2w/485-4w communication
- Supports agent mode providing the fastest response time
- Supports Power, Ethernet and Device Redundancy
- Automatic RS-485 data flow control
- "I" models support a wide operating temperature
- "CI" models support isolation and a wide operating temperature; support line-to-line (1 kV) and line-to-ground (2 kV) surge protection

Introduction

The EKI-1200 series Modbus gateways are bi-directional gateways for integrating new and existing Modbus/RTU and Modbus/ASCII serial devices to newer TCP/IP networked-based devices. The EKI-1221/1222/1224 feature two independent Ethernet ports and MAC addresses to provide redundancy and reliability. Virtual gateway providing redundancy at the getaway level. The EKI-1221/1222/1224 allow users to select client or server operation mode for each serial port. In addition to allowing an Ethernet client to control serial servers, they also allow serial client to control Ethernet servers. EKI Modbus gateway also provides Modbus Data access via 3 different modes simultaneously, transparent mode guarantees the most up to date Modbus data, intelligent cache boots performance, when gateway is accessed by multiple Modbus TCP clients, agent Mode provides the fastest respond time. Use corresponding modes in different applications to achieve performance and availability of Modbus Data.

Specifications

Ethernet Communications

- **Compatibility** IEEE 802.3, IEEE 802.3u
- **Speed** 10/100 Mbps
- **No. of Ports** 2
- **Port Connector** 8-pin RJ45
- **Protection** Built-in 2.25 k V_{DC} magnetic isolation

Serial Communications

- **Port Type** RS-232/422/485-2w/485-4w, software selectable
  (EKI-1224CI-CE supports RS-422/485 only)
- **No. of Ports** EKI-1221: 1
  EKI-1222: 2
  EKI-1224: 4
- **Port Connector** DB9 male
  EKI-1221CI-DE; EKI-1222CI-DE also provide Terminal Block
- **Data Bits** 5, 6, 7, 8
- **Stop Bits** 1, 1.5, 2
- **Parity** None, Odd, Even, Space, Mark
- **Flow Control** XON/XOFF, RTS/CTS
- **Baud Rate** 50 bps ~ 921.6 kbps, any baud rate setting
- **Serial Signals** **[CE Version]**
  RS-232: TxD, RxD, CTS, RTS, DCD, RI, GND, DTR, DSR
  RS-422: TxD+, TxD-, RxD+, RxD-, GND
  RS-485 2-wire: Data+, Data-, GND
  RS-485 4-wire: TxD+, TxD-, RxD+, RxD- GND (not include CI models)
  [DE Version]
  DB9:
  RS-232 isolation: TxD, RxD, CTS, RTS, GND
  RS-232: TxD, RxD, CTS, RTS, DCD, RI, GND, DTR, DSR
  Terminal Block (From top to bottom):
  RS-422: GND, RxD-, RxD+, TxD+, TxDRS-
  485 2-wire: GND, NC, NC, TxD+, TxDRS-
  485 4-wire: GND, RxD-, RxD+, TxD+, TxD-
- **Protection** 15 KV ESD for RS-422/485

Software

- **OS Support** Windows XP/7/10/8.1/11, Windows Server 2016/2019/2022, and Linux
- **Utility Software** Advantech EKI Device Configuration Utility
- **Operation Modes** Modbus RTU Client/Server mode
  Modbus ASCII Client/Server mode
- **Configuration** Windows Utility, Web Browser
- **Protocols** ICMP, IP, TCP, UDP, BOOTP, DHCP, Auto IP, HTTP, DNS, SMTP, ARP, NTP, HTTPS, IPv6, SSDP
- **Authentication** RADIUS, LDAP, Local User

General

- **LED Indicators** System: Power, System Status
  LAN: Speed, Link/Active
  Serial: Tx, Rx
- **Reboot Trigger** Built-in WDT (watchdog timer)

Mechanics

- **Dimensions (W x H x D)** EKI-1221/I-CE; EKI-1221CI-DE; EKI-1222/I-CE;
  EKI-1222CI-DE: 30 x 140 x 95 mm (1.18" x 5.51" x 3.74")
  EKI-1224/CI/I-CE: 42 x 140 x 95 mm (1.65" x 5.51" x 3.74")
- **Enclosure** Metal with solid mounting hardware
- **Mounting** DIN-rail, Wall
- **Weight** EKI-1221: 0.472 Kg
  EKI-1222: 0.48 Kg
  EKI-1224: 0.555 Kg
- **IP Rating** IP30

Power Requirements

- **Power Input** 12 ~ 48 V_{DC}, redundant dual inputs
- **Power Connector** Terminal block
- **Power Consumption** EKI-1221: 3.2 W
  EKI-1222: 3.2 W
  EKI-1224: 4.1 W

Environment

- **Operating Temperature** EKI-1221/EKI-1222/EKI-1224: -10 ~ 60 °C (14 ~ 140 °F)
  'CI & I' models: -40 ~ 80 °C (-40 ~ 176 °F)
- **Storage Temperature** -40 ~ 85 °C (-40 ~ 185 °F)
- **Operating Humidity** 10 ~ 95% RH

Regulatory Approvals

- **EMC** CE, FCC Part 15 Subpart B (Class A)
- **Hazardous location** UL/cUL (Class I, Division 2, Groups A, B, C and D),
  ATEX (Zone 2 Ex nA nC IIC T4 Gc)

Port to Port Isolation ('CI' models)

- **Serial to Ethernet** 2 kV
- **Serial to Power** 2 kV
- **Ethernet to Power** 1.5 kV

All product specifications are subject to change without notice.

Last updated: 26-Jun-2025

Dimensions

Unit: mm

EKI-1221

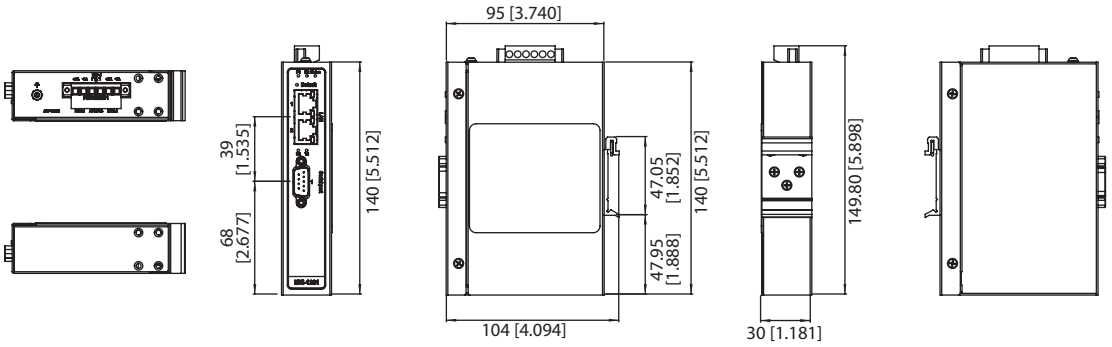

Panel Cut-out Dimensions: 95 x 140 x 30 mm (3.74" x 5.512" x 1.181")

EKI-1221CI-DE

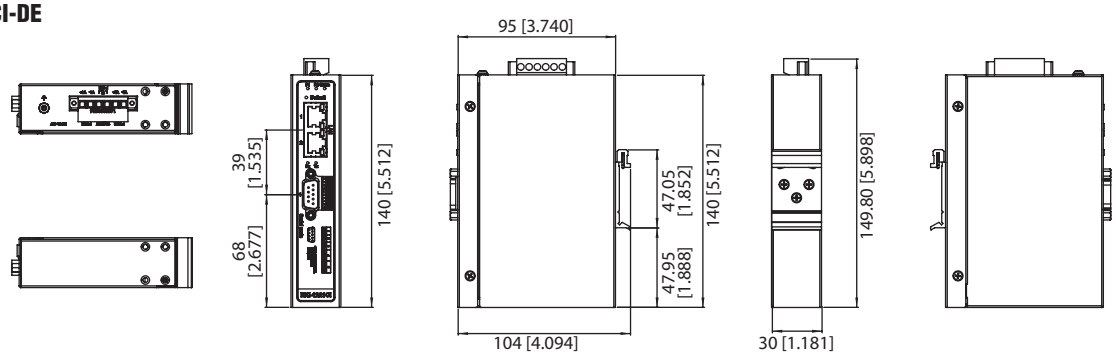

Panel Cut-out Dimensions: 95 x 140 x 30 mm (3.74" x 5.512" x 1.181")

EKI-1222

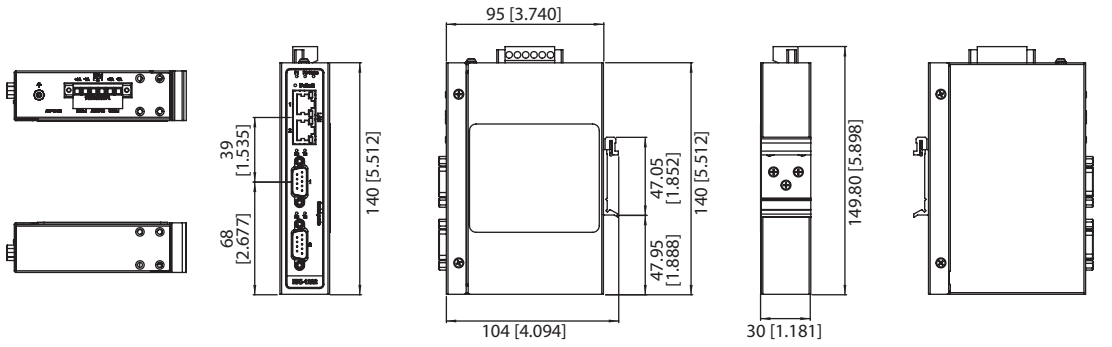

Panel Cut-out Dimensions: 95 x 140 x 30 mm (3.74" x 5.512" x 1.181")

Dimensions

Unit: mm

EKI-1222CI-DE

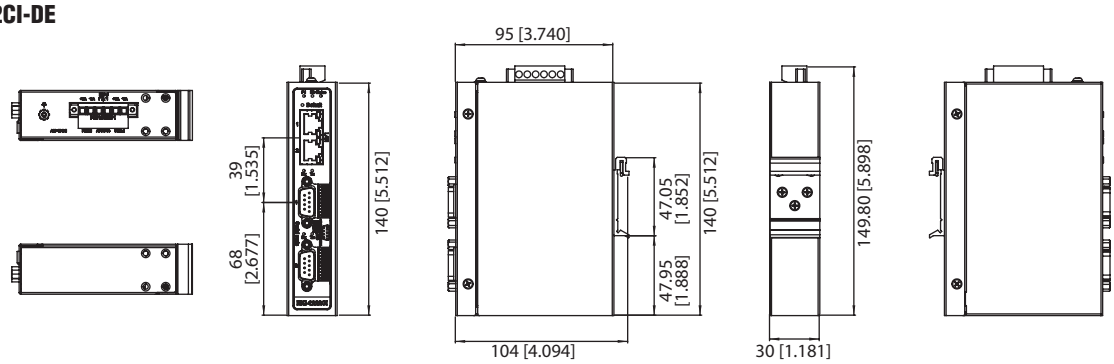

Panel Cut-out Dimensions: 95 x 140 x 30 mm (3.74" x 5.512" x 1.181")

EKI-1224

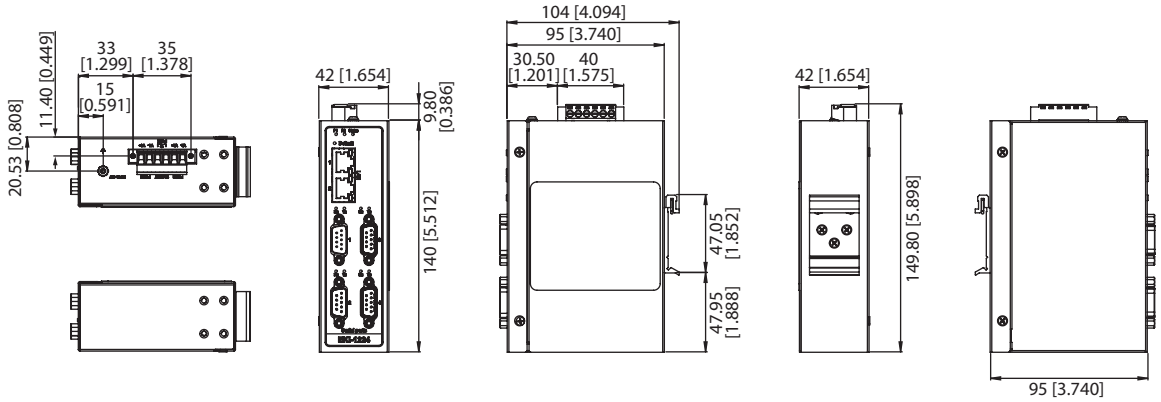

Panel Cut-out Dimensions: 95 x 140 x 42 mm (3.74" x 5.512" x 1.654")

Ordering Information

- **EKI-1221-CE** 1-port RS-232/422/485 Modbus Gateway
- **EKI-1222-CE** 2-port RS-232/422/485 Modbus Gateway
- **EKI-1224-CE** 4-port RS-232/422/485 Modbus Gateway
- **EKI-1221I-CE** 1-port RS-232/422/485 Modbus Gateway with Wide Operating Temperature
- **EKI-1222I-CE** 2-port RS-232/422/485 Modbus Gateway with Wide Operating Temperature
- **EKI-1224I-CE** 4-port RS-232/422/485 Modbus Gateway with Wide Operating Temperature
- **EKI-1221CI-DE** 1-port RS-232/422/485-2w/485-4w Modbus Gateway with Wide operation temperature and isolation
- **EKI-1222CI-DE** 2-port RS-232/422/485-2w/485-4w Modbus Gateway with Wide operation temperature and isolation
- **EKI-1224CI-CE** 4-port RS-422/485 Modbus Gateway with Wide Operation Temperature and Isolation
- **OPT1-DB9** D-Sub9 to Terminal Converter