WISKA COMBI 1010



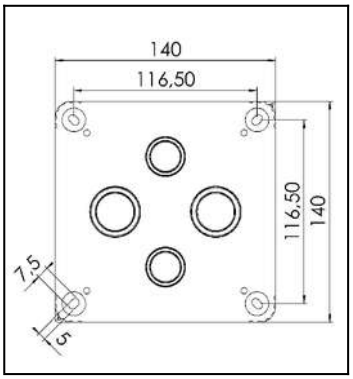

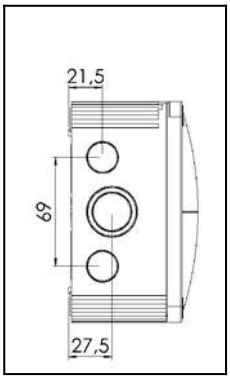

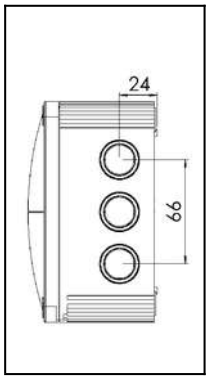

Protection class to EN 60 529:	IP 66 / 67
Flame protection:	Glow wire test 750° C acc. to EN 60695-2-11
Temperature range:	-5°C up to 60°C
Voltage:	690 V
Material:	Polypropylene, reinforced; sealing: thermoplastic elastomere
Terminals/poles:	10 mm²
Fixing:	4 internal openings outside of the sealing area
Equipment:	- 10 knockout entries at the side (5xM 25/32, 2xM 20, 3xM 20/25) - 4 knockout entries (2xM 25/32, 2xM2 0/25) in the base - 4 captive quick-release lid screws - Colour RAL 7035 light grey - .../S = black - .../W = white - Incl. self-sealing membrane screws QUIXX-EMS, 2 x M 25, 1 x M 32
Accessories:	DIN RAIL KIT 1010: Rail TS 35 + Fixing material, WISKA-No. 60363

Type	WISKA-No.			L x B x H external / außen mm
COMBI 1010/leer	10060702	2		140 x 140 x 82
COMBI 1010/leer/S	10062214	2		140 x 140 x 82
COMBI 1010/leer/W	10062210	2		140 x 140 x 82
COMBI 1010/5	10060703	2		140 x 140 x 82
COMBI 1010/5/S	10062215	2		140 x 140 x 82
COMBI 1010/5/W	10062211	2		140 x 140 x 82
DIN RAIL KIT 1010	10060363	1	—	-

© 2010 WISKA Hoppmann & Mulsow GmbH
Kisdorfer Weg 28
D-24568 Kaltenkirchen
Phone: +49 (0)4191 / 508-100
Fax: +49 (0)4191 / 508-209