FY 60 TF

Compliance with standard	ISO
Housing material	Cast iron
Sealing solution	Standard seals with additional flingers

Dimensions

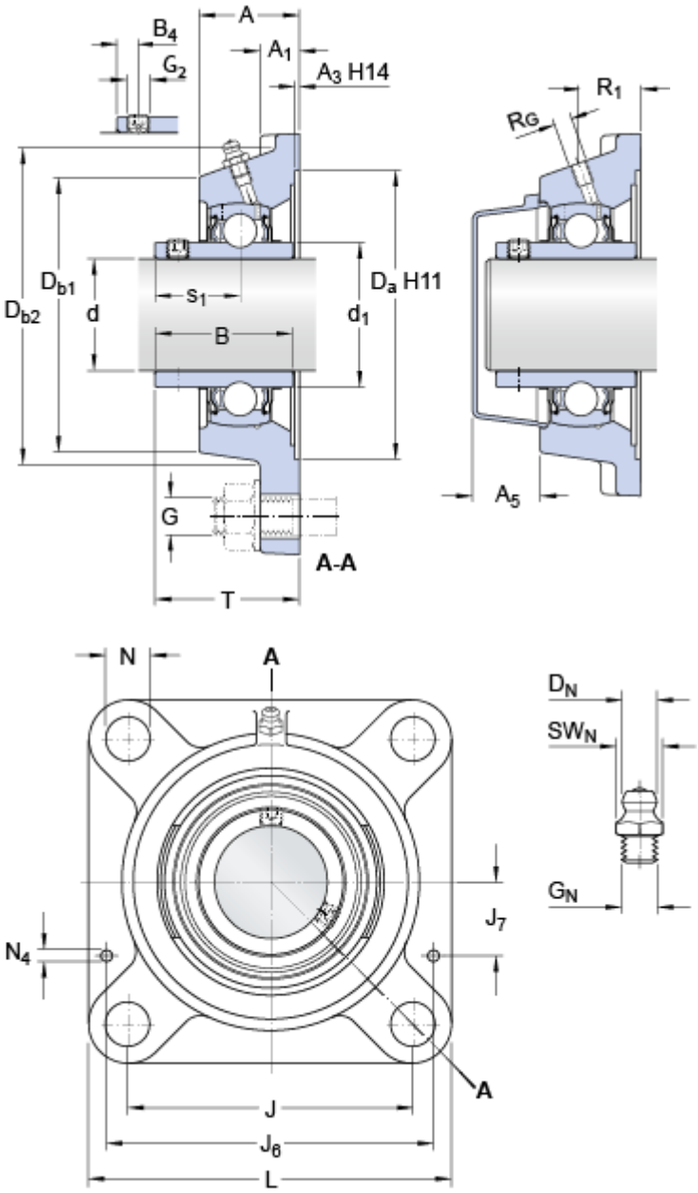

d		60	mm
d_1	≈	75.64	mm
A		52	mm
A_1		17	mm
A_3		3.2	mm
A_5		39	mm
B		65.1	mm
B_4		10	mm
D_a		161.9	mm
D_{b1}		130	mm
D_{b2}		143	mm
J		143	mm
L		175	mm
N		18	mm
s_1		39.7	mm
T		73.7	mm

Grease fitting

D_N	6.5	mm
SW_N	7	mm
G_N	1/4-28 SAE-LT	

Threaded hole

R_G	1/4-28 UNF	
R_1	34.5	mm

Dowel pins

	J_6	161	mm
	J_7	49.5	mm
	N_4	4	mm

Calculation data

Basic dynamic load rating	C	52.7	kN
Basic static load rating	C_0	36	kN
Fatigue load limit	P_u	1.53	kN
Limiting speed		3400	r/min
with shaft tolerance h6			

Mass

Mass bearing unit		3.95	kg

Mounting information

Thread grub screw	G_2	M10x1	
Hexagonal key size for grub screw	N	5	mm
Recommended tightening torque for grub screw		16.5	N·m
Recommended diameter for attachment bolts, mm	G	16	mm
Recommended diameter for attachment bolts, inch	G	0.625	in

Included products

Housing	FY 512 M
Bearing	YAR 212-2F

Associated products

End cover	ECY 212