H100B Signalling Horn

H100B compact signal authentically and reliably reproduces the alert sound of traditional electro-mechanical units.

Rated for continuous use the H100 series is a compact, high output signal suitable for a variety of installation types. In addition to the 'buzzer' type sound the unit features a further two alarm sounds.

Features

- Volume control
- Stainless steel fixings.

Approvals

- GOST-R approved. Cert: POCC GB.JB05.H00144.





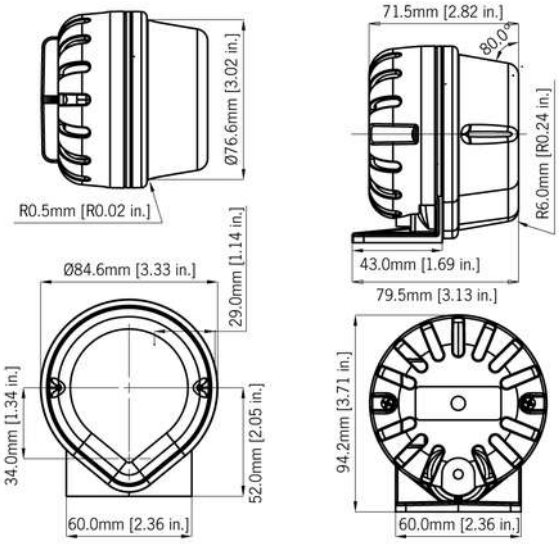

Specification

No. of tones:	3
Output:	100 dB(A) @ 1m [91dB(A) @ 10ft/3m]
Mounting:	Surface mount
Entries:	1 × 5-7mm push through grommet
Dimensions:	79.5 × 94.2mm
Ingress protection:	IP65
Housing material:	High impact ABS (UL94V0 & 5VA)
Terminals:	0.5 to 1.5mm²
Operating temp:	-25 to +50°C [-13° to +122°F]
Storage temp:	-40 to +70°C [-40° to +158°F]
Relative humidity:	90% at 20°C [68°F]
Weight:	118g/0.25lbs

*SPL data +/-3dB(A). Measured at optimum voltage.

Part Codes

_.Version:	_.Part code:
12-30V ac/dc	H100B030G
40-260V ac/dc	H100B230G

Current Consumption

Version:	Voltage:	Current:
12-30V dc/ac	12V dc	10mA
12-30V dc/ac	24V dc	24mA
40-260V dc/ac	48V dc	15mA
12-30V dc/ac	12V ac 50/60Hz	30mA
12-30V dc/ac	24V ac 50Hz	62mA
40-260V dc/ac	48V ac 50/60Hz	25mA
40-260V dc/ac	115V dc	6mA
40-260V dc/ac	230V dc	3mA
40-260V dc/ac	115V ac 50/60Hz	19mA
40-260V dc/ac	230V ac 50/60Hz	10mA

Tone table

S 1	Description
T 2	Simulated buzzer sound
T 3	1200/500Hz @ 1Hz - DIN / PFEER P.T.A.P.

No liability is accepted for any consequence of the use of this document. The technical specification of this unit is subject to change without notice due to our policy of continual product development. All dimensions are approximate. This unit is sold subject to our standard conditions of sale, a copy of which is available on request.