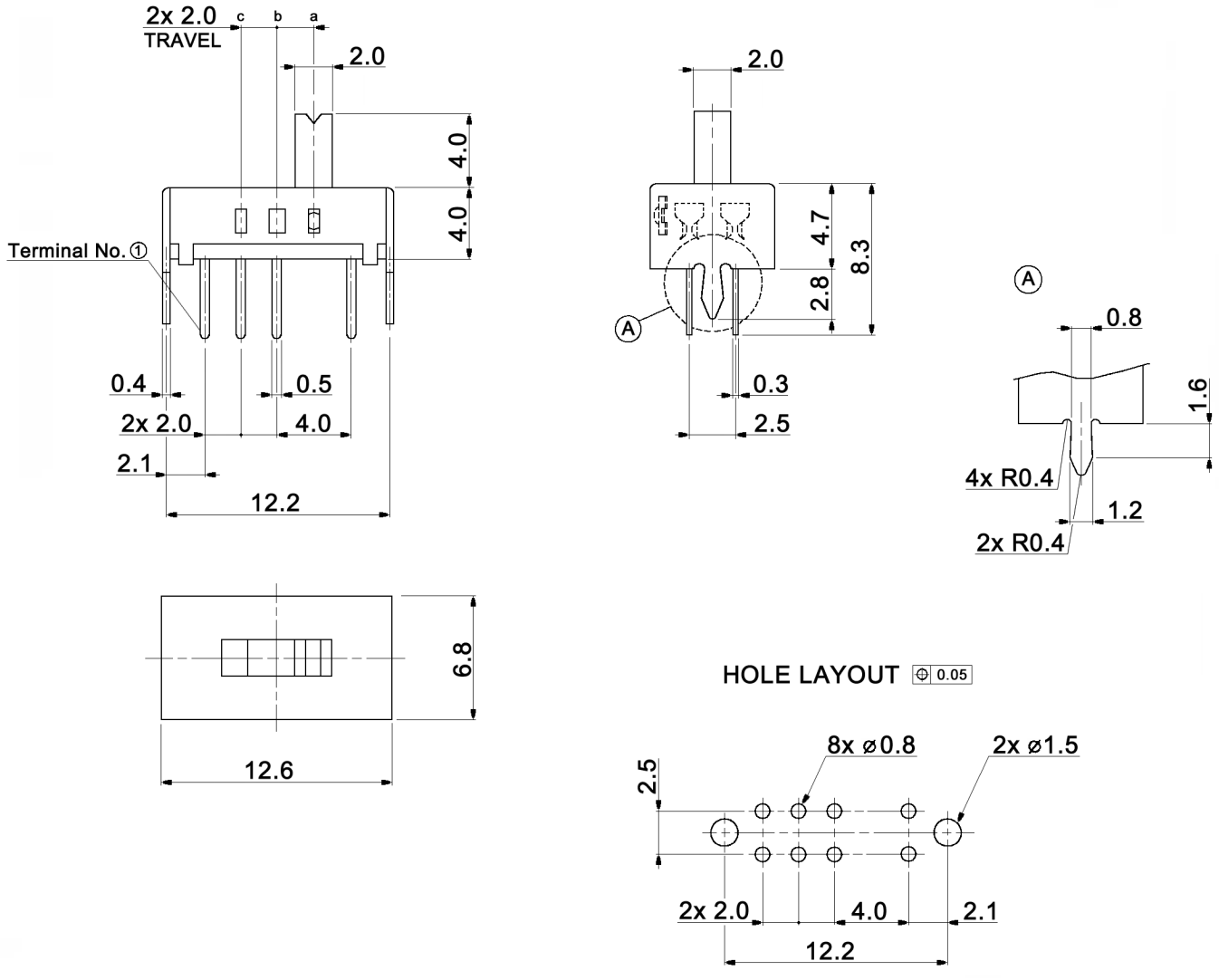


CIRCUIT DIAGRAM
C: COMMON PIN
BOTTOM VIEW

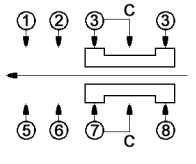


Specifications:

| | |
|---|---|
| Contact rating: | 0.3A, 30V DC |
| Contact resistance: | 20mOhm max. |
| Insulation resistance: | 100MOhm min. at 500V AC for 1minute |
| Dielectric strength: | 500V AC (50/60Hz, 2mA) for 1 minute |
| Operating temperature: | -25°C to +85°C |
| Mechanical life: | 10 000 cycles |
| Operating force: | 250 +/-100gf |
| Soldering conditions: | 260 +/-5°C, 5 +/-1sec. |
| Material: | Spring plate: phosphor bronze, washing |
| | Contact clip: phosphor bronze, silver plated |
| | Slider: PA46, black |
| | Terminal: brass strip, silver plated |
| | Base: phenolic resin, natural |
| | Frame: steel, tin plated |

RoHS-conform · 2002 / 95 / EC

| Tolerances: up to 10: ±0.2mm above 10-50: ±0.3mm | | | Date | Name | MFP 213 P |
|---|---|---|---|---|---|
| | | | 04/10 | dr | |
| Specifications | 07/13 | dr | knitter-switch | 30 20 65 | Page |
| Contact rating | 03/13 | dr | | | 1/1 |
| Modifications | Date | Name | | | |