TECHNICAL DATASHEET

Absolute Encoder AC 58 - Interbus

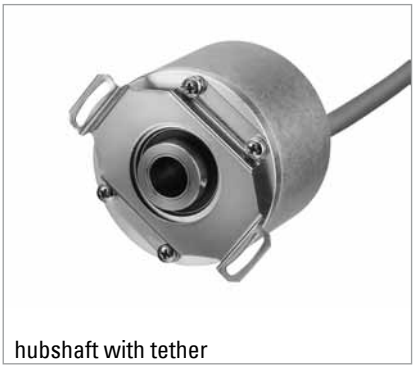

hubshaft with tether

- Resolution programmable (K3)
- Resolution up to 24 Bit
- Preset (K3)
- Direction (K3)
- Diagnostic LED

TECHNICAL DATA
mechanical

Housing diameter	58 mm
Shaft diameter	6 mm / 10 mm (Solid shaft) 10 mm / 12 mm (Hub shaft)
Flange (Mounting of housing)	Synchro flange, Clamping flange, Tether, Square flange
Protection class shaft input (EN 60529)	IP64 or IP67
Protection class housing (EN 60529)	Connection bus cover: IP67 Connection cable or M23 (conin): IP64 (IP67 optional)
Shaft load axial / radial	40 N / 60 N
Max. speed	max. 10 000 rpm (continuous), max. 12 000 rpm (short term)
Starting torque typ. [1]	≤ 0.01 Nm
Moment of inertia	ca. 3.8 x 10^{-6} kgm²
Vibration resistance (DIN EN 60068-2-6)	100 m/s² (10 ... 500 Hz)
Shock resistance (DIN EN 60068-2-27)	1000 m/s² (6 ms)
Operating temperature	-40 °C ... +70 °C
Storage temperature	-40 °C ... +85 °C
Material shaft	Stainless Steel
Material housing	Aluminum
Weight	approx. 350 g (ST) / 400 g (MT)
Connection	Bus cover with 3 sealed cable exits Bus cover with 2x M23 connectors (Conin), 9 pole Cable 1.5 m with M23 connector (Conin), 12 pole, axial or radial

[1] at 20°C

TECHNICAL DATA
electrical

General design	as per DIN EN 61010-1, protection class III, contamination level 2, overvoltage class II
Supply voltage	DC 10-30 V
Max. current w/o load	220 mA (ST, recommended external fuse: T 0.25 A), 250 mA (MT, recommended external fuse: T 0.25 A)
EMC	Noise emission according to EN 50081-2 Immunity to interference according to EN 50082-2
Resolution singleturn	10 - 12 Bit
Resolution multiturn	12 Bit
Output code	32 Bit binary
Linearity	± ½ LSB

TECHNICAL DATASHEET

Absolute Encoder AC 58 - Interbus

TECHNICAL DATA
electrical (continued)

Profile/ protocol	ENCOM-Profil K3 = ID-Code 37, K2 = ID-Code 36
Programmable	Resolution, Preset, Offset, Direction
Output current [1]	max. 4.5 A for bus cover with 2x M23 (recommended external fuse: T 4.5 A) max. 2 A for all other connections (recommended external fuse: T 2 A)
Baud rate	500 KBaud
Updating of values	every 600 µs

[1] Current with looped through voltage supply

DATA FORMAT Interbus K2/K3

	Differential signals (RS485) ENCOM profile K3, K2, 32 Bit, binary process data				
Data format	Sµpi-address	0	1	2	3
(as per Phoenix)	Byte-No.	3	2	1	0
ID-Code K2	36H (= 54 decimal)				
ID-Code K3	37H (= 55 decimal)				

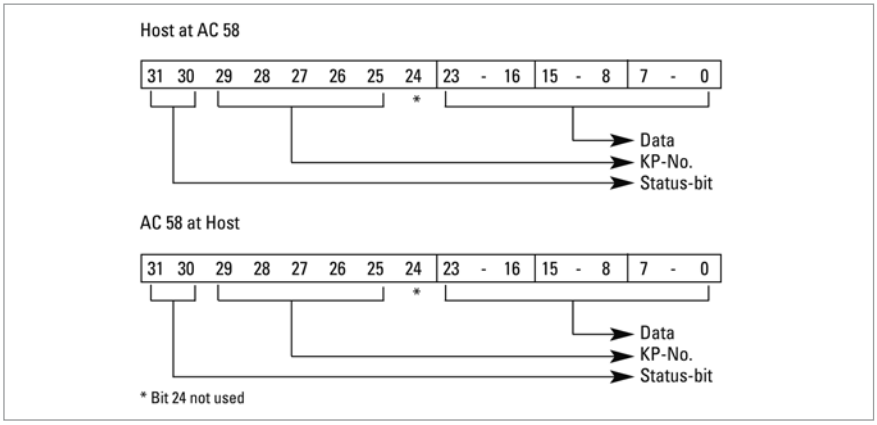

PROGRAMMABLE FUNKTIONS
for Interbus K3

Function (Programming directly via the bus through transfer of configuration parameters)	**Preset values (manufacturer´s standard settings)**	**Customer-specific parameters**
Code sequence for clockwise (cw) rotation	ascending	
Offset (KP-No. 05)	0	
Preset value (KP-No. 04)	0	
Scaling faktor (KP-No. 08)	1 [1]	

[1] maximum resolution

TECHNICAL DATASHEET

Absolute Encoder AC 58 - Interbus

ELECTRICAL CONNECTIONS
Cable with M23 connector (Conin), 12 pole (Standard according to ENCOM for remote installation bus)

Plug pin	Signal
1	D02
2	$\overline{D02}$
3	DI 2
4	$\overline{DI}$ 2
5	D01
6	$\overline{D01}$
7	DI 1
8	$\overline{DI1}$
9	$\overline{RBST}$
10	GND- signal output [1]
11	0 V (supply voltage)
12	DC 10 - 30 V

[1] Due to electrical isolation not identical with 0 V (supply voltage) identisch; used by T-manifold to set the RBST input logical on "0"

ELECTRICAL CONNECTIONS
Bus cover with 2x M23 connector (Conin), 9 pole
(Standard according to ENCOM for remote installation bus)

Pin	IN (9 pole pins)	OUT (9 pole socket)
1	D01	D02
2	$\overline{D01}$	$\overline{D02}$
3	DI 1	DI 2
4	$\overline{DI1}$	$\overline{DI2}$
5	GND- signal output [1]	GND- signal output [1]
6	PE [2]	PE [2]
7	DC10 - 30 V (SELV)	DC10 - 30 V (SELV)
8	0 V (supply voltage)	0 V (supply voltage)
9	N.C.	$\overline{RBST}$

[1] Due to electrical isolation not identical with 0 V (supply voltage) identisch; used by T-manifold to set the RBST input logical on "0"

[2] Functional earthing; connected with the encoder housing

ELECTRICAL CONNECTIONS
Bus cover with 3 sealed cable exits

Connection clamp (12 pole)	
1	UB +
2	GND
3	DI1+
4	DI1-
5	D01+
6	D01-
7	D02+
8	D02-
9	DI2+
10	DI2-
11	RBST
12	GND

TECHNICAL DATASHEET

Absolute Encoder AC 58 - Interbus

DIMENSIONED DRAWINGS

Synchro flange "S"

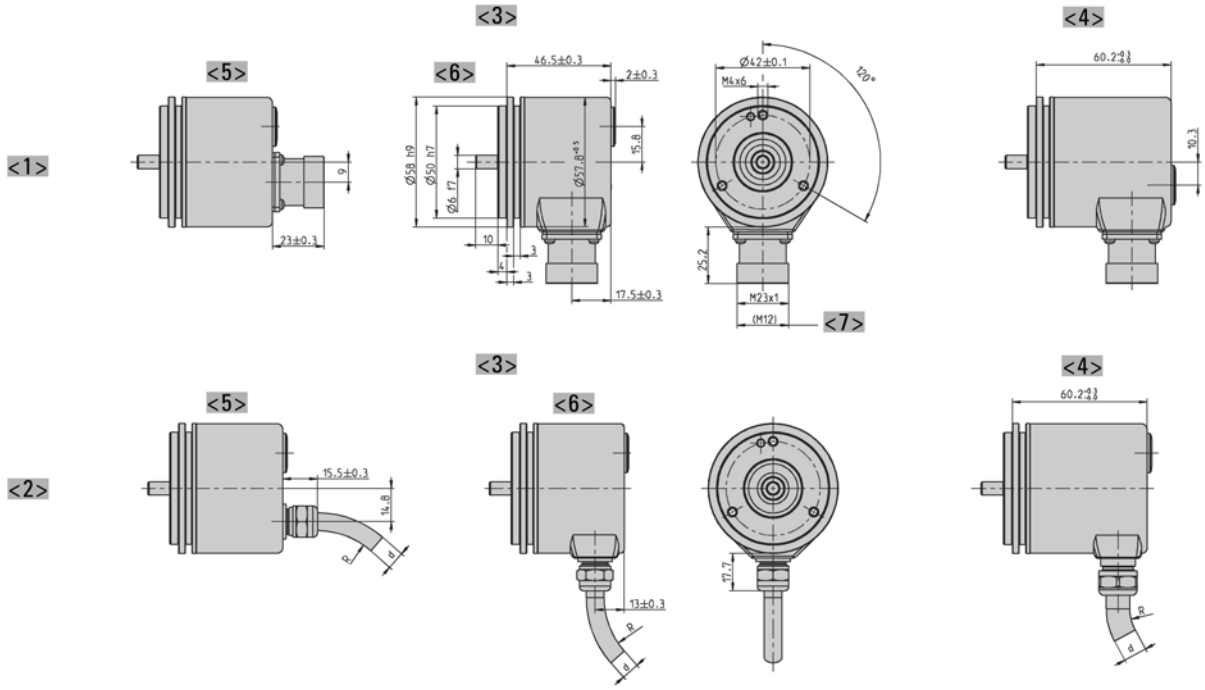

<1> Connection M23 (Conin)
<2> Connection cable
<3> Interface: BiSS, SSI, ST-Parallel
<4> Interface: MT-Parallel (only with cable), Fieldbus, SSI-P
<5> axial
<6> radial
<7> Value in brackets alternative at SSI

Cable bending radius R for flexible installation ≥ 15 x cable diameter
Cable bending radius R for fixed installation ≥ 7.5 x cable diameter
Cable Ø d BiSS/SSI/SSI-P: 7,1 $^{+1,2}$
Cable Ø d ST-P: 7,8 $^{+0,9}$
Cable Ø d MT-P: 9,3 +1,3
Cable Ø d Fieldbus: 7,1 $^{+1,2}$

Dimensions in mm

TECHNICAL DATASHEET

Absolute Encoder AC 58 - Interbus

DIMENSIONED DRAWINGS (continued)

Clamping flange "K"

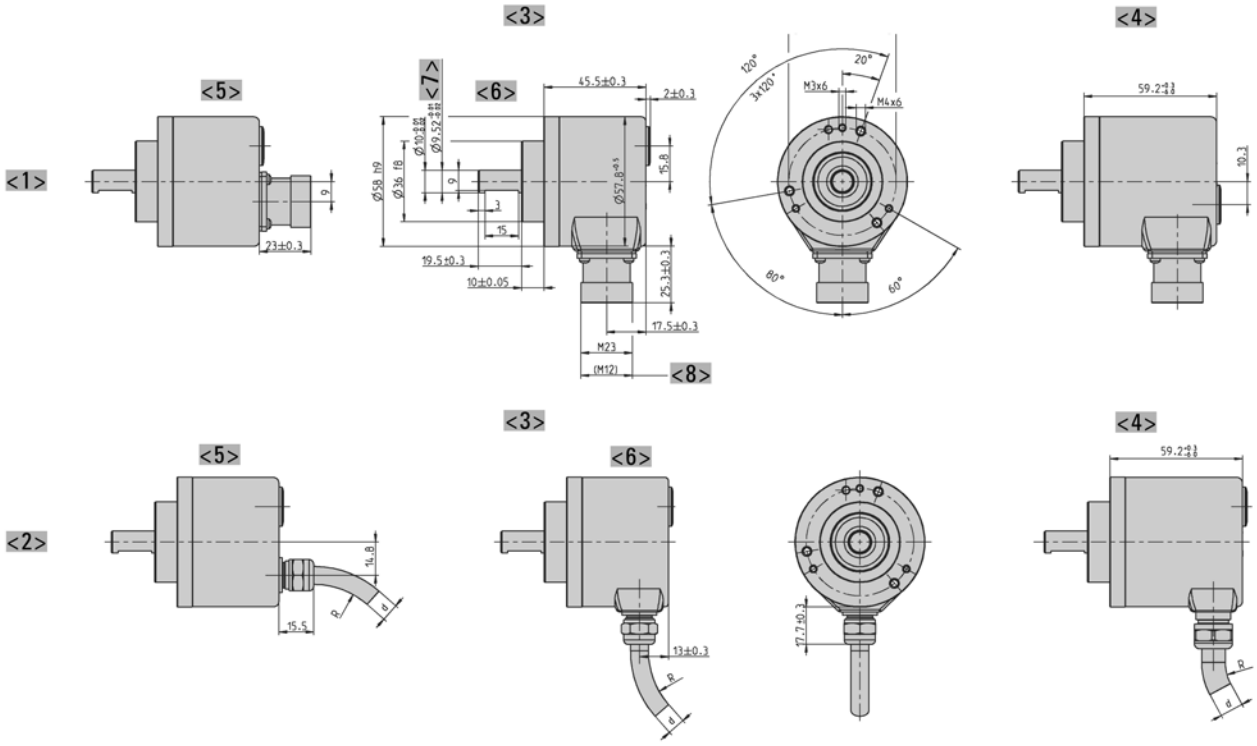

<1> Connection M23 (Conin)
<2> Connection cable
<3> Interface: BiSS, SSI, ST-Parallel
<4> Interface: MT-Parallel (only with cable), Fieldbus, SSI-P
<5> axial
<6> radial
<7> alternative

<8> Value in brackets alternative at SSI
Cable bending radius R for flexible installation ≥ 15 x cable diameter
Cable bending radius R for fixed installation ≥ 7.5 x cable diameter
Cable Ø d BiSS/SSI/SSI-P: 7,1 $^{+1,2}$
Cable Ø d ST-P: 7,8 $^{+0,9}$
Cable Ø d MT-P: 9,3 +1,3
Cable Ø d Fieldbus: 7,1 $^{+1,2}$

Dimensions in mm

Absolute Encoder AC 58 - Interbus

DIMENSIONED DRAWINGS (continued)

Hollow shaft "F"

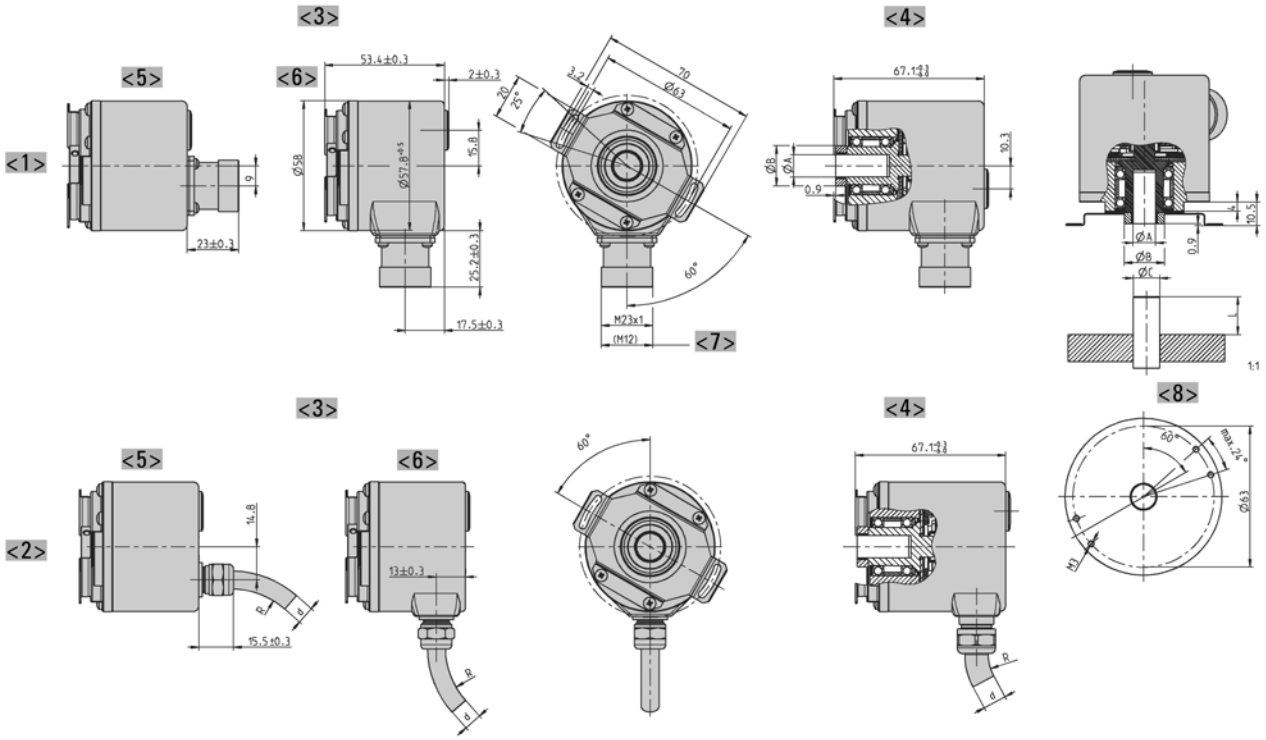

	Dim.				Unit
Hollow shaft Ø A	10 +0.012	12 +0.012	9,52 +0.012	12,7 +0.012	mm
Connecting shaft Ø C	10 g7	12 g7	9,52 g7	12,7 g7	mm
Clamping ring Ø B	18	20	18	22	mm
L_{min}	15	18	15	18	mm
L_{max}	20	20	20	20	mm
Shaft code	"2"	"7"	"6"	"E"	
L = Inside length of connection shaft					

<1> Connection M23 (Conin)
<2> Connection cable
<3> Interface: BiSS, SSI, ST-Parallel
<4> Interface: MT-Parallel (only with cable), Fieldbus, SSI-P
<5> axial
<6> radial
<7> Value in brackets alternative at SSI
<8> Customer side
Cable bending radius R for flexible installation ≥ 15 x cable diameter
Cable bending radius R for fixed installation ≥ 7.5 x cable diameter
Cable Ø d BiSS/SSI/SSI-P: 7,1 +1,2
Cable Ø d ST-P: 7,8 +0,9
Cable Ø d MT-P: 9,3 +1,3
Cable Ø d Fieldbus: 7,1 +1,2

Dimensions in mm

TECHNICAL DATASHEET

Absolute Encoder AC 58 - Interbus

DIMENSIONED DRAWINGS (continued)

Square flange "Q"

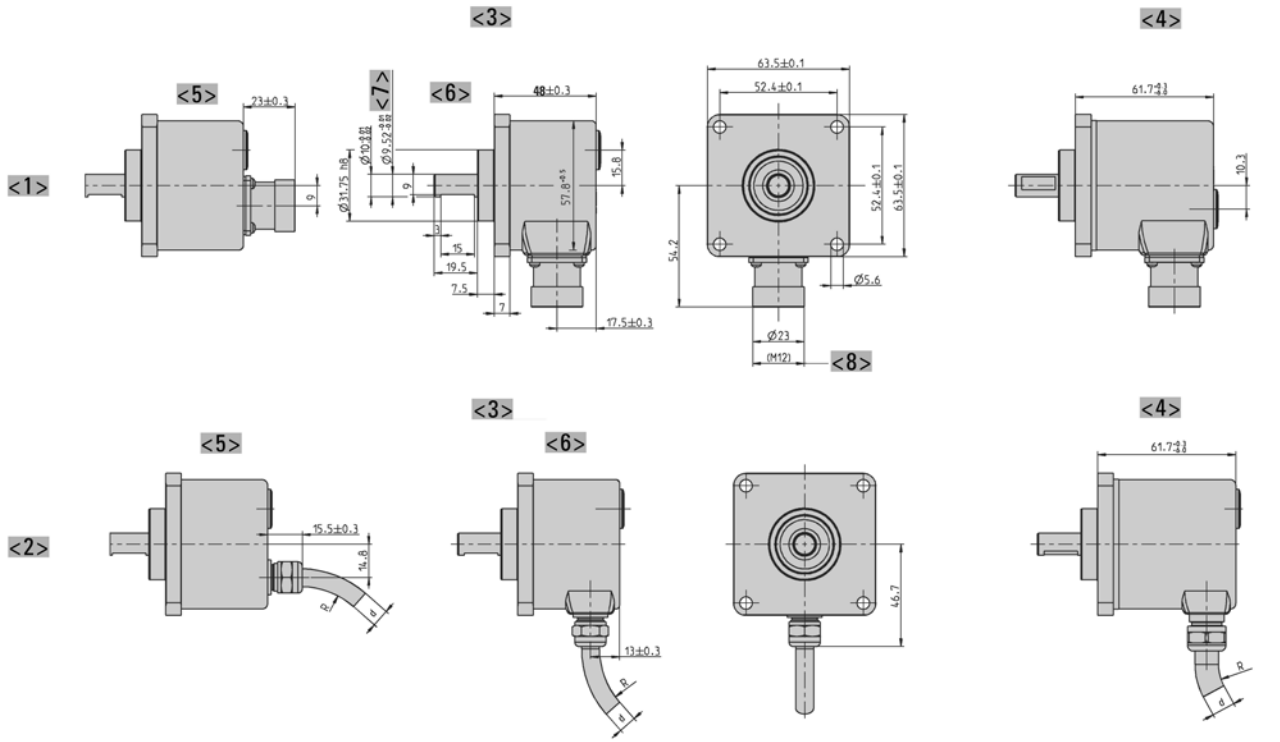

<1> Connection M23 (Conin)
<2> Connection cable
<3> Interface: BiSS, SSI, ST-Parallel
<4> Interface: MT-Parallel (only with cable), Fieldbus, SSI-P
<5> axial
<6> radial
<7> alternative

<8> Value in brackets alternative at SSI
Cable bending radius R for flexible installation ≥ 15 x cable diameter
Cable bending radius R for fixed installation ≥ 7.5 x cable diameter
Cable Ø d BiSS/SSI/SSI-P: 7,1 $^{+1,2}$
Cable Ø d ST-P: 7,8 $^{+0,9}$
Cable Ø d MT-P: 9,3 +1,3
Cable Ø d Fieldbus: 7,1 $^{+1,2}$

Dimensions in mm

TECHNICAL DATASHEET

Absolute Encoder AC 58 - Interbus

DIMENSIONED DRAWINGS (continued)

Bus covers

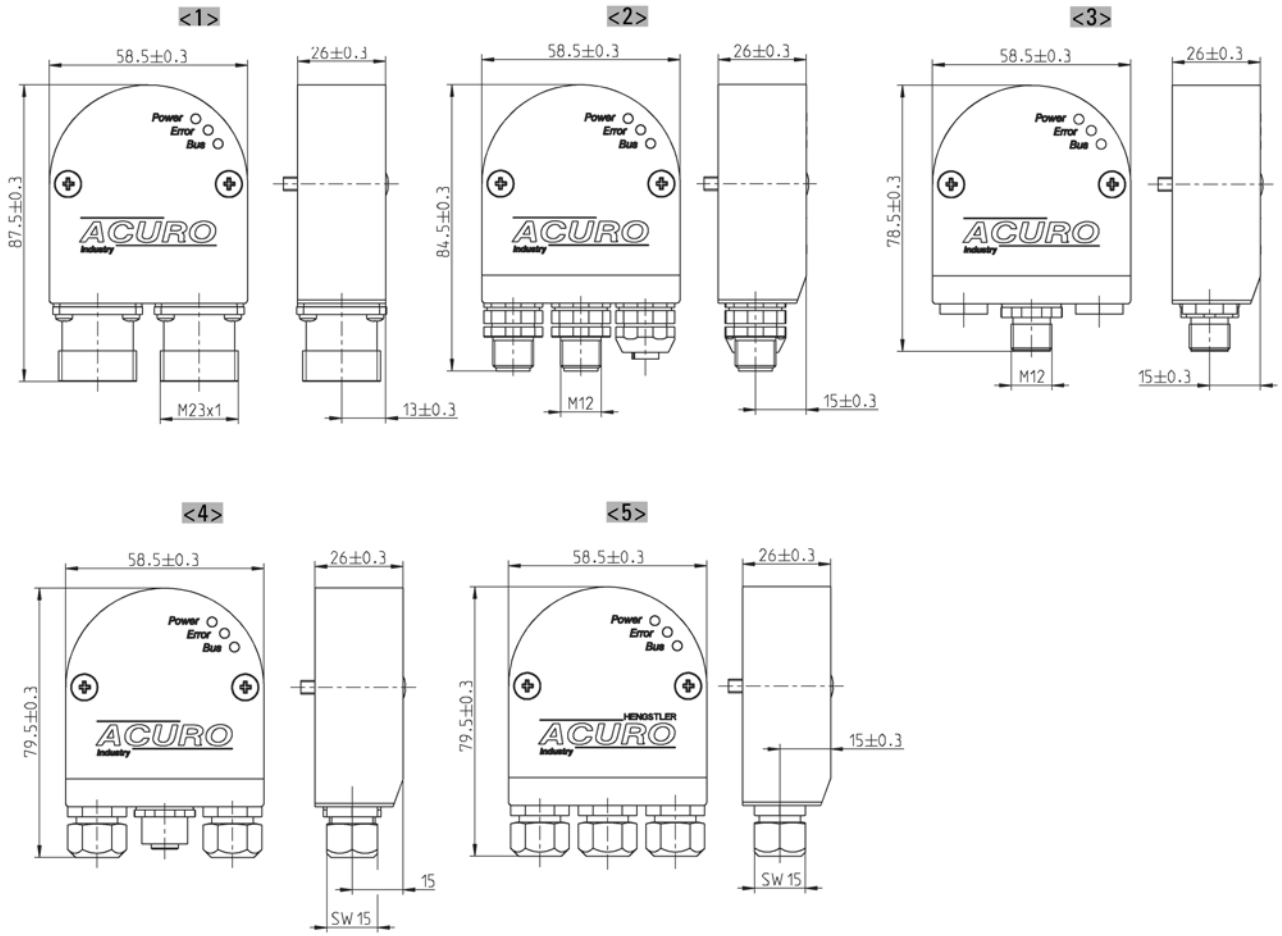

<1> Connection "I"
<2> Connection "R"
<3> Connection "S"
<4> Connection "T"
<5> Connection "Z"

Dimensions in mm

DIMENSIONED DRAWINGS (continued)

Synchro flange "S"

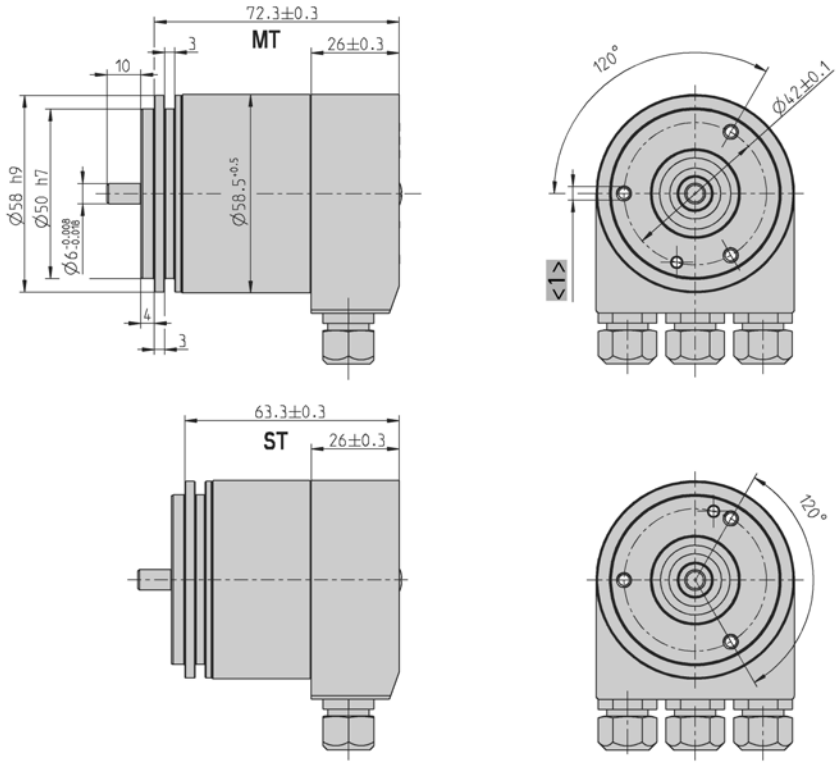

<1> 3xM4 (6 deep)

Dimensions in mm

TECHNICAL DATASHEET

Absolute Encoder AC 58 - Interbus

DIMENSIONED DRAWINGS (continued)

Clamping flange "K"

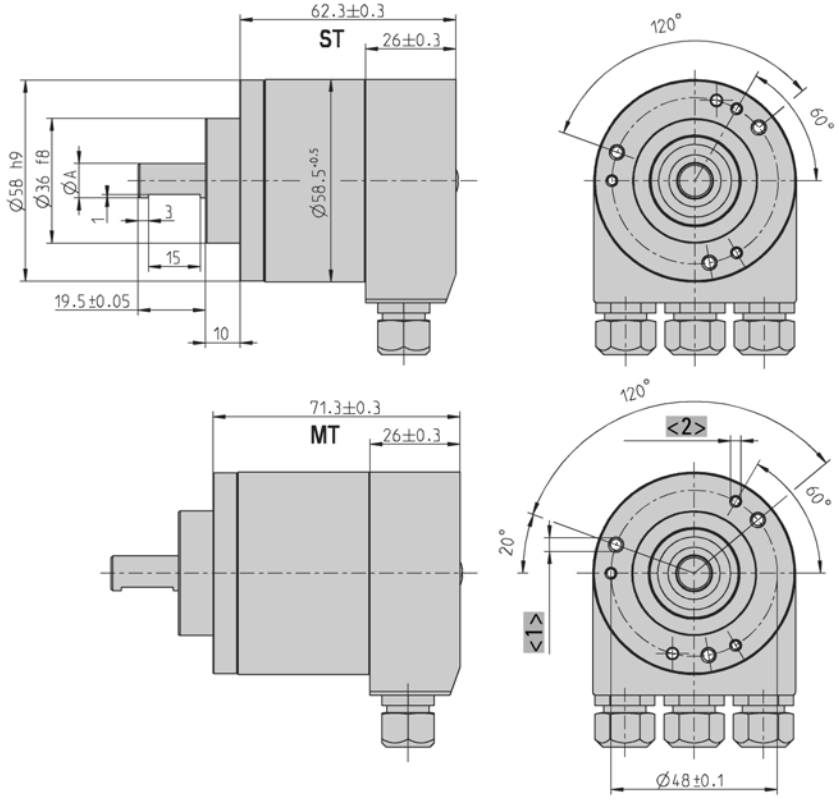

	Dim.		Unit
Shaft Ø A	10 $^{-0.01/-0.02}$	9.52 $^{-0.01/-0.02}$	mm
Shaft code	"2"	"6"	

<1> 3xM4 (6 deep)
<2> 3xM3 (6 deep)

Dimensions in mm

DIMENSIONED DRAWINGS (continued)

Hollow shaft "F"

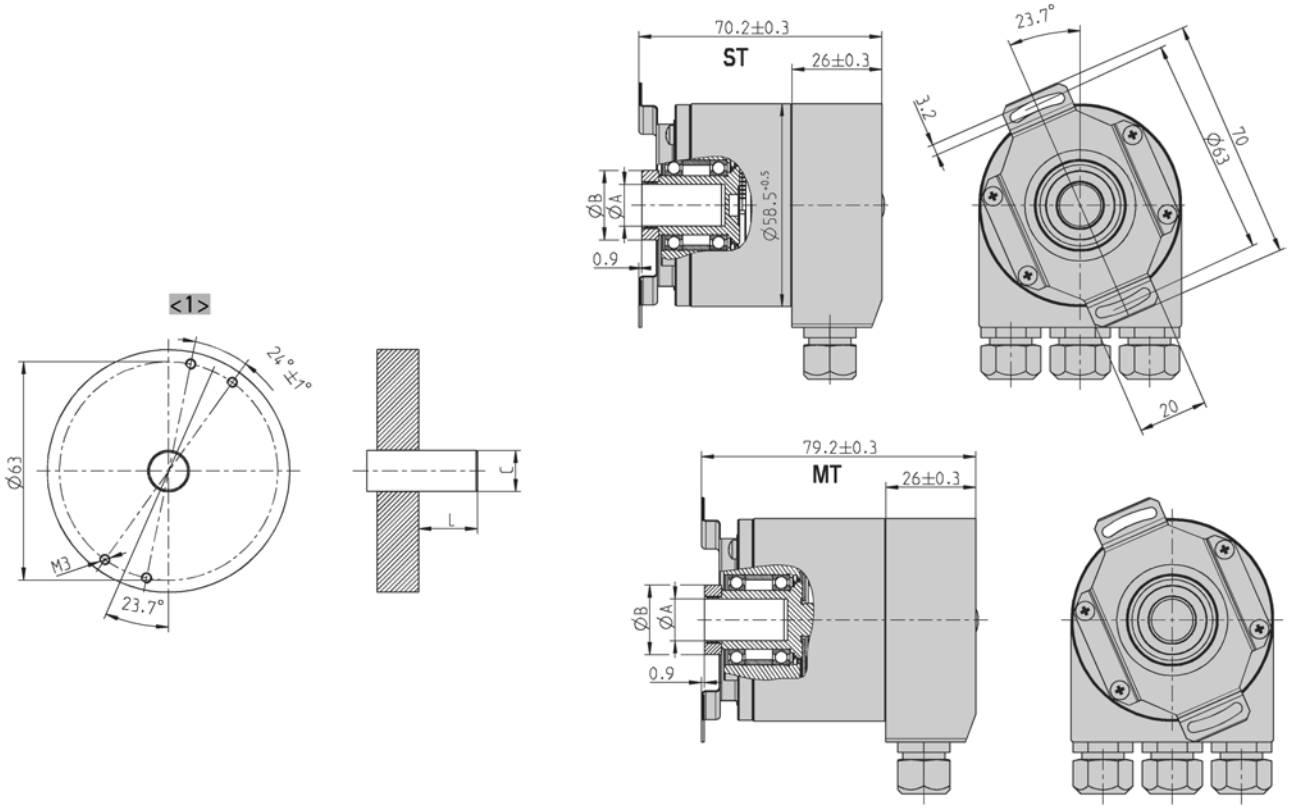

	Dim.				Unit
Hollow shaft Ø A	10 +0.012	12 +0.012	9,52 +0.012	12,7 +0.012	mm
Connecting shaft Ø C	10 g7	12 g7	9,52 g7	12,7 g7	mm
Clamping ring Ø B	18	20	18	22	mm
L_{min}	15	18	15	18	mm
L_{max}	20	20	20	20	mm
Shaft code	"2"	"7"	"6"	"E"	
L = Inside length of connection shaft					

<1> Customer side

Dimensions in mm

Absolute Encoder AC 58 - Interbus

DIMENSIONED DRAWINGS (continued)

Square flange "Q"

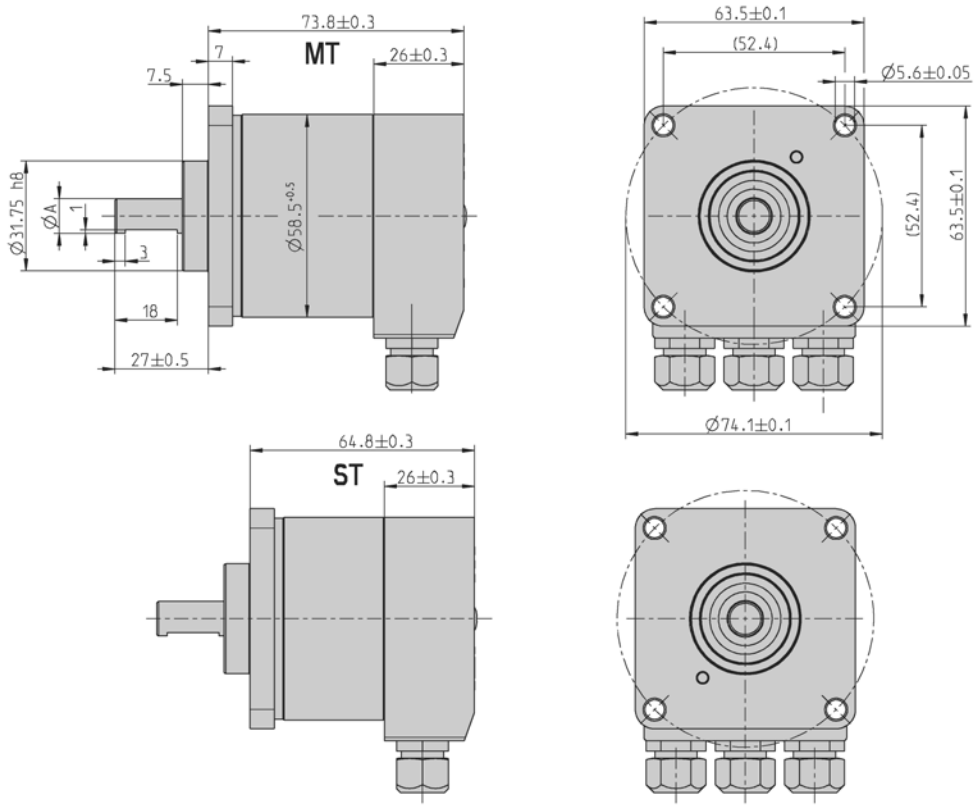

	Dim.		Unit
Shaft Ø A	10 -0.01/-0.02	9.52 -0.01/-0.02	mm
Shaft code	"2"	"6"	

Dimensions in mm

TECHNICAL DATASHEET

Absolute Encoder AC 58 - Interbus

ORDERING INFORMATION

Type	Resolution	Supply voltage	Flange, Protection, Shaft [1]	Interface	Connection
AC58	**0010** 10 Bit ST **0012** 12 Bit ST **1212** 12 Bit MT + 12 Bit ST	**E** DC 10 - 30 V	**S.41 Synchro, IP64, 6 mm** **S.71 Synchro, IP67, 6 mm** **K.42 Clamping, IP64, 10 mm** **K.46** Clamping, IP64, 9.52 mm **K.72 Clamping, IP67, 10 mm** **K.76** Clamping, IP67, 9.52 mm **F.46** Spring tether, IP64, hubshaft 9.52 mm, mounting with clamping ring front **F.42 Spring tether, IP64, hubshaft 10 mm, mounting with clamping ring front** **F.47 Spring tether, IP64, hubshaft 12 mm, mounting with clamping ring front** **Q.46** Square, IP64, 9.52 mm **Q.42** Square, IP64, 10 mm **Q.76** Square, IP67, 9.52 mm **Q.72** Square, IP67, 10 mm	**I2** Interbus K2 **I3** Interbus K3	**I** Bus cover with 2x M23 connector (Conin), 9 pole, radial, cw **Z** Bus cover with 3 sealed cable exits **A-B5-C** 1.5 m cable with M23 connector (Conin), 12 pole, axial **B-B5-C** 1.5 m cable with M23 connector (Conin), 12 pole, radial

[1] Protection class IP67 not available in combination with LED display for connection with cable (connection code A-B5-C and B-B5-C)

Preferably available versions are printed in bold type.

TECHNICAL DATASHEET

Absolute Encoder AC 58 - Interbus
Accessories

FLEXIBLE COUPLINGS



Bellows coupling



Disk coupling



Helical coupling



Isolated disk coupling

		Ordering code
Bellows coupling	10 mm / 10 mm	3 520 037
Bellows coupling	6 mm / 6 mm	3 520 068
Bellows coupling	8 mm / 10 mm	3 520 077
Disk coupling	6 mm / 6 mm	0 070 663
Helical coupling 19/28	5 mm / 6 mm	3 520 035
Helical coupling 19/28	6 mm / 6 mm	0 070 653
Helical coupling 19/28	6 mm / 6.35 mm	3 520 051
Helical coupling 25/32	6 mm / 9.53 mm	3 520 052
Helical coupling 25/32	6 mm / 10 mm	3 520 066
Helical coupling 25/32	10 mm / 12 mm	3 520 065
Helical coupling 25/32	10 mm / 10 mm	3 520 074
Isolated disk coupling	6 mm / 6 mm	3 520 081
Isolated disk coupling	6 mm / 10 mm	3 520 082
Isolated disk coupling	10 mm / 10 mm	3 520 088

MOUNTING

	Ordering code
Clamping eccentric, For M4 (set of three)	1 522 300
Clamping eccentric for synchro flange, d6,5 for M3 (set of three)	0 070 655
Fastening angle (plastic), for clamping flange RI 58, AC 58 (fastening material included)	1 522 329
Mounting bell (plastic), for synchro flange RI 58, AC 58 (clamping eccentric and fastening material included)	1 522 330
Square flange adapter 58 x 58 mm, for clamping flange RI 58, AC 58 (fastening material included)	1 522 326
Square flange adapter 80 x 80 mm, for clamping flange RI 58, AC 58 (fastening material included)	1 522 327
Synchro flange adapter , for clamping flange RI 58, AC 58 (fastening material included)	1 522 328
Torque support	1 531 188

CONNECTING CABLES

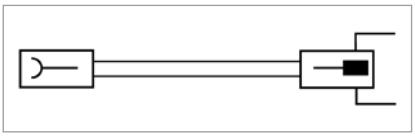

Connecting cables with connector on both end	Ordering code
M23 (Conin), 12 pole, TPE cable, mating connector for connection -C (cable plug cw), 3 m	1 542 017
M23 (Conin), 12 pole, TPE cable, mating connector for connection -C (cable plug cw), 5 m	1 542 018
M23 (Conin), 12 pole, TPE cable, mating connector for connection -C (cable plug cw), 10 m	1 542 019

TECHNICAL MANUALS

	Ordering code
Technical manual, German	2 565 217 (or homepage)