87045 LIMOGES CEDEX
Telephone : (+33) 05 55 06 87 87 - Fax : (+33) 05 55 06 88 88

Vistop 63 to 160 A Isolating switches

Catalogue number(s) : 0 225 12/15/16/18/20/22/25/27/34/39
0 225 44/46/51/53/54/56
0 223 12/15/16/18/20/22/27/34/39/51/53



CONTENTS Page

1. Use 1
2. Range 1
3. Overall dimensions 1
4. Technical features 2
5. Conformity 2
6. Installation 2
7. Accessories 2-3

1. USE

Safety isolating switches with visible full load break and positive action of the contacts. Double breaking of the phases by self-cleaning contacts with rapid make and break movement.

2. RANGE

• 3-pole and 4-pole 63 - 100 - 125 - 160 A
• 2 versions for mounting on faceplate :
- with left or right side handle.
- external : supplied complete with a seal to maintain the IP (up to IP 55) protection of the housing, mounting accessories, self-adhesive drilling template, adjustable extension shaft (30 to 170 mm).
- direct or external front handle with Cat. No. 227 32 to be ordered separately.
- label holder for identification
- connection via cage terminals with PZ2 screw clamping (63A) and Allen key (100 to 160A).
- screw fixing or on rail EN 50022 (only on rail for Vistop 63 A).
- option of attaching a 2P – 16A auxiliary isolating switch (for 100 and 160 A ratings) and one or two auxiliary NC + NO contacts.

	Number of 17.5 mm modules	
	Front handle	External right or left side handle
63 A		
Black handle		
3-pole	7	7
4-pole	7	7
Red handle/yellow faceplate		
3-pole	7	7
4-pole	7	7
100 A		
Black handle		
3-pole	7.5	7.5
4-pole	9	9
Red handle/yellow faceplate		
3-pole	7.5	-
4-pole	9	9
125 A		
Black handle		
3-pole	7.5	7.5
4-pole	9	9
Red handle/yellow faceplate		
3-pole	7.5	-
4-pole	9	-

2. RANGE *(continued)*

	Number of 17.5 mm modules	
	Front handle	External right or left side handle
160 A		
Black handle		
3-pole	7.5	7.5
4-pole	9	9
Red handle/yellow faceplate		
3-pole	7.5	-
4-pole	9	-

3. OVERALL DIMENSIONS

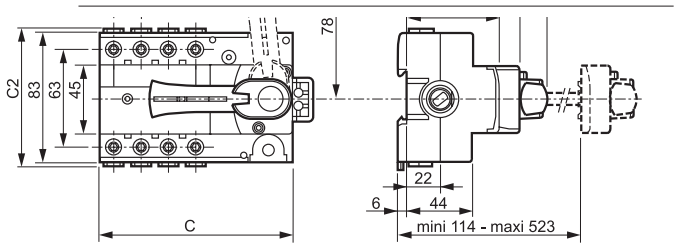

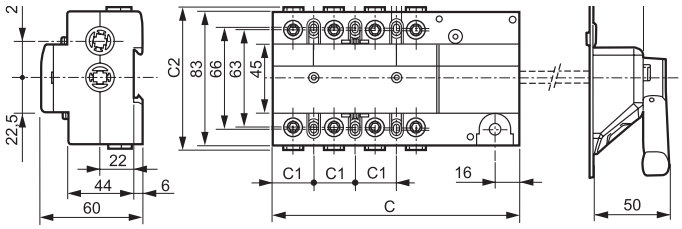

	Front handle			External side handle		
	63 A	100 A, 125 A, 160 A		63 A	100 A, 125 A, 160 A	
	3-, 4-poles	3P	4 P	3-, 4-poles	3 P	4 P
C	125	133	160	125	133	160
C_1	17.7	26.7		17.7	26.7	
C_2	91	91		91	91	

Vistop 63 to 160 A
Isolating switches

Catalogue number(s) : 0 225 12/15/16/18/20/22/25/27/34/39
0 225 44/46/51/53/54/56
0 223 12/15/16/18/20/22/27/34/39/51/53

4. TECHNICAL FEATURES

		Vistop				Isolating switch 16 A
Thermal rating (Ith)		63 A	100 A	125 A	160 A	
Terminals		cage	cage	cage	cage	cage
connection	Cu (flexible)	4 to 35²	4 to 50 mm 6²			6²
	Cu (rigid)	4 to 50²	4 to 70 mm 6²			6²
Insulation voltage (Ui)		690 V ac	800 V ac	800 V ac	800 V ac	400 V ac
Impulse withstand voltage (Uimp)		8 Kv ac	8 Kv ac	8 Kv ac	8 Kv ac	-
AC 22 A AC 23 A[1]	400 V	63 A (35 kW)	100 A (55 kW)	125 A (70 kW)	160 A (88 kW)	16 A
	500 V	63 A (44 kW)	100 A (69 kW)	125 A (87 kW)	160 A (110 kW)	-
	690 V	40 A (38 kW)	100 A (96 kW)	125 A (120 kW)	125 A (120 kW)	
DC 22 A/250 V[1] [2]		*	100	125	125	16 A
DC 23 A/250 V[1] [2]		*	100	125	125	10 A
Breaking capacity (kA peak)		15	15	15	15	2
1 s resistant current (kA efficace) (Icw)		2.5	3.5	3.5	3.5	0,3
Icc with fuses (kA rms)		100	100	100	80	100
Max rating of fuses		63 A	100 A (gG) 63 A (aM)[3]	125 A (gG) 125 A (aM)[3]	160 A (gG) 125 A (aM)	-
Short-circuit capacity (kA prospective peak) (Icm)		7	12	12	12	1
Mechanical endurance (No. of operations)		> 30 000	> 30 000	> 30 000	> 30 000	> 30 000
Index of protection		IP 2x B (IP 3x C under faceplate) à partir de 6²	IP 2x B (IP 3x C under faceplate) from 10²			

(1) Test conditions in accordance with IEC 60947-3
AC = alternating current DC = direct current A = use with frequent operations
AC 22 A/DC 22 A: resistive motor breaking
AC 23 A/DC 23 A: inductive motor breaking
(2) Number of breaking contacts: 2
(3) 100 A (aM) in blade-type cartridge fuses
(4) Values correspond to the device mounted on Vistop 100 - 125 - 160 A

Consumption when hot at rated current according to IEC 947.1

Rating	Consumption
63 A	0.8 W
100 A	2.1 W
125 A	3.3 W
160 A	5.3 W

Storage temperature: - 10°C to + 70°C.
Operating temperature: - 5°C to + 70°C.
Materials:
- Casing in polyamide 960°C
- Indicator light in polycarbonate 750°C

5. CONFORMITY

Conform to standards NF C 63-130, NF EN 60943-3, IEC 60947-3, BS EN 60947-3, VDE 0660, NBN EN 60947-3, CNOMO E03 - 15-611 R, Veritas approved

6. INSTALLATION

• Fixing
• Vistop 63 A: fixing on rail
• Vistop 100 - 125 - 160 A: Screw-fixing or on rail with bistable claws with locking
• Connection in cage terminals :
- 63A : PZ2, tightening at 2,8Nm maxi
- 100 - 125 - 160A : Allen key, tightening at 6Nm maxi

7. ACCESSORIES

0 227 04 Contact 0 + C

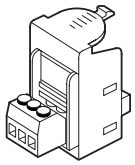

0 227 07 Additional NO + NC auxiliary contact, adds to the 227 04 for 2 N/C + 2 N/O mounting

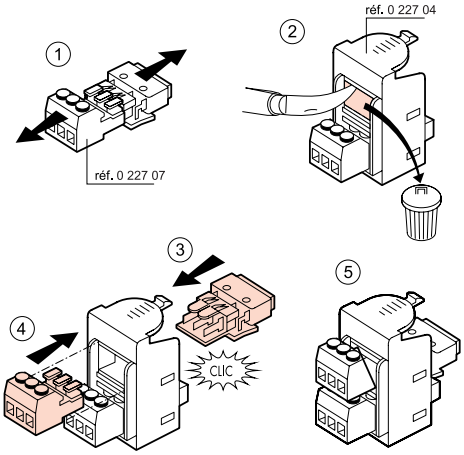

0 227 22 Auxiliary isolating switch 2P 16A 400 V. Cage terminals
1.5 module
For creating 3 or 4-pole assemblies 100, 125 and 160 A, + 2-pole 16A
Enables simultaneous breaking of 2-pole auxiliary power supply, 16 A maximum
Mounts on the left side of Vistop 100 to 160 A

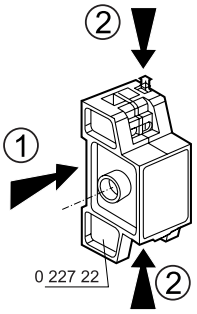

0 227 98 Set of two divisible, sealable terminal shields
Prevents access to the connection and fixing screws for application of commercial sector tariff (Vistop 100 to 160 A)



7. ACCESSSORIES *(continued)*

0 048 67 **Distribution terminal – 6 outputs, 25 mm²** mounts directly in the downstream terminal of the Vistop



0 227 32 **External front handle**
Kit comprising: connecting rod, bracket, self-adhesive drilling template, mounting accessories including a seal for maintaining IP 55 protection of the housing, and locking mechanism preventing the door being opened when the circuit is closed.
For Vistop 63, 100, 125 and 160 A : door distance 35 to 470 mm.

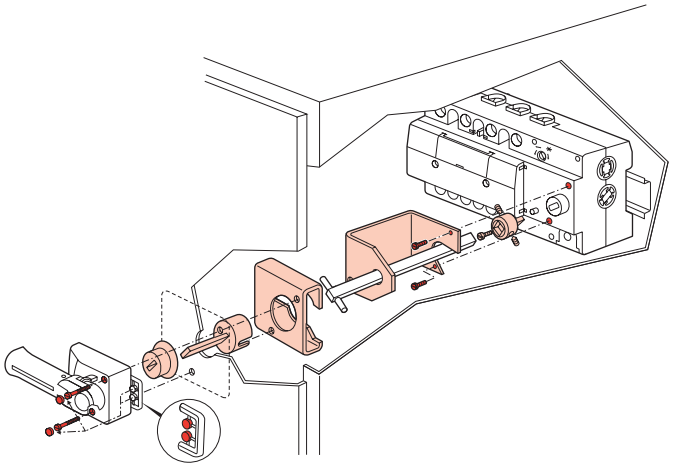

0 227 97 **Security padlock supplied with two keys**
(different key combination for each padlock).
Shackle ø 6 mm

