



Model Number

RLK29-55/25/116-Set

Retroreflective sensor
with terminal compartment

Features

- Robust, compact photoelectric sensor for single-beam gate protection
- Not sensitive to ambient light, even with energy saving lamps
- Tamper-proof, no operating controls
- Version for universal voltages
- Relay output
- Version with accessories in scope of delivery

Product information

Series 29 is a range of low-cost and, most importantly, reliable photoelectric sensors for monitoring industrial doors, elevators, and automatic gates. Their high degree of protection makes them the ideal solution for tasks outdoors and at thresholds, and in harsh environments. These "universal-voltage sensors" can be operated with any supply voltage from 24 V to 240 V, and with direct current or alternating current.

Dimensions

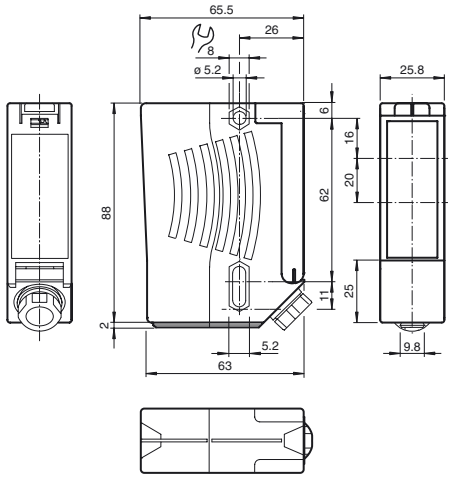

Electrical connection

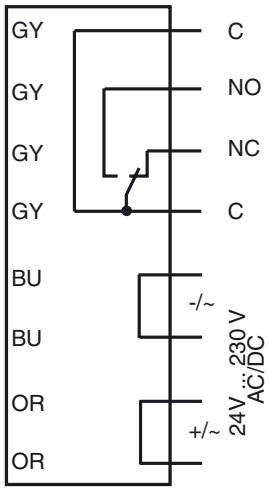

Indicators/operating means

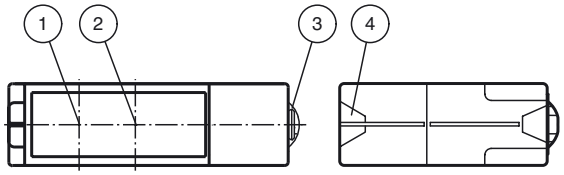

1	Emitter	
2	Receiver	
3	Dovetail mount	
4	Functional display	yellow

Release date: 2014-06-18 09:44 Date of issue: 2014-06-18 128118_eng.xml

Technical data

General specifications		
Effective detection range		0 ... 12 m
Reflector distance		0.04 ... 12 m
Threshold detection range		14 m
Reference target		H85-2 reflector
Light source		LED
Light type		modulated visible red light , 640 nm
Diameter of the light spot		approx. 35 mm at a distance of 12 m
Angle of divergence		± 1 °
Ambient light limit		90000 Lux
Accessories provided		reflector C110-2 , Mounting bracket with mounting materials
Functional safety related parameters		
$MTTF_d$		1460 a
Mission Time (T_M)		20 a
Diagnostic Coverage (DC)		0 %
Indicators/operating means		
Function indicator		LED red illuminates: when beam is free flashes: when level falls below function reserve off: when beam is interrupted
Electrical specifications		
Operating voltage	U_B	24 ... 230 V AC/DC
Ripple		10 %
No-load supply current	I_0	≤ 8.5 mA
Power consumption	P_0	0.2 W at 24 V DC , 1.8 W at 230 V AC 3 VA
Output		
Switching type		light on
Signal output		Relay, 1 alternator
Switching voltage		230 V AC
Switching current		max. 2 A
Switching frequency	f	7 Hz
Response time		50 ms
Ambient conditions		
Ambient temperature		-20 ... 60 °C (-4 ... 140 °F)
Storage temperature		-30 ... 70 °C (-22 ... 158 °F)
Mechanical specifications		
Degree of protection		IP67
Connection		terminal compartment
Material		
Housing		Plastic ABS, flame resistant
Optical face		Plastic pane
Mass		approx. 200 g
Note		Safety fuse ≤ 2 A (slow-blow) according to IEC 60127-2 Sheet 1 Recommendation: after a short circuit, check that the device is functioning correctly.
Compliance with standards and directives		
Directive conformity		Low Voltage Directive 2006/95/EC EMC Directive 2004/108/EC
Standard conformity		
Product standard		EN 60947-5-2:2007 IEC 60947-5-2:2007
Approvals and certificates		
CE conformity		yes
UL approval		cULus Listed **Caution:** This equipment is considered as open-type equipment. It must be mounted within an enclosure, that is suitably designed for protection against internal fire and personal injury resulting from accessibility to live parts according UL 508.
CCC approval		Certified by China Compulsory Certification (CCC)

Typical applications

- Monitoring closing edges of automatic industrial doors and elevators
- Monitoring the swing range of automatic gates
- Detecting and tracking objects in material handling

Detection area



Accessories

OMH-RLK29
Mounting bracket

OMH-RLK29-HW
Mounting bracket for rear wall mounting

OMH-21
Mounting bracket

Other suitable accessories can be found at www.pepperl-fuchs.com

Release date: 2014-06-18 09:44 Date of issue: 2014-06-18 128118_eng.xml

Refer to “General Notes Relating to Pepperl+Fuchs Product Information”.
Pepperl+Fuchs Group www.pepperl-fuchs.com
USA: +1 330 486 0001 fa-info@us.pepperl-fuchs.com
Germany: +49 621 776 4411 fa-info@de.pepperl-fuchs.com
Singapore: +65 6779 9091 fa-info@sg.pepperl-fuchs.com
PEPPERL+FUCHS SENSING YOUR NEEDS

Curves/Diagrams

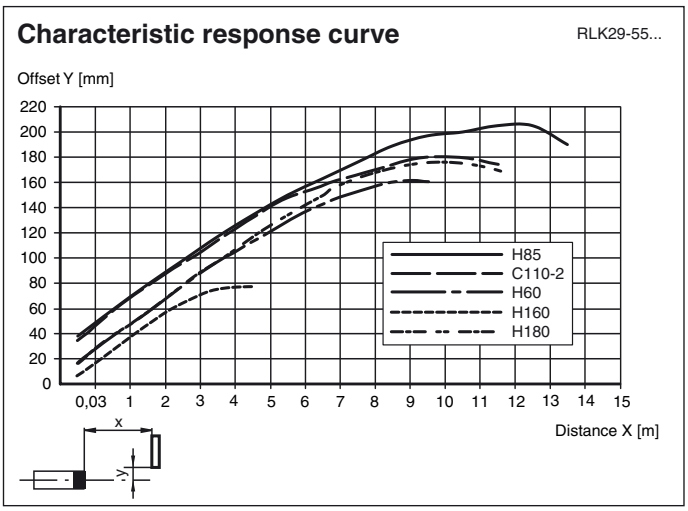

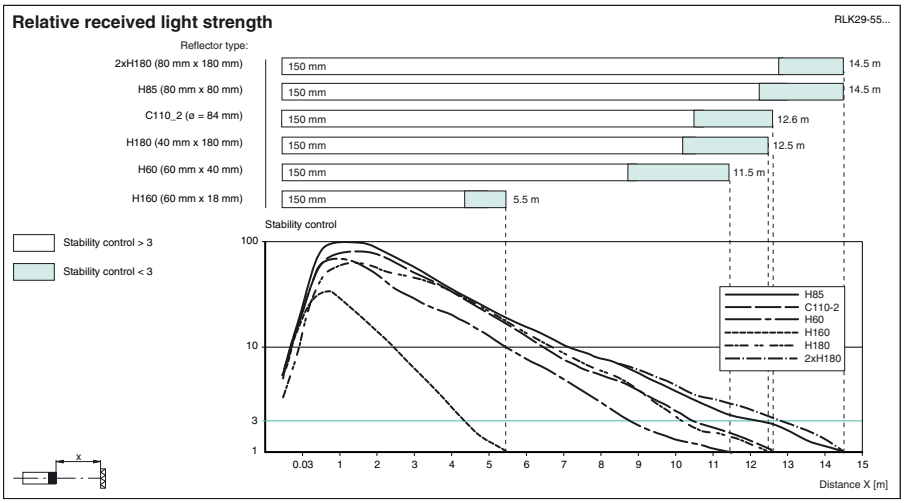

Release date: 2014-06-18 09:44 Date of issue: 2014-06-18 128118_eng.xml