DATASHEET - DILM12-10(24VDC)



Contactor, 3 pole, 380 V 400 V 5.5 kW, 1 N/O, 24 V DC, DC operation, Screw terminals

Powering Business Worldwide

Part no.	**DILM12-10(24VDC)**
Catalog No.	**276845**
Alternate Catalog No.	**XTCE012B10TD**
EL-Nummer (Norway)	**4130323**

Delivery program

Product range			Contactors
Application			Contactors for Motors
Subrange			Contactors up to 170 A, 3 pole
Utilization category			AC-1: Non-inductive or slightly inductive loads, resistance furnaces NAC-3: Normal AC induction motors: starting, switch off during running AC-4: Normal AC induction motors: starting, plugging, reversing, inching
			IE3
Notes			Also suitable for motors with efficiency class IE3. IE3-ready devices are identified by the logo on their packaging.
Connection technique			Screw terminals
Number of poles			3 pole
Rated operational current			
AC-3			
380 V 400 V	I_e	A	12
AC-1			
Conventional free air thermal current, 3 pole, 50 - 60 Hz			
Open			
at 40 °C	$I_{th} = I_e$	A	22
enclosed	I_{th}	A	18
Conventional free air thermal current, 1 pole			
open	I_{th}	A	50
enclosed	I_{th}	A	45
Max. rating for three-phase motors, 50 - 60 Hz			
AC-3			
220 V 230 V	P	kW	3.5
380 V 400 V	P	kW	5.5
660 V 690 V	P	kW	6.5
AC-4			
220 V 230 V	P	kW	2
380 V 400 V	P	kW	3
660 V 690 V	P	kW	4.4
Contacts			
N/O = Normally open			1 N/O
Contact sequence			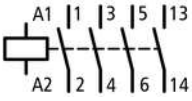
Instructions			Contacts to EN 50 012. Integrated varistor suppressor circuit.
Can be combined with auxiliary contact			DILM32-XHI.. DILA-XHI(V)..
Actuating voltage			24 V DC
Voltage AC/DC			DC operation
Connection to SmartWire-DT			yes in conjunction with DIL-SWD SmartWire DT contactor module

Technical data

General

Standards			IEC/EN 60947, VDE 0660, UL, CSA
Lifespan, mechanical			
DC operated	Operations	x 10^6	10
Operating frequency, mechanical			
DC operated	Operations/h		9000
Climatic proofing			Damp heat, constant, to IEC 60068-2-78 Damp heat, cyclic, to IEC 60068-2-30
Ambient temperature			
Open		°C	-25 - +60
Enclosed		°C	- 25 - 40
Storage		°C	- 40 - 80
Mounting position			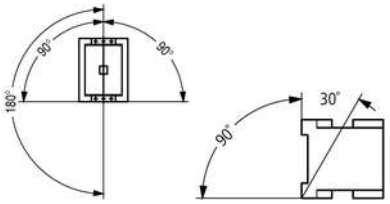
Mechanical shock resistance (IEC/EN 60068-2-27)			
Half-sinusoidal shock, 10 ms			
Main contacts			
N/O contact		g	10
Auxiliary contacts			
N/O contact		g	7
N/C contact		g	5
Mechanical shock resistance (IEC/EN 60068-2-27) when tabletop-mounted			
Half-sinusoidal shock, 10 ms			
Main contacts			
N/O contact		g	5.7
Auxiliary contacts			
N/O contact		g	3.4
N/C contact		g	3.4
Degree of Protection			IP20
Protection against direct contact when actuated from front (EN 50274)			Finger and back-of-hand proof
Weight			
DC operated		kg	0.296
Screw connector terminals			
Terminal capacity main cable			
Solid		mm^2	1 x (0.75 - 4) 2 x (0.75 - 2.5)
Flexible with ferrule		mm^2	1 x (0.75 - 2.5) 2 x (0.75 - 2.5)
Solid or stranded		AWG	single 18 - 10, double 18 - 14
Stripping length		mm	10
Terminal screw			M3.5
Tightening torque		Nm	1.2
Tool			
Pozidriv screwdriver		Size	2
Standard screwdriver		mm	0.8 x 5.5 1 x 6
Terminal capacity control circuit cables			
Solid		mm^2	1 x (0.75 - 4) 2 x (0.75 - 2.5)
Flexible with ferrule		mm^2	1 x (0.75 - 2.5) 2 x (0.75 - 2.5)
Solid or stranded		AWG	18 - 14
Stripping length		mm	10

Terminal screw			M3.5
Tightening torque		Nm	1.2
Tool			
Pozidriv screwdriver		Size	2
Standard screwdriver		mm	0.8 x 5.5 1 x 6

Main conducting paths

Rated impulse withstand voltage	U_{imp}	V AC	8000
Overvoltage category/pollution degree			III/3
Rated insulation voltage	U_i	V AC	690
Rated operational voltage	U_e	V AC	690
Safe isolation to EN 61140			
between coil and contacts		V AC	400
between the contacts		V AC	400
Making capacity (p.f. to IEC/EN 60947)			
	Up to 690 V	A	168
Breaking capacity			
220 V 230 V		A	120
380 V 400 V		A	120
500 V		A	100
660 V 690 V		A	70
Short-circuit rating			
Short-circuit protection maximum fuse			
Type “2” coordination			
400 V	gG/gL 500 V	A	20
690 V	gG/gL 690 V	A	20
Type “1” coordination			
400 V	gG/gL 500 V	A	35
690 V	gG/gL 690 V	A	25

AC

AC-1			
Rated operational current			
Conventional free air thermal current, 3 pole, 50 - 60 Hz			
Open			
at 40 °C	$I_{th} = I_e$	A	22
at 50 °C	$I_{th} = I_e$	A	21
at 55 °C	$I_{th} = I_e$	A	21
at 60 °C	$I_{th} = I_e$	A	20
enclosed	I_{th}	A	18
Conventional free air thermal current, 1 pole			
open	I_{th}	A	50
enclosed	I_{th}	A	45
AC-3			
Rated operational current			
Open, 3-pole: 50 – 60 Hz			
220 V 230 V	I_e	A	12
240 V	I_e	A	12
380 V 400 V	I_e	A	12
415 V	I_e	A	12
440V	I_e	A	12
500 V	I_e	A	10
660 V 690 V	I_e	A	7
380 V 400 V	I_e	A	12
Motor rating	P	kWh	
220 V 230 V	P	kW	3.5

240V	P	kW	4
380 V 400 V	P	kW	5.5
415 V	P	kW	7
440 V	P	kW	7.5
500 V	P	kW	7
660 V 690 V	P	kW	6.5
AC-4			
Open, 3-pole: 50 – 60 Hz			
220 V 230 V	I_e	A	7
240 V	I_e	A	7
380 V 400 V	I_e	A	7
415 V	I_e	A	7
440 V	I_e	A	7
500 V	I_e	A	6
660 V 690 V	I_e	A	5
Motor rating	P	kWh	
220 V 230 V	P	kW	2
240 V	P	kW	2.2
380 V 400 V	P	kW	3
415 V	P	kW	3.4
440 V	P	kW	3.6
500 V	P	kW	3.5
660 V 690 V	P	kW	4.4

DC

Rated operational current, open			
DC-1			
60 V	I_e	A	20
110 V	I_e	A	20
220 V	I_e	A	15

Current heat loss

3 pole, at I_{th} (60°)		W	4.2
Current heat loss at I_e to AC-3/400 V		W	1.5
Impedance per pole		mΩ	4.6

Magnet systems

Voltage tolerance			
DC operated	Pick-up	x U_c	0.8 - 1.1
Notes			0.85 - 1.1 only with auxiliary contact module with 3 or more N/C contacts 0.7 – 1.3 without auxiliary contact module and at ambient air temperature + +40 °C
DC operated	Drop-out	x U_c	0.15 - 0.6
Notes			at least smoothed two-phase bridge rectifier or three-phase rectifier
Power consumption of the coil in a cold state and 1.0 x U_S			
DC operated	Pick-up	W	4.5
DC operated	Sealing	W	4.5
Duty factor		% DF	100
Changeover time at 100 % U_S (recommended value)			
Main contacts			
DC operated		ms	
Closing delay		ms	31
Opening delay		ms	12
Arcing time		ms	10

Electromagnetic compatibility (EMC)

Emitted interference			according to EN 60947-1
Interference immunity			according to EN 60947-1

Rating data for approved types

Switching capacity			
Maximum motor rating			

Three-phase		
200 V 208 V	HP	3
230 V 240 V	HP	3
460 V 480 V	HP	10
575 V 600 V	HP	10
Single-phase		
115 V 120 V	HP	1
230 V 240 V	HP	2
General use	A	20
Auxiliary contacts		
Pilot Duty		
AC operated		A600
DC operated		P300
General Use		
AC	V	600
AC	A	10
DC	V	250
DC	A	1
Short Circuit Current Rating	SCCR	
Basic Rating		
SCCR	kA	5
max. Fuse	A	45
max. CB	A	60
480 V High Fault		
SCCR (fuse)	kA	30/100
max. Fuse	A	25 Class RK5/45 Class J
600 V High Fault		
SCCR (fuse)	kA	30/100
max. Fuse	A	25 Class RK5/45 Class J
Special Purpose Ratings		
Electrical Discharge Lamps (Ballast)		
480V 60Hz 3phase, 277V 60Hz 1phase	A	20
600V 60Hz 3phase, 347V 60Hz 1phase	A	20
Incandescent Lamps (Tungsten)		
480V 60Hz 3phase, 277V 60Hz 1phase	A	14
600V 60Hz 3phase, 347V 60Hz 1phase	A	14
Resistance Air Heating		
480V 60Hz 3phase, 277V 60Hz 1phase	A	20
600V 60Hz 3phase, 347V 60Hz 1phase	A	20
Refrigeration Control (CSA only)		
LRA 480V 60Hz 3phase	A	60
FLA 480V 60Hz 3phase	A	10
LRA 600V 60Hz 3phase	A	60
FLA 600V 60Hz 3phase	A	10
Definite Purpose Ratings (100,000 cycles acc. to UL 1995)		
LRA 480V 60Hz 3phase	A	72
FLA 480V 60Hz 3phase	A	12
Elevator Control		
200V 60Hz 3phase	HP	2
200V 60Hz 3phase	A	7.8
240V 60Hz 3phase	HP	2
240V 60Hz 3phase	A	6.8

480V 60Hz 3phase		HP	7.5
480V 60Hz 3phase		A	11
600V 60Hz 3phase		HP	7.5
600V 60Hz 3phase		A	9

Design verification as per IEC/EN 61439

Technical data for design verification			
Rated operational current for specified heat dissipation	I_n	A	12
Heat dissipation per pole, current-dependent	P_{vid}	W	0.5
Equipment heat dissipation, current-dependent	P_{vid}	W	0
Static heat dissipation, non-current-dependent	P_{vs}	W	4.5
Heat dissipation capacity	P_{diss}	W	0
Operating ambient temperature min.		°C	-25
Operating ambient temperature max.		°C	60
IEC/EN 61439 design verification			
10.2 Strength of materials and parts			
10.2.2 Corrosion resistance			Meets the product standard's requirements.
10.2.3.1 Verification of thermal stability of enclosures			Meets the product standard's requirements.
10.2.3.2 Verification of resistance of insulating materials to normal heat			Meets the product standard's requirements.
10.2.3.3 Verification of resistance of insulating materials to abnormal heat and fire due to internal electric effects			Meets the product standard's requirements.
10.2.4 Resistance to ultra-violet (UV) radiation			Meets the product standard's requirements.
10.2.5 Lifting			Does not apply, since the entire switchgear needs to be evaluated.
10.2.6 Mechanical impact			Does not apply, since the entire switchgear needs to be evaluated.
10.2.7 Inscriptions			Meets the product standard's requirements.
10.3 Degree of protection of ASSEMBLIES			Does not apply, since the entire switchgear needs to be evaluated.
10.4 Clearances and creepage distances			Meets the product standard's requirements.
10.5 Protection against electric shock			Does not apply, since the entire switchgear needs to be evaluated.
10.6 Incorporation of switching devices and components			Does not apply, since the entire switchgear needs to be evaluated.
10.7 Internal electrical circuits and connections			Is the panel builder's responsibility.
10.8 Connections for external conductors			Is the panel builder's responsibility.
10.9 Insulation properties			
10.9.2 Power-frequency electric strength			Is the panel builder's responsibility.
10.9.3 Impulse withstand voltage			Is the panel builder's responsibility.
10.9.4 Testing of enclosures made of insulating material			Is the panel builder's responsibility.
10.10 Temperature rise			The panel builder is responsible for the temperature rise calculation. Eaton will provide heat dissipation data for the devices.
10.11 Short-circuit rating			Is the panel builder's responsibility. The specifications for the switchgear must be observed.
10.12 Electromagnetic compatibility			Is the panel builder's responsibility. The specifications for the switchgear must be observed.
10.13 Mechanical function			The device meets the requirements, provided the information in the instruction leaflet (IL) is observed.

Technical data ETIM 7.0

Low-voltage industrial components (EG000017) / Power contactor, AC switching (EC000066)			
Electric engineering, automation, process control engineering / Low-voltage switch technology / Contactor (LV) / Power contactor, AC switching (ecl@ss10.0.1-27-37-10-03 [AAB718015])			
Rated control supply voltage Us at AC 50HZ		V	0 - 0
Rated control supply voltage Us at AC 60HZ		V	0 - 0
Rated control supply voltage Us at DC		V	24 - 24
Voltage type for actuating			DC
Rated operation current Ie at AC-1, 400 V		A	22
Rated operation current Ie at AC-3, 400 V		A	12
Rated operation power at AC-3, 400 V		kW	5.5
Rated operation current Ie at AC-4, 400 V		A	7
Rated operation power at AC-4, 400 V		kW	3
Rated operation power NEMA		kW	7.4

Modular version	No
Number of auxiliary contacts as normally open contact	1
Number of auxiliary contacts as normally closed contact	0
Type of electrical connection of main circuit	Screw connection
Number of normally closed contacts as main contact	0
Number of main contacts as normally open contact	3

Approvals

Product Standards	IEC/EN 60947-4-1; UL 60947-4-1; CSA - C22.2 No. 60947-4-1-14; CE marking
UL File No.	E29096
UL Category Control No.	NLDX
CSA File No.	012528
CSA Class No.	2411-03, 3211-04
North America Certification	UL listed, CSA certified
Specially designed for North America	No

Characteristics

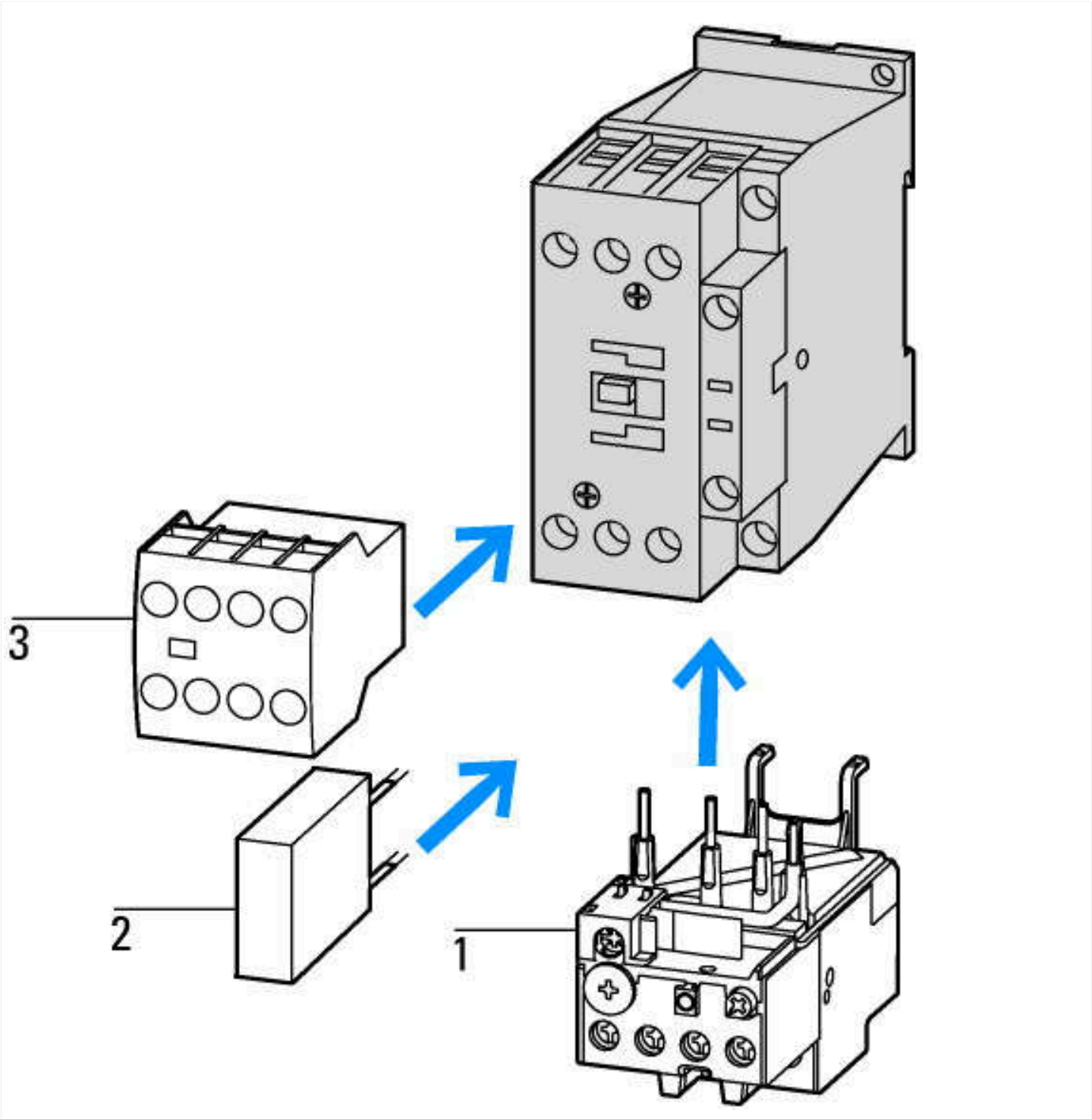

1: Overload relay
2: Suppressor
3: Auxiliary contact modules

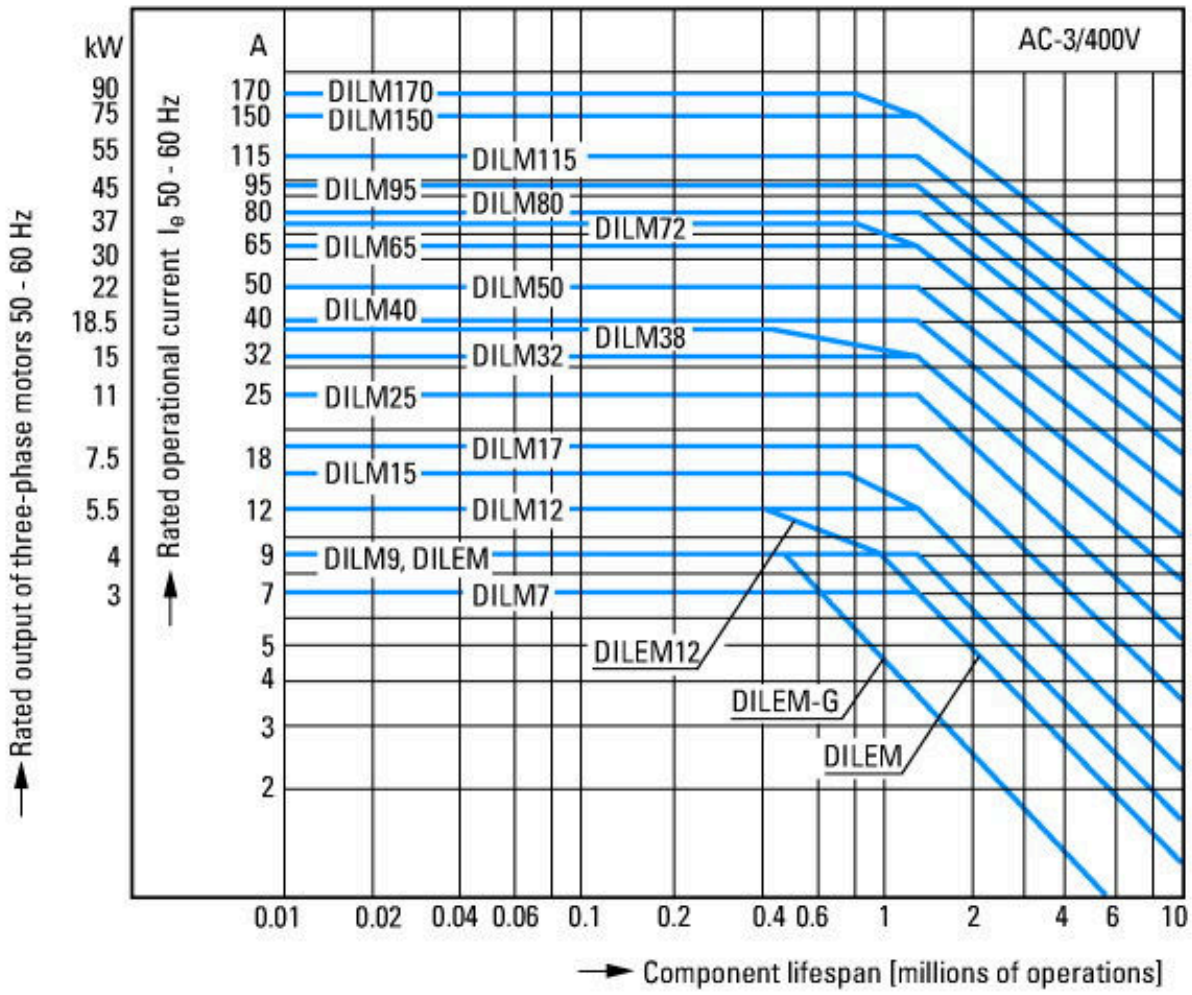

Squirrel-cage motor
Operating characteristics
Starting:from rest
Stopping:after attaining full running speed
Electrical characteristics
Make: up to 6 x rated motor current
Break: up to 1 x rated motor current
Utilization category
100 % AC-3
Typical applications
Compressors
Lifts
Mixers
Pumps
Escalators
Agitators
Fans
Conveyor belts
Centrifuges
Hinged flaps
Bucket-elevators
Air conditioning system
General drives in manufacturing and processing machines

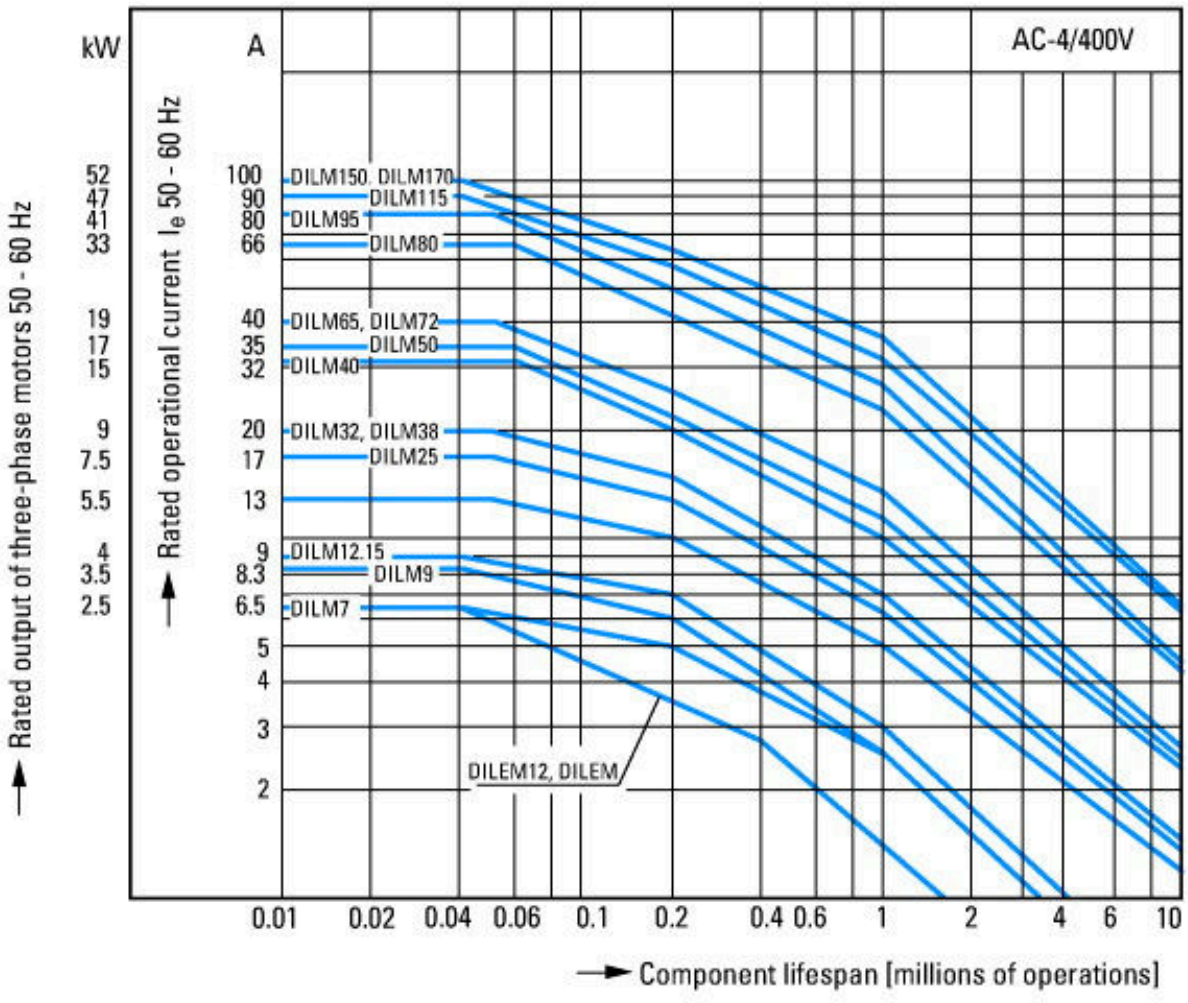

Extreme switching duty
Squirrel-cage motor
Operating characteristics
Inching, plugging, reversing
Electrical characteristics
Make: up to 6 x rated motor current
Break: up to 6 x rated motor current
Utilization category
100 % AC-4
Typical applications
Printing presses
Wire-drawing machines
Centrifuges
Special drives for manufacturing and processing machines

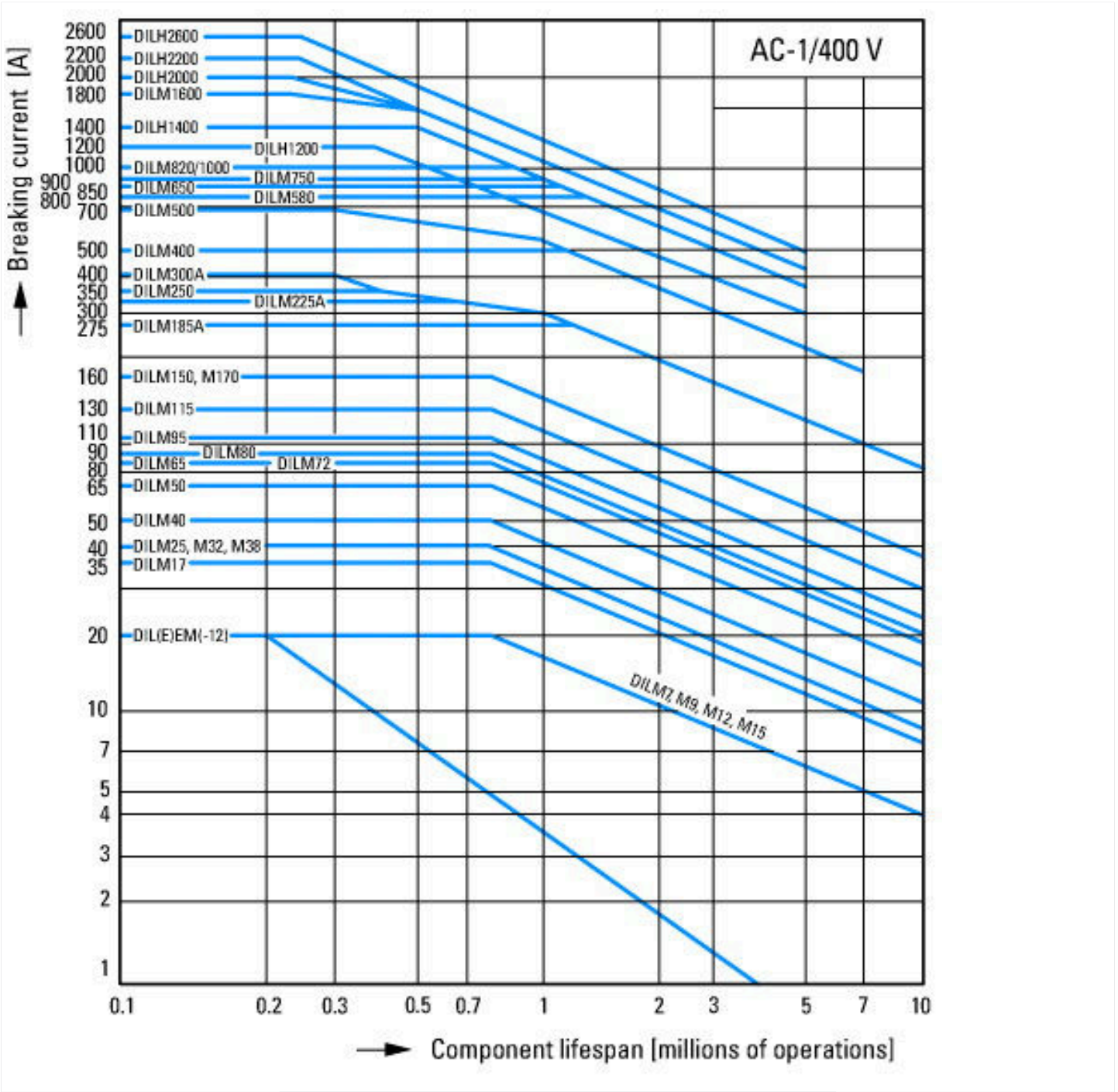

Switching conditions for non-motor consumers, 3 pole, 4 pole
Operating characteristics
Non inductive and slightly inductive loads
Electrical characteristics
Switch on: 1 x rated operational current
Switch off: 1 x rated operational current
Utilization category
100 % AC-1
Typical examples of application
Electric heat

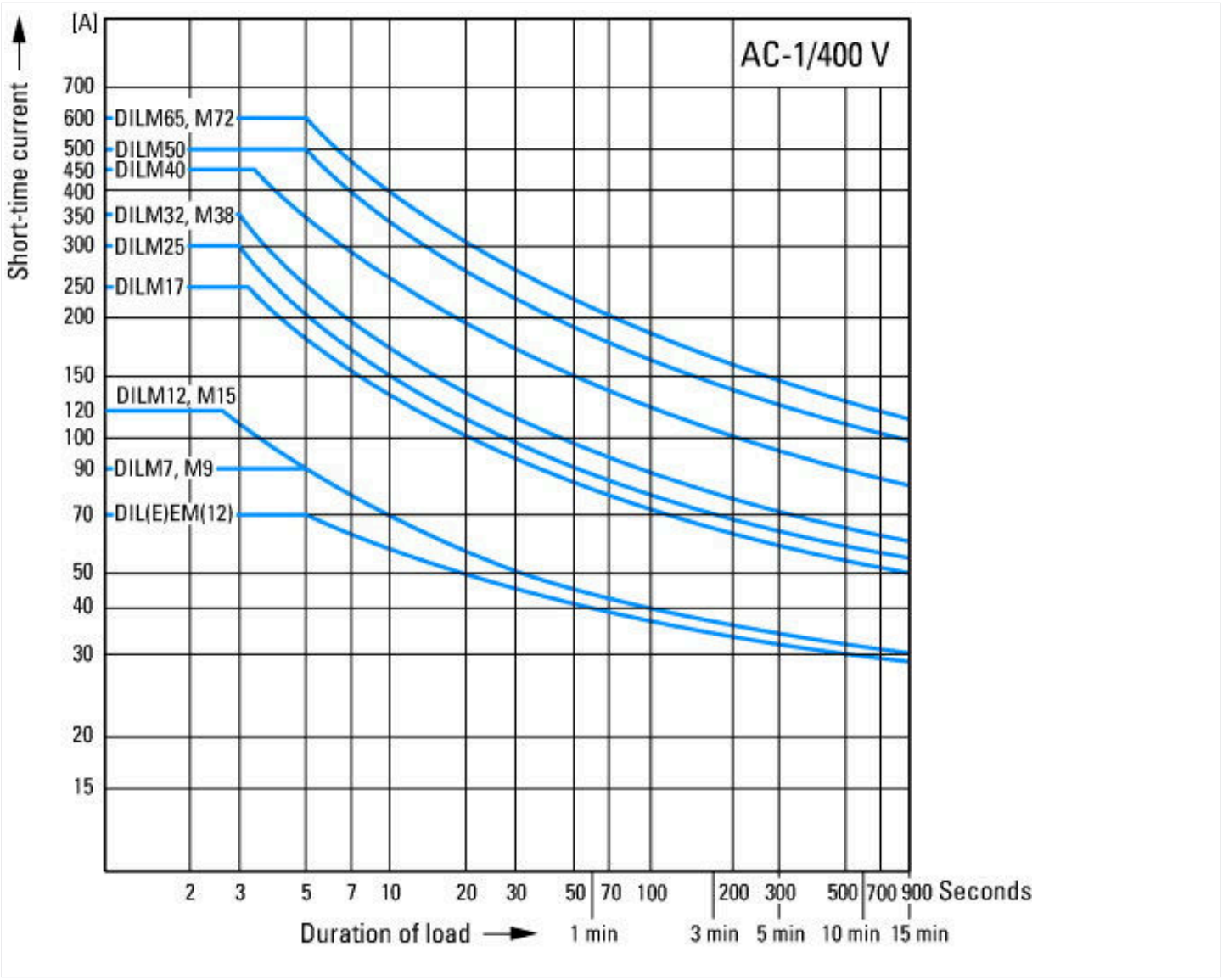

Dimensions

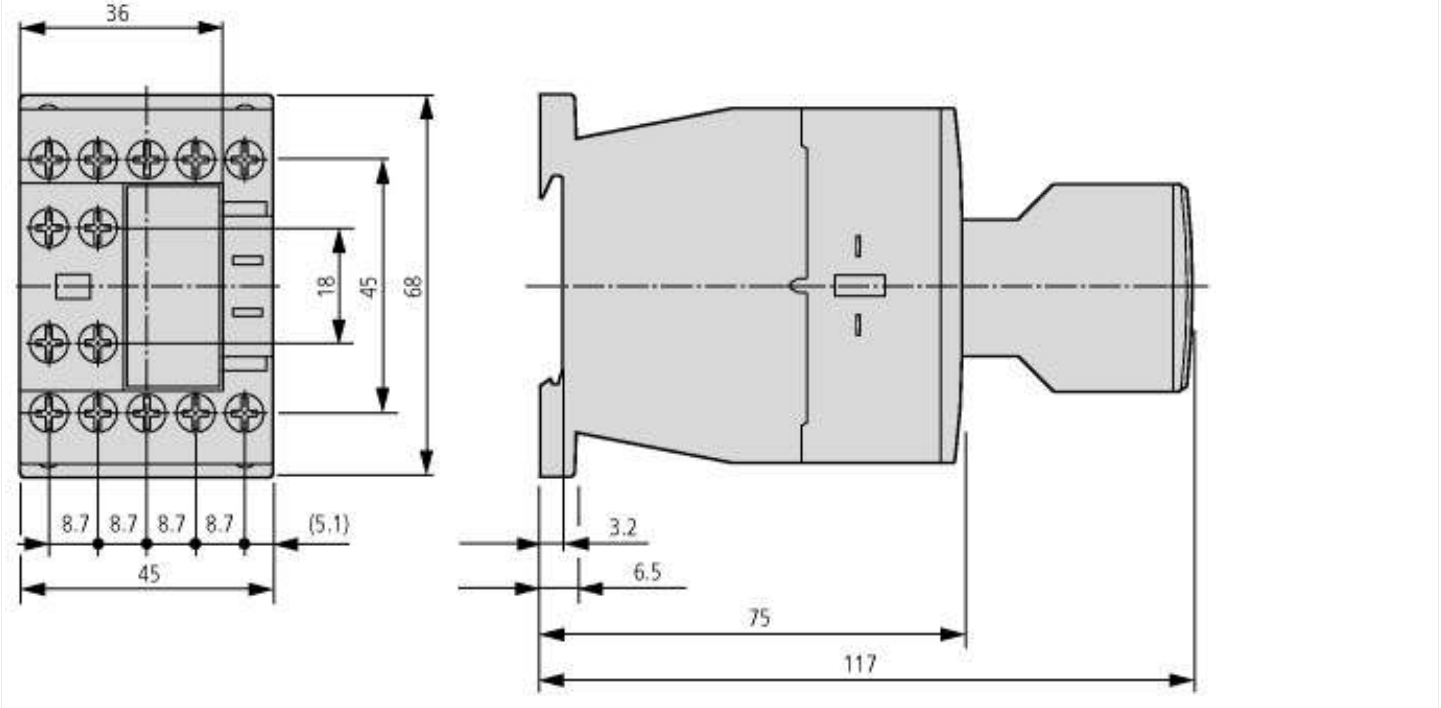

Contactor with auxiliary contact module DILM32-XHI.../DILA-XHI...

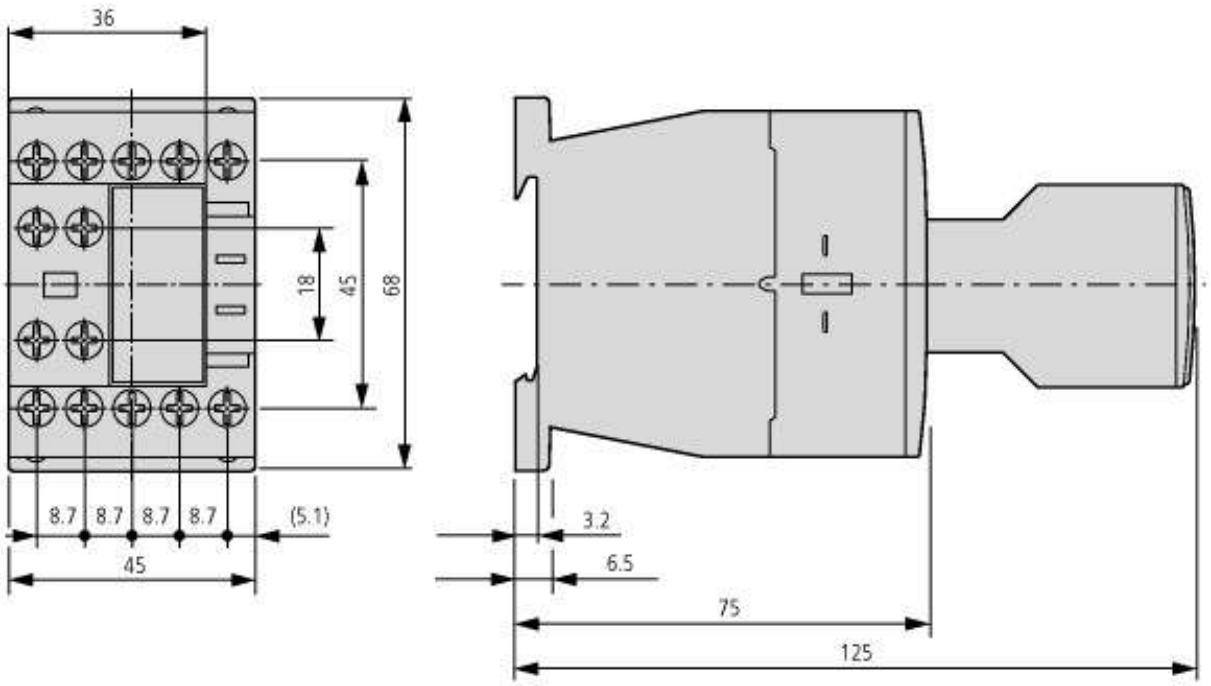

Contactor with auxiliary contact module DILA-XHIT…

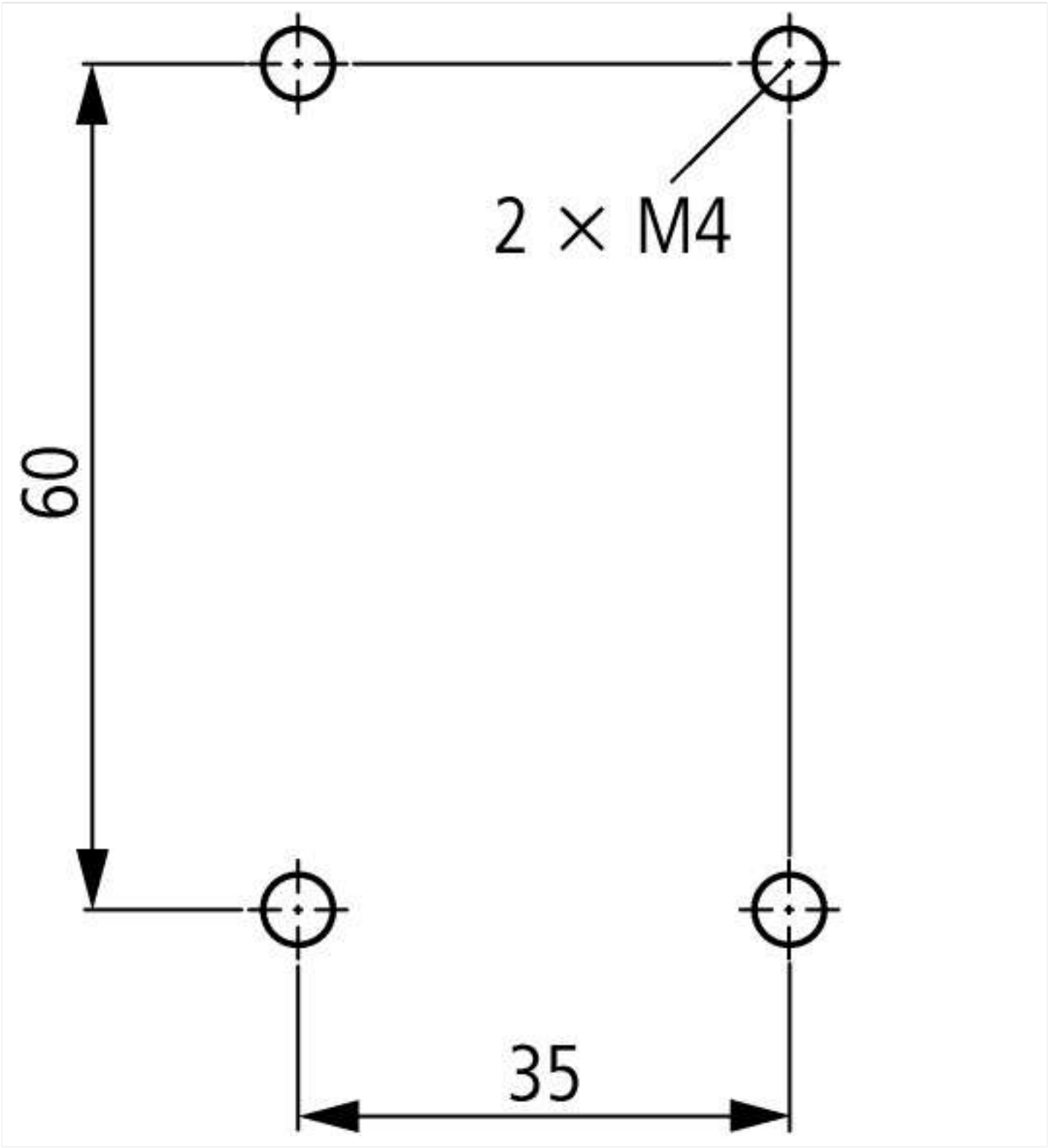

Assets (links)

Declaration of CE Conformity

00002875

Instruction Leaflets

IL03407013Z2018_07

© 10/2019 by Eaton Industries GmbH