120x120x38 mm

93.0~138.0 CFM



Specifications

MAGLev by SUNON	Bearing	Rating Voltage	Power Current	Power Consumption	Speed	Air Flow	Static Pressure	Noise	Weight	Curve
	● VAPO	(VDC)	(mA)	(WATTS)	(RPM)	(CFM)	(Inch-H_2O)	(dB(A))	(g)	
MEC0381V1-000U-A99	●	12	833	10.0	3100	138.0	0.36	48.0	218.0	1
MEC0381V2-000U-A99	●	12	421	5.1	2600	116.0	0.26	44.0	218.0	2
MEC0381V3-000U-A99	●	12	241	2.9	2100	93.0	0.18	37.0	218.0	3
MEC0382V1-000U-A99	●	24	383	9.2	3100	138.0	0.36	48.0	218.0	1
MEC0382V2-000U-A99	●	24	224	5.4	2600	116.0	0.26	44.0	218.0	2
MEC0382V3-000U-A99	●	24	130	3.1	2100	93.0	0.18	37.0	218.0	3
MEC0384V1-000U-A99	●	48	203	9.7	3100	138.0	0.36	48.0	218.0	1
MEC0384V2-000U-A99	●	48	120	5.8	2600	116.0	0.26	44.0	218.0	2
MEC0384V3-000U-A99	●	48	69	3.3	2100	93.0	0.18	37.0	218.0	3

Model	Bearing	Rating Voltage	Power Current	Power Consumption	Speed	Air Flow	Static Pressure	Noise	Weight	Curve
	◔ 2BALL ○ Sleeve	(VDC)	(mA)	(WATTS)	(RPM)	(CFM)	(Inch-H_2O)	(dB(A))	(g)	
EEC0381B1-000U-A99	◔	12	833	10.0	3100	138.0	0.36	48.0	214.0	1
EEC0381B2-000U-A99	◔	12	421	5.1	2600	116.0	0.26	44.0	214.0	2
EEC0381B3-000U-A99	◔	12	241	2.9	2100	93.0	0.18	37.0	214.0	3
EEC0382B1-000U-A99	◔	24	383	9.2	3100	138.0	0.36	48.0	214.0	1
EEC0382B2-000U-A99	◔	24	224	5.4	2600	116.0	0.26	44.0	214.0	2
EEC0382B3-000U-A99	◔	24	130	3.1	2100	93.0	0.18	37.0	214.0	3
EEC0384B1-000U-A99	◔	48	203	9.7	3100	138.0	0.36	48.0	214.0	1
EEC0384B2-000U-A99	◔	48	120	5.8	2600	116.0	0.26	44.0	214.0	2
EEC0384B3-000U-A99	◔	48	69	3.3	2100	93.0	0.18	37.0	214.0	3

Air Flow-Static Pressure Characteristics

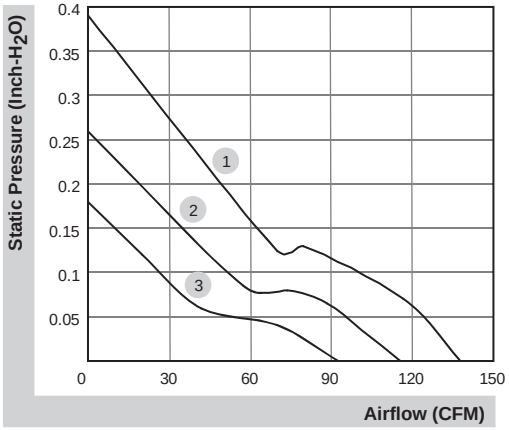

External dimensions(mm)

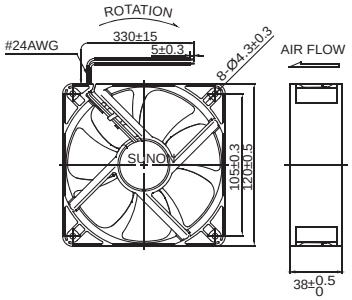

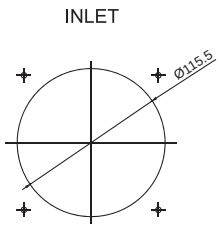

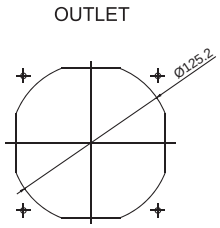

*All model could be customized. Please contact with Sunon Sales.
*Specifications are subject to change without notice. Please Visit SUNON website at http://www.sunon.com for update information.