Rectangular Bell Mounts - Type CCFQ

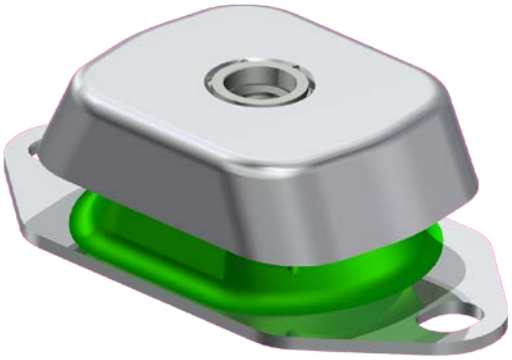



Applications

- Gensets
- Marine Engines
- Diesel Engines
- Pumps
- HVAC

The CCFQ range of mounts offer a low profile, easy to install design with an integral fail-safe device to provide shock and failure protection for mobile, marine or seismic stationery applications.

When the rubber works in shear and compression, it provides large static deflections, low natural frequencies (to 8 Hz) and high isolation.

Our CCFQ range is designed with a fail-safe function making it an ideal solution for applications where safety is paramount

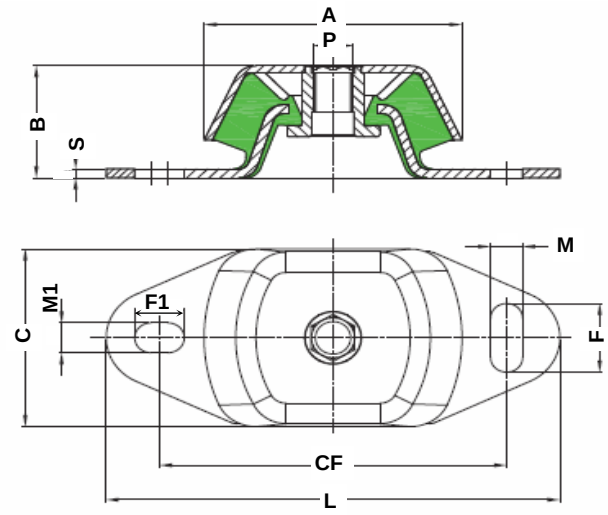

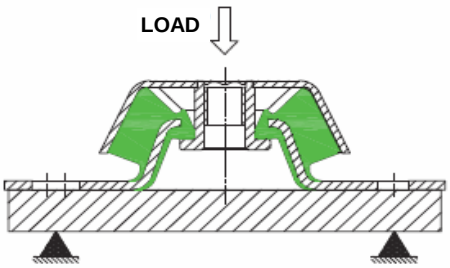

RS Ref:	Fibet Ref:	Hardness (IRHD)	A (mm)	B (mm)	C (mm)	P (mm)	FxM (F1XM1) (mm)	CF (mm)	L (mm)	S (mm)	Average Stiffness (daN/mm)	Maximum Load (daN)	Maximum Deflection (mm)
720-3372	CCFQ804012W	45	80	38	60	M12	14 x 11	100	120	3	9.0	36.0	4.0
720-3376	CCFQ804012M	60	80	38	60	M12	14 x 11	100	120	3	16.0	64.0	4.0
720-3385	CCFQ804012H	70	80	38	60	M12	14 x 11	100	120	3	24.0	96.0	4.0
201-2329	CCFQ1045016XW	45	104	49	75	M16	30 x 13 (20 X 13)	140	183	4	16.0	80.0	5.0
720-3388	CCFQ1045016W	45	104	49	75	M16	30 x 13 (20 X 13)	140	183	4	24.0	120.0	5.0
720-3382	CCFQ1045016M	60	104	49	75	M16	30 x 13 (20 X 13)	140	183	4	38.0	190.0	5.0
720-3391	CCFQ1045016H	70	104	49	75	M16	30 x 13 (20 X 13)	140	183	4	60.0	300.0	5.0
720-3394	CCFQ1307020W	45	132	71	112	M20	34 x 18 (26 X 18)	182	230	5	55.0	330.0	6.0
720-3398	CCFQ1307020M	60	132	71	112	M20	34 x 18 (26 X 18)	182	230	5	90.0	540.0	6.0
720-3408	CCFQ1307020H	70	132	71	112	M20	34 x 18 (26 X 18)	182	230	5	135.0	810.0	6.0