PRODUCT DETAILS

**ARTICLE: 22255FB**

# WHEEL N 100X30/40 PLAIN BORE BOLT HOLE F.12 FORK M22



## Wheel series N

Wheels with injected polyurethane coating 58 Sh.D on polyamide 6 center. Available with standard shielded or stainless steel sealed precision ball bearings; standard or stainless steel roller bearings; plain bore.
Plain bore wheel.

## Castor series M22

M22 series, Medium-light pressed steel fork assemblies; swivel version has double ball raceways. Zincplated.

Sigle bolt hole fixing for bolt diam. 10-12 mm.

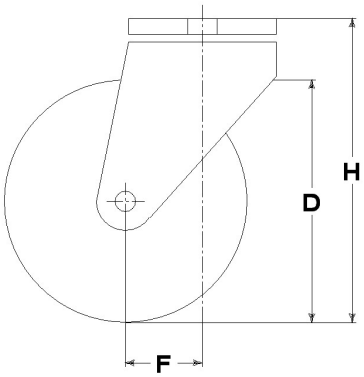


## Technical data

| | | |
|---|---|---|
| Wheel diameter | D | 100 mm |
| Tyre width | E | 30,0 mm |
| Bore diameter | d | 15 mm |
| Weight article | | 0,630 kg |
| Hub width | L | 40 mm |
| Overall height | H | 128 mm |
| Fixing bolt diameter | g | M10-12 |
| Offset | F | 37 mm |
| Fork width | U | 40 mm |
| Load Capacity | | 120 kg |

### Related Articles

Spare part wheel: 9068
Version with trailing brake: 22255FRFB

**GENERAL INFORMATION / RECOMMENDATIONS AND WARNINGS**
The cited text and the complete catalogue in their most up-dated versions are available in the OEM's website page www.lagspa.it/downloads. The dimensions, descriptions, specifications and illustrations herein are indicative and subject to variations without notice. The fact that products are illustrated herein does not necessarily imply they are available from stock nor does it place us under any obligation to supply them.
Tests carried out refer to the original products with original accessories: the replacement of one of the components with others of different manufacture might prevent the same results from being achieved and will automatically invalidate any guarantee. Please contact our technical service concerning any special application.