# THERMASREG® TR 04040

**Temperature controllers, two-step,
with switching output**

S+S REGELTECHNIK

Mechanical temperature controller / wet room temperature controller **THERM**ASREG® **TR 04040** with two independently switching outputs, which are separately adjustable (e.g. for switching between day and night time) and stainless steel capillary (spiral coil sensor), working without external voltage. It is used for monitoring and controlling temperatures in heat generation plants, in heating, ventilation and air conditioning systems, for ventilation, cooling and climate control in halls, cold storage rooms, greenhouses, nurseries, stables, breeding rooms, as industrial room thermostat or surface-mounted thermostat in industrial applications as well as in wet room and outdoor areas.

**TR 04040**



**TR 04040 U**



## TECHNICAL DATA

| | |
|---|---|
| Switching capacity:<br>(Contact load) | 24…250 V AC +10 %, 16 A, cos φ = 1.0<br>24…250 V AC +10 %, 1.5 A, cos φ = 0.6<br>at 24 V AC min. 150 mA |
| Contact: | dust-proof switch block unit as potential-free<br>single-pole changeover contact<br>(two changeover contacts, separately adjustable) |
| Housing: | plastic, UV-resistant,<br>material polyamide, 30 % glass-globe reinforced,<br>colour traffic white (similar to RAL 9016) |
| Housing dimensions: | 108 x 70 x 73.5 mm (Thor 2) |
| Cable gland: | 2x M 20 x 1.5; including strain relief |
| Housing temperature: | –10…+65 °C |
| Capillary: | stainless steel **V2A** (1.4303) |
| Tolerance: | $T_{min}$ ± 3 K; $T_{max}$ ± 3 K; at +20 °C ± 1K |
| Electrical connection: | 0.14 - 2.5 mm² via terminal screws |
| Routing: | admissible vibration load ≤ ½g |
| Protection class: | I (according to EN 60 730) |
| Protection type: | **IP 65** (according to EN 60 529) |
| Standards: | CE conformity, EMC directive 2014 / 30 / EU,<br>low-voltage directive 2014 / 35 / EU |

## FUNCTION

**Heating:** Contacts 2 - 3 and 5 - 6 break when temperature rises to the preset value.
**Cooling:** Contacts 2 - 1 and 5 - 4 break when temperature drops to the preset value.

Dimensional drawing **TR 04040**

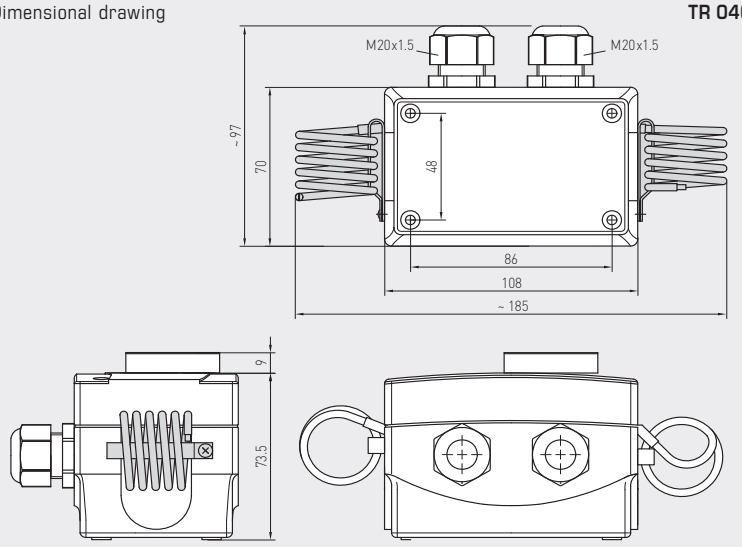


Connecting diagram **TR 04040**

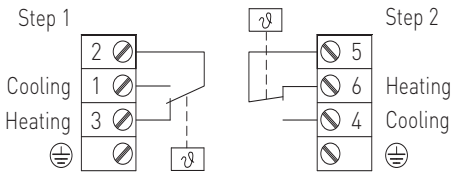


## THERMASREG® TR 04040 Temperature controllers, two-step

| Type / WG01 | Temperature Range (adjustable) 1. | 2. | Thermal Operating Difference (fixed) approx. 1. | 2. | Max. Capillary Temperature | Item No. | Price |
|---|---|---|---|---|---|---|---|
| **TR 04040** | | | | | | **TR + TW** (External / Internal setting) | |
| TR-04040 | 0…+40 °C | 0…+40 °C | 2 K | 2K | +65 °C | 1102-1050-1200-200 | **119,32 €** |
| **TR 04040 U** | | | | | | **TW + TW** (Internal setting) | |
| TR-04040 U | 0…+40 °C | 0…+40 °C | 2 K | 2K | +65 °C | 1102-1050-2200-200 | **119,32 €** |