DATASHEET - T5B-4-8902/I4





Similar to illustration

Changeoverswitches, T5B, 63 A, surface mounting, 4 contact unit(s), Contacts: 8, 60 °, maintained, With 0 (Off) position, Netz-0-Notstrom, design no. 8902

Part no.	**T5B-4-8902/I4**
Catalog No.	**207237**

Delivery program

Product range			Control switches
Part group reference			T5B
Basic function			Changeoverswitches
			with black thumb grip and front plate
Contacts			8
Degree of Protection			IP65
			totally insulated
Design			surface mounting
			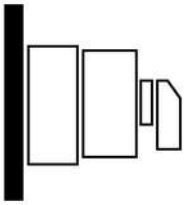
Contact sequence			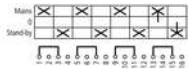
Switching angle		°	60
Switching performance			maintained With 0 (Off) position
Design number			8902
Front plate no.			 FS 161629
front plate			Netz-0-Notstrom
Motor rating AC-23A, 50 - 60 Hz			
400 V	P	kW	30
Rated uninterrupted current	I_u	A	63
Note on rated uninterrupted current I_u			Rated uninterrupted current I_u is specified for max. cross-section.
Number of contact units		contact unit(s)	4

Technical data

General

Standards			IEC/EN 60947, VDE 0660, IEC/EN 60204, CSA, UL Switch-disconnector according to IEC/EN 60947-3
Climatic proofing			Damp heat, constant, to IEC 60068-2-78 Damp heat, cyclic, to IEC 60068-2-30
Ambient temperature			

Enclosed		°C	-25 - +40
Overvoltage category/pollution degree			III/3
Rated impulse withstand voltage	U_{imp}	V AC	6000
Mechanical shock resistance		g	15
Mounting position			As required

Contacts

Electrical characteristics			
Rated operational voltage	U_e	V AC	690
Rated uninterrupted current	I_u	A	63
Note on rated uninterrupted current $!_u$			Rated uninterrupted current I_u is specified for max. cross-section.
Load rating with intermittent operation, class 12			
AB 25 % DF		x I_e	2
AB 40 % DF		x I_e	1.6
AB 60 % DF		x I_e	1.3
Short-circuit rating			
Fuse		A gG/gL	80
Rated short-time withstand current (1 s current)	I_{cw}	A_{rms}	1300
Note on rated short-time withstand current Icw			Current for a time of 1 second
Rated conditional short-circuit current	I_q	kA	2

Switching capacity

cos φ rated making capacity as per IEC 60947-3		A	800
Rated breaking capacity cos φ to IEC 60947-3		A	
230 V		A	520
400/415 V		A	600
500 V		A	480
690 V		A	340
Safe isolation to EN 61140			
between the contacts		V AC	440
Current heat loss per contact at I_e		W	4.5
Current heat loss per auxiliary circuit at I_e (AC-15/230 V)		CO	4.5
Lifespan, mechanical	Operations	x 10^6	> 0.5
Maximum operating frequency	Operations/h		1200
AC			
AC-3			
Rating, motor load switch	P	kW	
220 V 230 V	P	kW	15
230 V Star-delta	P	kW	18.5
400 V 415 V	P	kW	22
400 V Star-delta	P	kW	30
500 V	P	kW	22
500 V Star-delta	P	kW	37
690 V	P	kW	15
690 V Star-delta	P	kW	22
Rated operational current motor load switch			
230 V	I_e	A	51
230 V star-delta	I_e	A	63
400V 415 V	I_e	A	41
400 V star-delta	I_e	A	63
500 V	I_e	A	33
500 V star-delta	I_e	A	57.2
690 V	I_e	A	17
690 V star-delta	I_e	A	29.4
AC-23A			
Motor rating AC-23A, 50 - 60 Hz	P	kW	

230 V	P	kW	18.5
400 V 415 V	P	kW	30
500 V	P	kW	22
690 V	P	kW	22
Rated operational current motor load switch			
230 V	I_e	A	63
400 V 415 V	I_e	A	63
500 V	I_e	A	33
690 V	I_e	A	23.8
DC			
DC-1, Load-break switches L/R = 1 ms			
Rated operational current	I_e	A	63
Voltage per contact pair in series		V	60
DC-23A, motor load switch L/R = 15 ms			
24 V			
Rated operational current	I_e	A	50
Contacts		Quantity	1
48 V			
Rated operational current	I_e	A	50
Contacts		Quantity	2
60 V			
Rated operational current	I_e	A	50
Contacts		Quantity	3
120 V			
Rated operational current	I_e	A	25
Contacts		Quantity	3
240 V			
Rated operational current	I_e	A	20
Contacts		Quantity	6
DC-13, Control switches L/R = 50 ms			
Rated operational current	I_e	A	25
Voltage per contact pair in series		V	24
Control circuit reliability at 24 V DC, 10 mA	Fault probability	H_F	$< 10^{-5}$,< 1 failure in 100,000 switching operations

Terminal capacities

Solid or stranded		mm^2	1 x (2,5 - 35) 2 x (2,5 - 16)
Flexible with ferrules to DIN 46228		mm^2	1 x (1 - 25) 2 x (1.5 - 10)
Terminal screw			M6
Tightening torque for terminal screw		Nm	4

Technical safety parameters:

Notes			$B10_d$ values as per EN ISO 13849-1, table C1

Rating data for approved types

Contacts			
Rated operational voltage	U_e	V AC	600
Rated uninterrupted current max.			
Main conducting paths			
General use		A	63
Switching capacity			
Maximum motor rating			
Single-phase			
120 V AC		HP	3
200 V AC		HP	7.5
240 V AC		HP	10
Three-phase			

200 V AC		HP	15
240 V AC		HP	15
480 V AC		HP	40
600 V AC		HP	40
Short Circuit Current Rating		SCCR	
High fault rating		kA	10
max. Fuse		A	100, Class J
Terminal capacity			
Solid or flexible conductor with ferrule		AWG	12 - 4
Terminal screw			M6
Tightening torque		lb-in	35.4

Design verification as per IEC/EN 61439

Technical data for design verification			
Rated operational current for specified heat dissipation	I_n	A	63
Heat dissipation per pole, current-dependent	P_{vid}	W	4.5
Equipment heat dissipation, current-dependent	P_{vid}	W	0
Static heat dissipation, non-current-dependent	P_{vs}	W	0
Heat dissipation capacity	P_{diss}	W	0
Operating ambient temperature min.		°C	-25
Operating ambient temperature max.		°C	40
IEC/EN 61439 design verification			
10.2 Strength of materials and parts			
10.2.2 Corrosion resistance			Meets the product standard's requirements.
10.2.3.1 Verification of thermal stability of enclosures			Meets the product standard's requirements.
10.2.3.2 Verification of resistance of insulating materials to normal heat			Meets the product standard's requirements.
10.2.3.3 Verification of resistance of insulating materials to abnormal heat and fire due to internal electric effects			Meets the product standard's requirements.
10.2.4 Resistance to ultra-violet (UV) radiation			UV resistance only in connection with protective shield.
10.2.5 Lifting			Does not apply, since the entire switchgear needs to be evaluated.
10.2.6 Mechanical impact			Does not apply, since the entire switchgear needs to be evaluated.
10.2.7 Inscriptions			Meets the product standard's requirements.
10.3 Degree of protection of ASSEMBLIES			Does not apply, since the entire switchgear needs to be evaluated.
10.4 Clearances and creepage distances			Meets the product standard's requirements.
10.5 Protection against electric shock			Does not apply, since the entire switchgear needs to be evaluated.
10.6 Incorporation of switching devices and components			Does not apply, since the entire switchgear needs to be evaluated.
10.7 Internal electrical circuits and connections			Is the panel builder's responsibility.
10.8 Connections for external conductors			Is the panel builder's responsibility.
10.9 Insulation properties			
10.9.2 Power-frequency electric strength			Is the panel builder's responsibility.
10.9.3 Impulse withstand voltage			Is the panel builder's responsibility.
10.9.4 Testing of enclosures made of insulating material			Is the panel builder's responsibility.
10.10 Temperature rise			The panel builder is responsible for the temperature rise calculation. Eaton will provide heat dissipation data for the devices.
10.11 Short-circuit rating			Is the panel builder's responsibility. The specifications for the switchgear must be observed.
10.12 Electromagnetic compatibility			Is the panel builder's responsibility. The specifications for the switchgear must be observed.
10.13 Mechanical function			The device meets the requirements, provided the information in the instruction leaflet (IL) is observed.

Technical data ETIM 7.0

Low-voltage industrial components (EG000017) / Off-load switch (EC001105)			
Electric engineering, automation, process control engineering / Low-voltage switch technology / Off-load switch, circuit breaker, control switch / Changeover switch (ecl@ss10.0.1-27-37-14-05 [AKF062013])			
Model			Reverser
Number of poles			4

With 0 (off) position		Yes
With retraction in 0-position		No
Rated permanent current Iu	A	63
Rated operation current Ie at AC-3, 400 V	A	41
Rated operation power at AC-3, 400 V	kW	22
Degree of protection (IP), front side		IP65
Degree of protection (NEMA), front side		12
Number of auxiliary contacts as normally closed contact		0
Number of auxiliary contacts as normally open contact		0
Number of auxiliary contacts as change-over contact		0
Suitable for ground mounting		Yes
Suitable for front mounting 4-hole		No
Suitable for distribution board installation		No
Suitable for intermediate mounting		No
Complete device in housing		Yes
Material housing		Plastic
Type of control element		Toggle
Type of electrical connection of main circuit		Screw connection

Approvals

Product Standards	UL 60947-4-1;CSA - C22.2 No. 60947-4-1-14; CSA-C22.2 No. 94; IEC/EN 60947-3; CE marking
UL File No.	E36332
UL Category Control No.	NLRV
CSA File No.	12528
CSA Class No.	3211-05
North America Certification	UL listed, CSA certified
Specially designed for North America	Yes, additional labeling according to UL on the enclosure in combination with "+NA-I4" (105868)
Suitable for	Branch circuits, suitable as motor disconnect
Degree of Protection	IEC: IP65; UL/CSA Type 1, 12

Dimensions

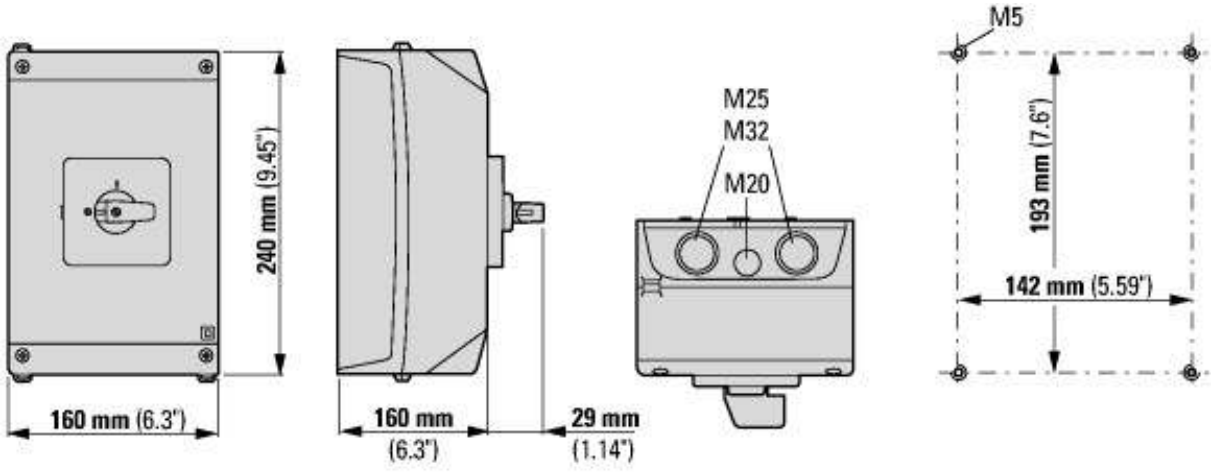

Cam switches T5B and T5 are of identical design, only their contacts are different

Additional product information (links)

Technical overview cam switch, switch-disconnector	http://de.ecat.moeller.net/flip-cat/?edition=HPLTEv1&startpage=4.2
System overview cam switch T	http://de.ecat.moeller.net/flip-cat/?edition=HPLTEv1&startpage=4.4
System overview switch-disconnector P	http://de.ecat.moeller.net/flip-cat/?edition=HPLTEv1&startpage=4.6
Key to part numbers Cam switch	http://de.ecat.moeller.net/flip-cat/?edition=HPLTEv1&startpage=4.8
Key to part numbers Switch-disconnector	http://de.ecat.moeller.net/flip-cat/?edition=HPLTEv1&startpage=4.8
Switches for ATEX	http://www.coopercrouse-hinds.eu/en/products/25-ex-safety-and-main-current-switches.html

© 05/2021 by Eaton Industries GmbH