E30500

Welding adapter for process sensors

WELDING ASEPTO ADAPT D38/G1

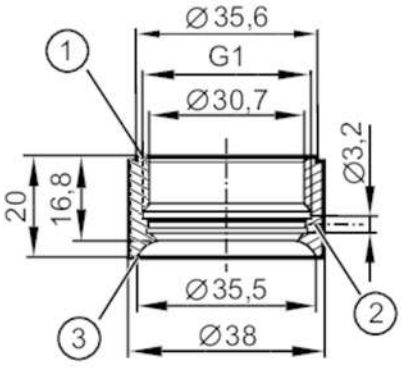

1 Aseptoflex Vario
2 Leakage port
3 sealing area

Application		
Design		with leakage port, for installation of LDL20x
Pressure rating	[bar]	50
Note on pressure rating		for the connection sensor - adapter
Tests / approvals		
Pressure Equipment Directive		A possible classification to PED depends on the application and has to be carried out by the user / operator.
Pressure Equipment Directive EAC		The adapter is intended for use in devices, machines and installations that do not fall under the categories of the technical rule TR CU 032/2013.
Safety instructions		The compatibility between medium and product material has to be checked in all applications.
Mechanical data		
Weight	[g]	113.8
Materials (wetted parts)		stainless steel (1.4435 / 316L) ; surface characteristics : Ra<0,4 / Rz 4
Sensor connection		G 1 Aseptoflex Vario
Process connection		welding adapter Ø 38 mm
Remarks		
Pack quantity		1 pcs.