Brand of NTN corporation

Technical data

UCPAE211

Bearing units



Grey cast housing, radial insert ball bearing with socket set screws,seal with slinger

KIT CONTENT

UC211G2, PAE211

VISUAL (S)

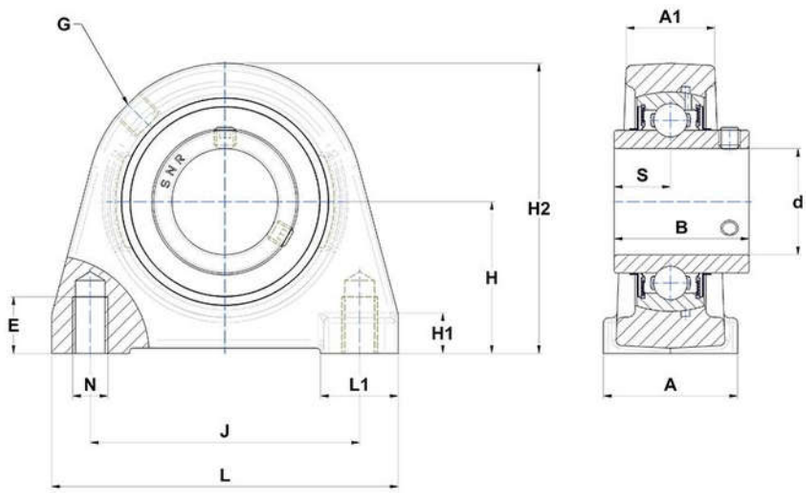

PRODUCT DEFINITION

Brand	SNR
A - Housing width	60 mm
A1 - Housing top width	35 mm
B - Width of Inner Ring	55,6 mm
d - Shaft diameter	55 mm
E - Mounting hole thread depth	20 mm

NTN Europe
1 rue des Usines · BP 2017 · 74010 Annecy Cedex · France · Tel. +33 (0)4 50 65 30 00
S.A. au capital de 322 639 919 € · RCS ANNECY B 325 821 072 · Id. Fiscale : FR 48 325 821 072
SIRET 325 821 072 00015 · Code APE 2815 Z · Code NACE 28.15

PRODUCT DEFINITION	
G - Grease fitting	R1/8"
H - Distance mounting base to centerline spheric. seating diam.	64 mm
H1 - Housing foot height	16 mm
H2 - Housing height	125 mm
J - Mounting holes distance	118 mm
L - Housing length	150 mm
L1 - Housing foot length	32 mm
N - Mounting hole dimension	M16
S - Distance front side/bearing centre	22,2 mm

PRODUCT PERFORMANCE	
C - Dynamic load rating	43550000 mN
C0 - Static load rating	29200000 mN
Operating temperature min.	253,15 °K
Operating temperature max.	373,15 °K

OTHER FEATURES	
Mass	3,12 kg
Recommended tightening torque for set screw	22 N-m