Littelfuse
Expertise Applied | Answers Delivered

HWB18 SEALED POWER DISTRIBUTION MODULE

Compact Hard-Wired PDM for 280 Style Components



Description

The HWB18 Compact Hard-Wired Box features 18 cavities that accept 2.8mm fuse and relay components and is the perfect fit for accessory circuits and overflow circuits from your main Power Distribution module. The HWB18 can hold plug-in components including MINI fuses, MINI format circuit breakers, 4-pin single throw relays, and 5-pin double throw relays. The HWB18 features durable construction, an IP67/IP69K rating, and a compact size. The user can customize their own circuitry utilizing direct wire-to-component connections which are crimped to the wire harness with grommets to seal the bottom of the module.

Features and Benefits

- Cover latches keep the cover sealed and securely in place.
- Accepts any mini (280 style) circuit protection component.
- Compact size allows the unit to be installed in vehicles with limited space.
- Ideal for accessory circuits, overflow circuits from main or as a main module on smaller vehicles.
- IP67/IP69K sealed units can be installed virtually anywhere on the vehicle and stands up to road splash and salt spray.
- TPAs (terminal position assurance locks) give secondary locking protection of the wire leads, which help keeps leads securely in place.
- Wires plug into the back of the unit using industry-standard Delphi Metri-Pack Series 280 tanged terminals.
- Available with or without steel mounting bracket. Module snaps into bracket, and is held at 30° angle or 90° angle (bracket dependent) to allow easy viewing and servicing
- Tethers available to prevent loss of cover during service.
- Optional grid on inside cover available; functions as relay retention insert
- HWB18, HWB12 & HWB6 share the same mounting bracket so electrical system modification can be performed without bracket or sheet metal alterations.
- A UL certification for this fuseholder means it can be used as a component in material handling and electric-battery-powered industrial truck applications with confidence that it meets the requirements of UL 583 standards.

Specifications Overview

Max Fuse Rating:	30A per circuit
Max Continuous Current:	100A
Number of Cavities	18
Operating Temp:	-40 °C to +105 °C
Ingress Protection:	IP67/IP69K

Applications

- Accessory circuits
- Overflow circuits
- Main unit on small vehicles

Web Resources

Download 2D print and technical resources at:
littelfuse.com/hwb18

Ordering Information

PART NUMBER	COVER		TPA	FOAM	UL	MOUNTING BRACKET
	BLACK	CLEAR				
PDM31001ZXM	•		•		•	30°
PDM31002ZXM	•		•		•	
PDM31003ZXM	•				•	
PDM31004ZXM	•		•	•	•	

UR file number: AU6325
TPA: Terminal Position Assurance secondary locks for wire terminals

Accessories and Service Parts

PART NUMBER	DESCRIPTION
868-965	Base
873-032	Cover
901-106	Cover seal
873-680	Tether
883-084	TPA
901-320	Foam
868-964	90° angle mounting bracket
868-068	30° angle mounting bracket

© 2017 Littelfuse Commercial Vehicle Products

HWB18 SEALED POWER DISTRIBUTION MODULE

Specifications

Max Fuse Rating	30A per circuit
Max Continuous Current	100A at 23 °C, 70A at 85 °C
Number of Cavities	18
Recommended Mounting	M6 bolt and lock washer
Mounting Bracket Torque	5.5-6.5 Nm
Temperature Range	-40 °C to +105 °C
Ingress Protection Rating	IP67/IP69K
Dimensions	80.4x69.8x45.2 mm
Wire Sizes	0.35-3.00 mm²
Mating Terminals & Seals	Delphi Metri-Pack 280 Sealed female (tanged) See chart below for details. Sold separately.
Accessories	Optional: Cover tether, mounting bracket, TPAs, 30° angle bracket, 90° angle bracket

Mating Terminals and Seals Compatibility

Wire Size Range (mm²)	Insulation Diameter (mm)	Terminal	Cable Seal	Cable Plug
0.50-0.35 mm²	1.84-2.51 mm	12084201	12089679 / 12041351	12010300
1.00-0.80 mm²	2.03-3.12 mm	12077411	12041351 / 12015323	
3.00-2.00 mm²	2.45-3.80 mm	12129493	12015323 / 12015359	

Sold separately. Available from Delphi.

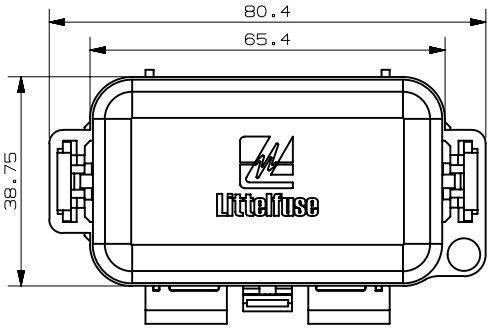

Dimensions in millimeters

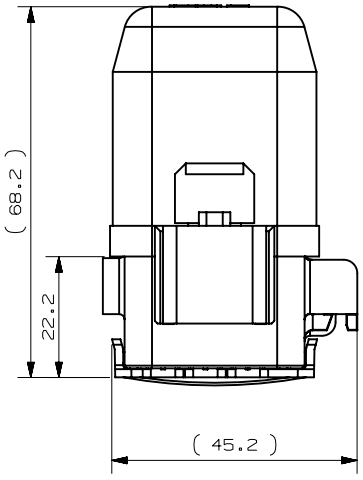

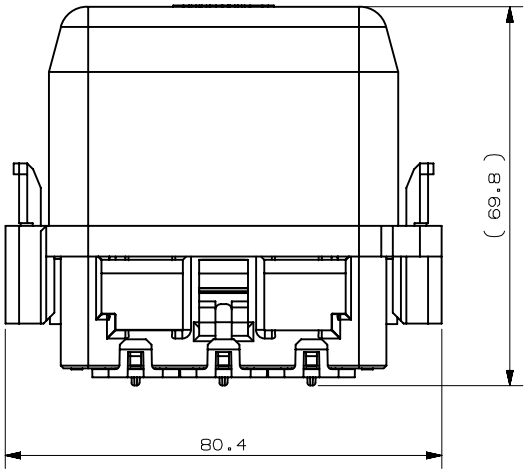

Visit **Littelfuse.com** for the most up-to-date product information. Littelfuse reserves the right to make product changes, without notice. Material in this document is as accurate as known at the time of publication.

© 2017 Littelfuse Commercial Vehicle Products