KI5030

Capacitive NAMUR sensor

KI-2015-N/NI/1D/1G

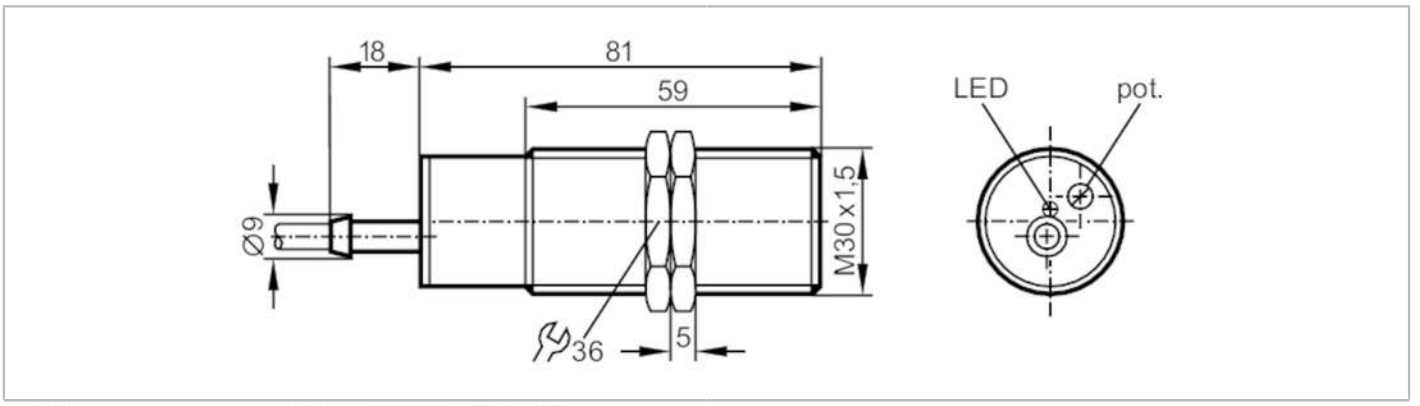

Product characteristics		
Electrical design		NAMUR
Output function		normally closed
Sensing range	[mm]	15
Housing		threaded type
Dimensions	[mm]	M30 x 1.5 / L = 81
Electrical data		
Connection to switching amplifiers		yes
Switching amplifiers		connection to certified intrinsically safe circuits with the max. values: U = 15 V / I = 50 mA / P = 120 mW
Nominal voltage DC	[V]	8.2; (1kΩ)
Supply voltage DC	[V]	7.5...15
Current consumption	[mA]	< 1; (disabled; conductive: > 2,2)
Protection class		II
Measuring principle		capacitive
Outputs		
Electrical design		NAMUR
Output function		normally closed
Switching frequency DC	[Hz]	40
Short-circuit proof		yes
Detection zone		
Sensing range	[mm]	15
Sensing range adjustable		yes
Factory setting sensing range	[mm]	15
Real sensing range Sr	[mm]	15 ± 10 %
Accuracy / deviations		
Correction factor		glass: 0.4 / water: 1 / ceramics: 0.2 / PVC: 0.2
Hysteresis	[% of Sr]	1...15
Switch point drift	[% of Sr]	-15...15
Operating conditions		
Ambient temperature	[°C]	-20...60

KI5030

Capacitive NAMUR sensor

KI-2015-N/NI/1D/1G

Protection			IP 65
Tests / approvals			
Approval			DMT 01 ATEX E 020; TIIS TC15627; IECEx BVS 06.0003
ATEX marking			II 1G Ex ia IIB T6 Ga
			II 1D Ex ia IIIC T90°C Da
EMC		IEC 60947-5-2	
MTTF	[years]		841
Safety classification			
Max. internal capacitance	[nF]		375
Max. internal inductance	[µH]		1
Mechanical data			
Weight	[g]		212.5
Housing			threaded type
Mounting			non-flush mountable
Dimensions	[mm]		M30 x 1.5 / L = 81
Thread designation			M30 x 1.5
Materials			PBT
Displays / operating elements			
Display		switching status	1 x LED, yellow
Remarks			
Pack quantity			1 pcs.
Electrical connection			

Cable: 2 m, PVC; 2 x 0.5 mm²

Connection

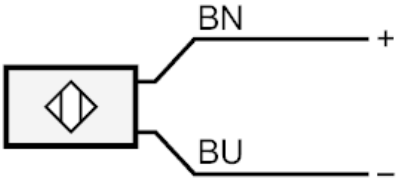

	Core colours :
BN =	brown
BU =	blue