SCHAEFFLER



ProLink Condition Monitoring System

We pioneer motion

PUBLIC

Agenda

1 **Technical details**

2 Accessories & Order numbers

3 Trainings

PUBLIC

All rights reserved to Schaeffler Automotive Buehl GmbH & Co. KG, in particular in case of grant of an IP right.

SCHAEFFLER

Main processing module

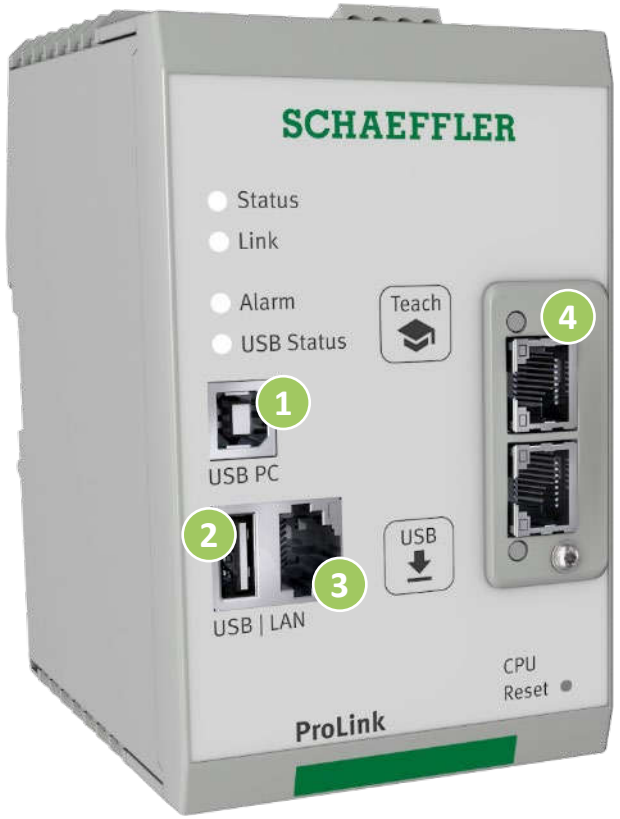

Technical data

Power supply		18-30 VDC (Typical: 24 VDC)
Power consumption		800 mA
Connections	1	1 USB B (Basic configuration, data download)
	2	1 USB A (Mass storage devices)
	3	1 PC/Ethernet 1000 Mb/s
	4	1 interface for fieldbus communication
Fieldbus interface (optional)		• Profinet • more to come
Display elements		Booting, Ready for operation, Failure
Mounting		35-mm standard mounting rail
Protection type		IP 20
Ambient temperature		Operation: -30°C to +60°C Storage: -30°C to +55°C
Certifications		CE, UKCA, EAC; UL/CSA (by using Power supply NEC Class-2)
Communication protocols	3	• WebServices • SLMP Client • OPC/UA Server • MQTT

PUBLIC

All rights reserved to Schaeffler Automotive Buehl GmbH & Co. KG, in particular in case of grant of an IP right.

Vibration module



Technical data	Max. 4 vibration modules
Power supply	18-30 VDC (Typical: 24 VDC)
Power consumption	400 mA
Input:	
Type:	4 voltage DC, AC, IEPE (time synchronous)
• **Range**	• +/-10 V
• **Resolution**	• 24 Bit
• **Sample rate**	• 51,2 kHz
• **Bandwidth:**	
• **DC**	• 0 Hz – 20 kHz
• **AC**	• 0,1 Hz – 20 kHz
• **IEPE**	• 0,1 Hz – 20 kHz
Type:	2 pulse inputs
• **Range**	• 0-24 VDC
• **Bandwidth**	• 0,1 Hz to 50 kHz • A/B coded (Speed and direction)
Output:	
Type:	4 switching outputs (Open collector)
• **Switching current**	• Max. each 500 mA
• **Reaction time**	• 1 ms
Display elements	Booting, Ready for operation, Sensor failure, Switching output active, Pulse input active
Mounting	35-mm standard mounting rail
Protection type	IP 20
Ambient temperature	Operating: -30°C to +60°C Storage: -30°C to +55°C
Certifications	CE, UKCA, EAC UL/CSA (by using Power supply NEC Class-2)

PUBLIC

All rights reserved to Schaeffler Automotive Buehl GmbH & Co. KG, in particular in case of grant of an IP right.

SCHAEFFLER

Input/Output module



Technical data	Max. 4 I/O modules (input/output modules)	
Power supply	18-30 VDC (Typical: 24 VDC)	
Power consumption	500 mA	
	Max. 8 input/outputs in total (adjustable via SmartWeb software)	
	Input	**Output**
Type:	Analog	Analog
• **Range**	• 0-10 V, 0-20 mA, 4-20 mA, PT100, PT1000	• 0-10 V, 0-20 mA, 4-20 mA
• **Resolution**	• 16 Bit	• 16 Bit
• **Sample rate**	• 1000 Hz	
• **Bandwidth**	• 500 Hz	
• **Output rate**		• 1 Hz
Type:	Digital	Digital
• **Range**	• 0/24 VDC	
• **Bandwidth**	• 100 Hz	
• **Type**		• Switching output (Open collector)
• **Switching current**		• Max. 500 mA
Display elements	Booting, Ready for operation, Input failure, Digital input active	
Mounting	35-mm standard mounting rail	
Protection type	IP 20	
Ambient temperature	Operation: -30°C to +60°C Storage: -30°C to +55°C	
Certifications	CE; UKCA; EAC UL/CSA (by using Power supply NEC Class-2)	

PUBLIC

All rights reserved to Schaeffler Automotive Buehl GmbH & Co. KG, in particular in case of grant of an IP right.

ProLink CMS: maximal configuration with vibration and I/O modules

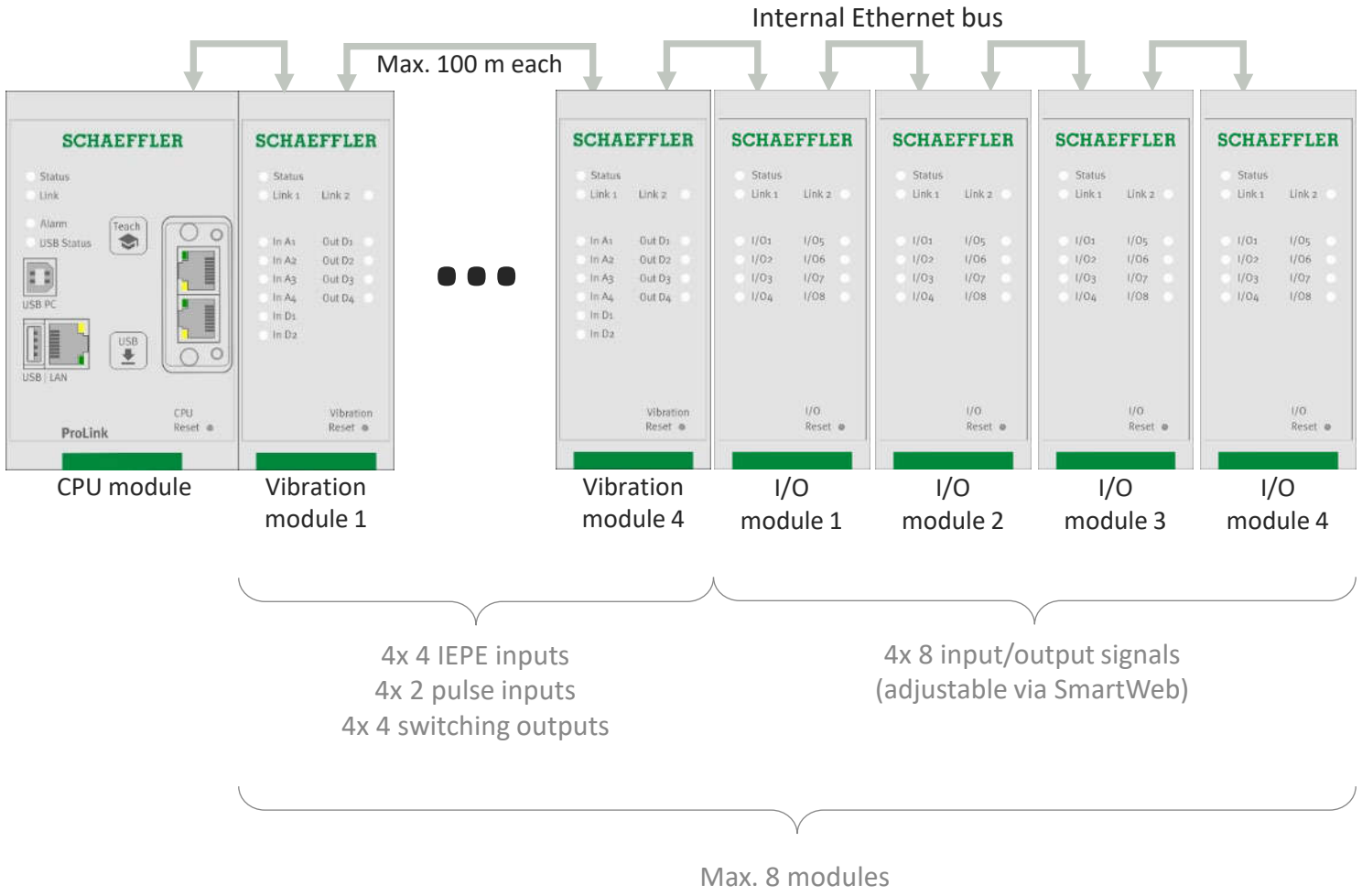

- 1 CPU module + max. 8 modules
- 16 IEPE inputs
- 8 digital inputs (thereof 8 pulse inputs, A/B coded)
- 16 switching outputs (digital)
- 32 input/output signals (adjustable via SmartWeb software)

PUBLIC

All rights reserved to Schaeffler Automotive Buehl GmbH & Co. KG, in particular in case of grant of an IP right.

SCHAEFFLER

Distributed assembly on the example of a paper machine

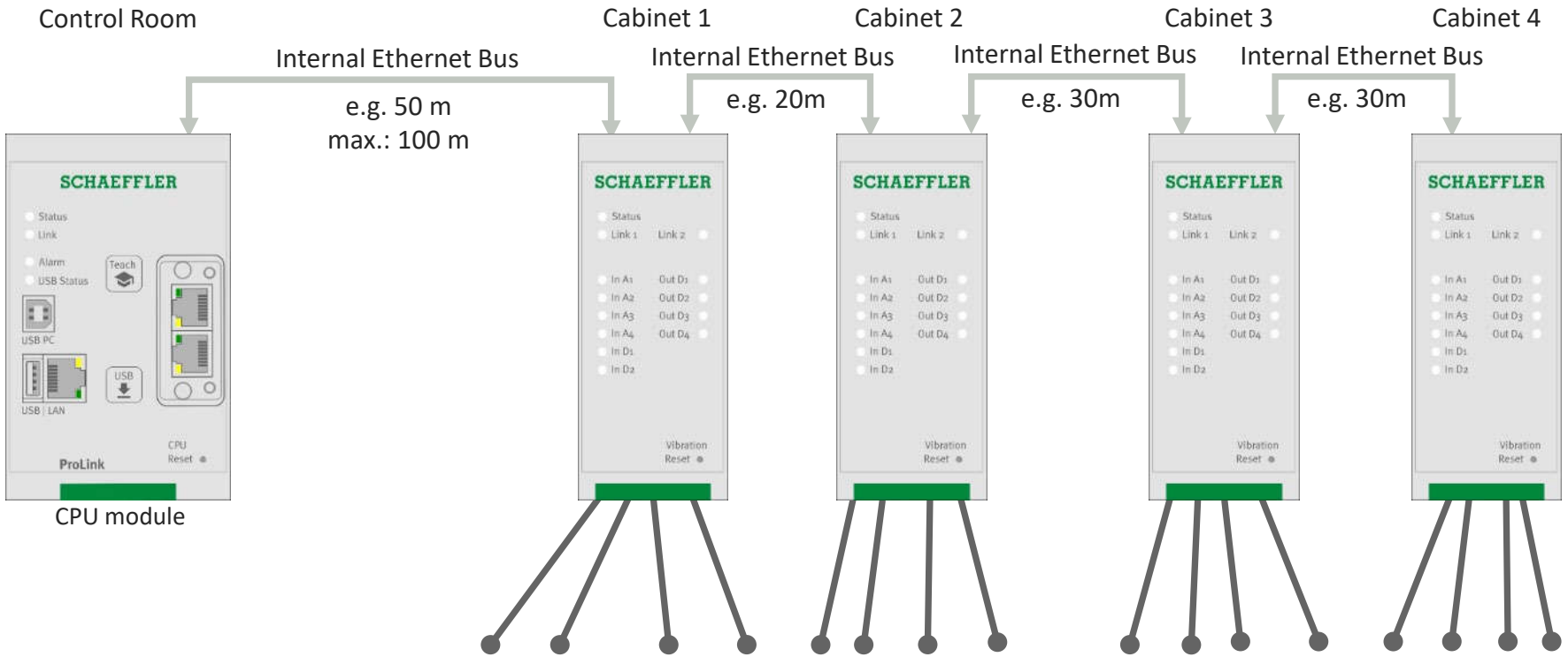

Notice:
An additional power supply unit is required in each control cabinet.

PUBLIC

All rights reserved to Schaeffler Automotive Buehl GmbH & Co. KG, in particular in case of grant of an IP right.

SCHAEFFLER

Dimensions

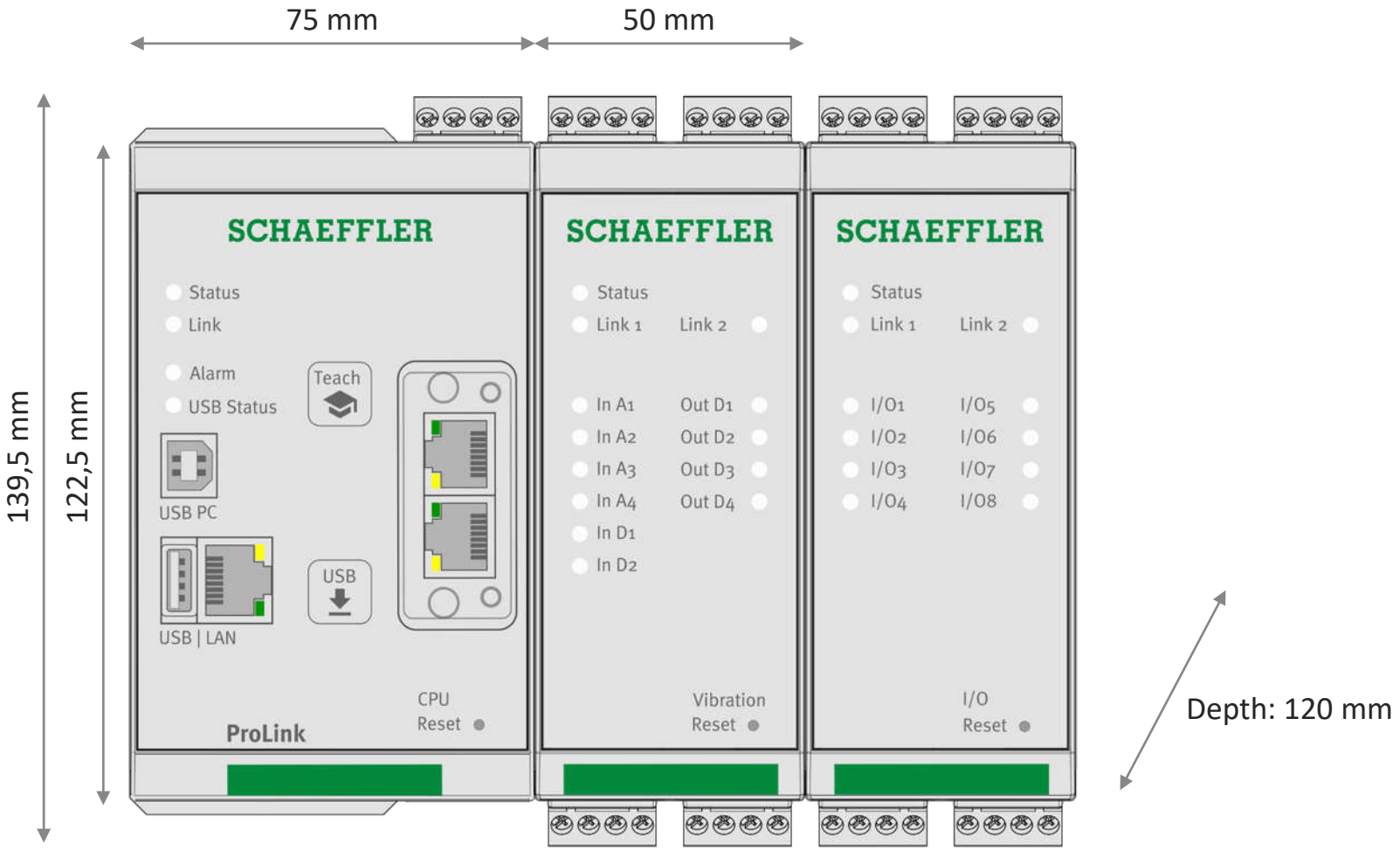

PUBLIC

All rights reserved to Schaeffler Automotive Buehl GmbH & Co. KG, in particular in case of grant of an IP right.

Connections CPU

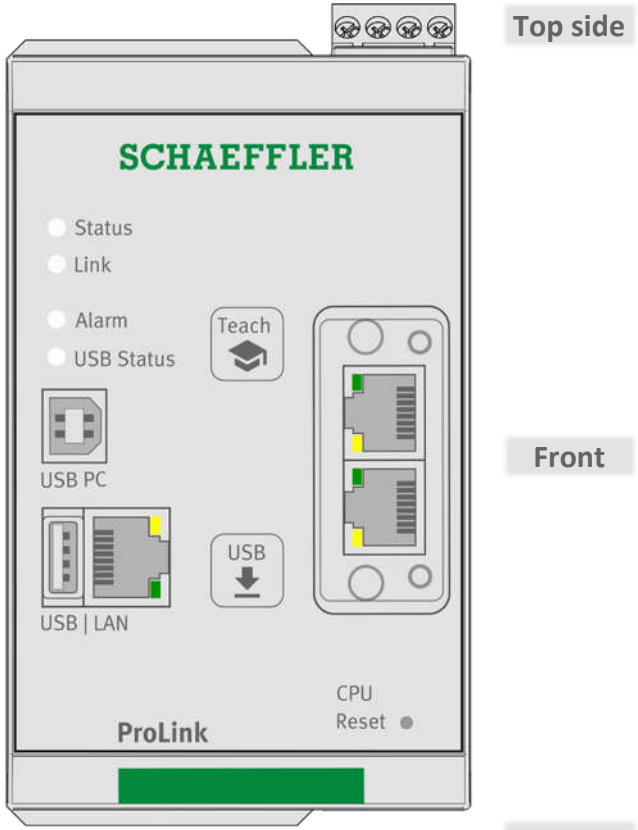

Top side

Front

Bottom

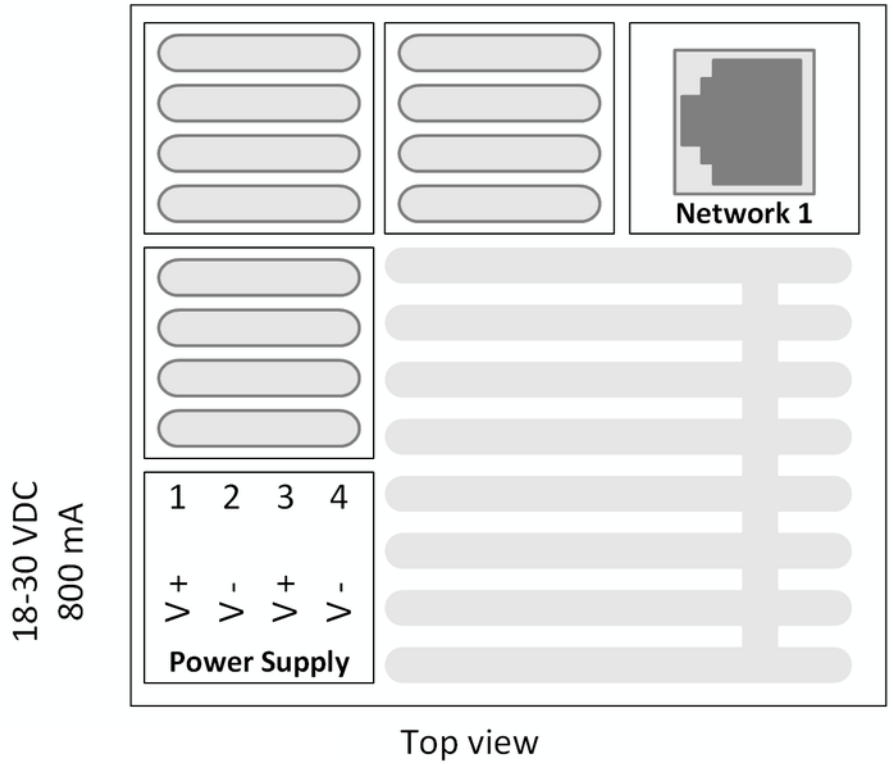

PUBLIC

All rights reserved to Schaeffler Automotive Buehl GmbH & Co. KG, in particular in case of grant of an IP right.

SCHAEFFLER

Connections vibration module

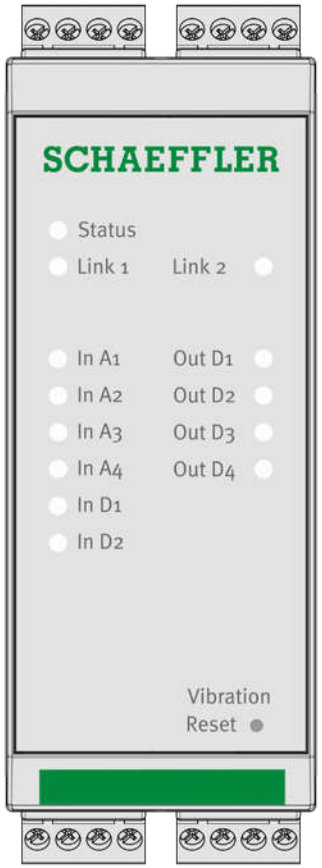

Top side

Front

Bottom

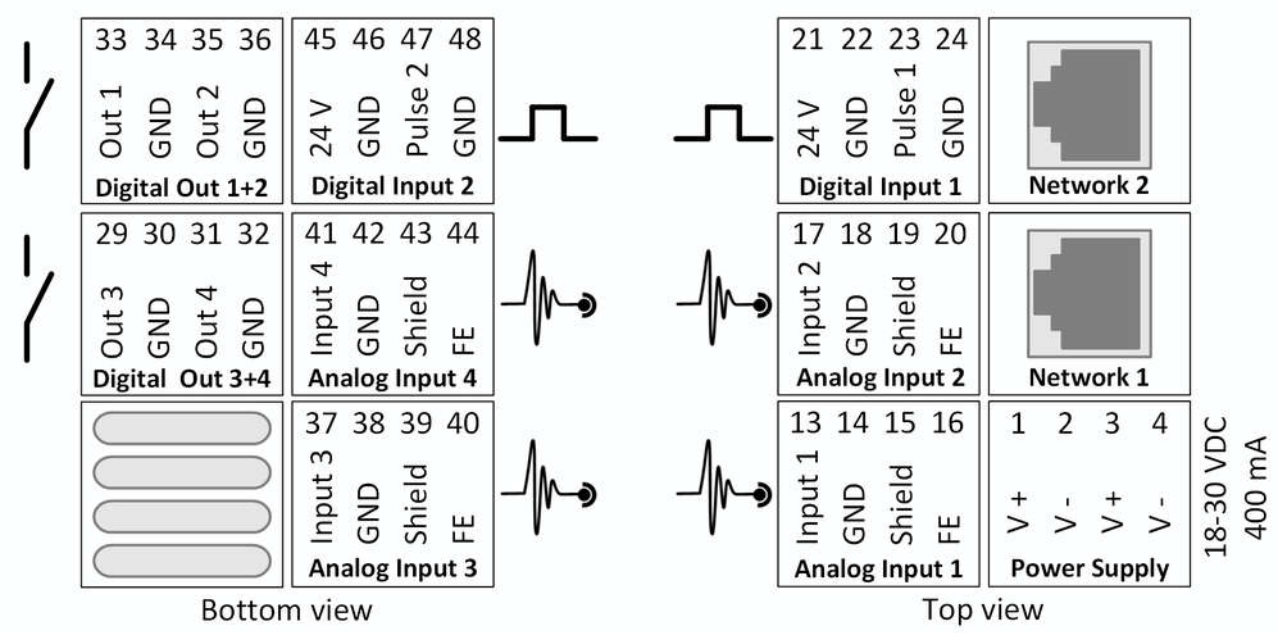

PUBLIC

All rights reserved to Schaeffler Automotive Buehl GmbH & Co. KG, in particular in case of grant of an IP right.

SCHAEFFLER

Connections I/O module

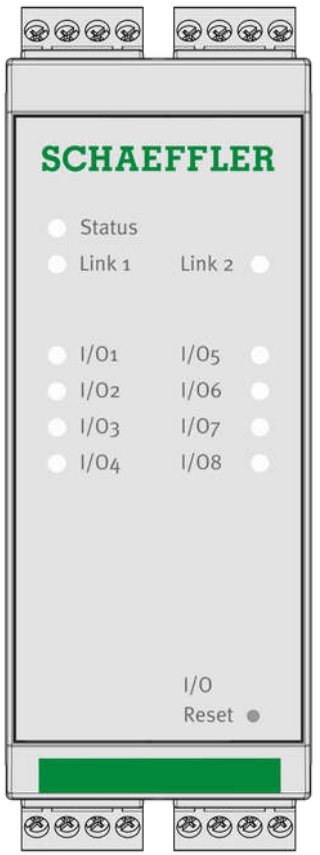

Top side

Front

Bottom

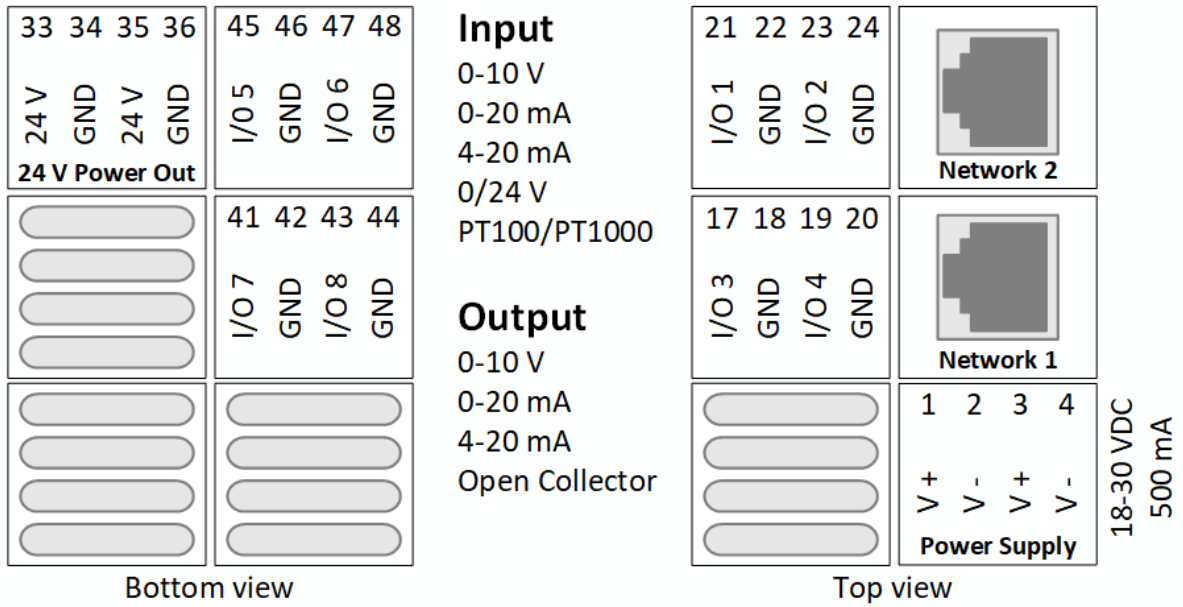

PUBLIC

All rights reserved to Schaeffler Automotive Buehl GmbH & Co. KG, in particular in case of grant of an IP right.

Vibration module: Galvanic insulation



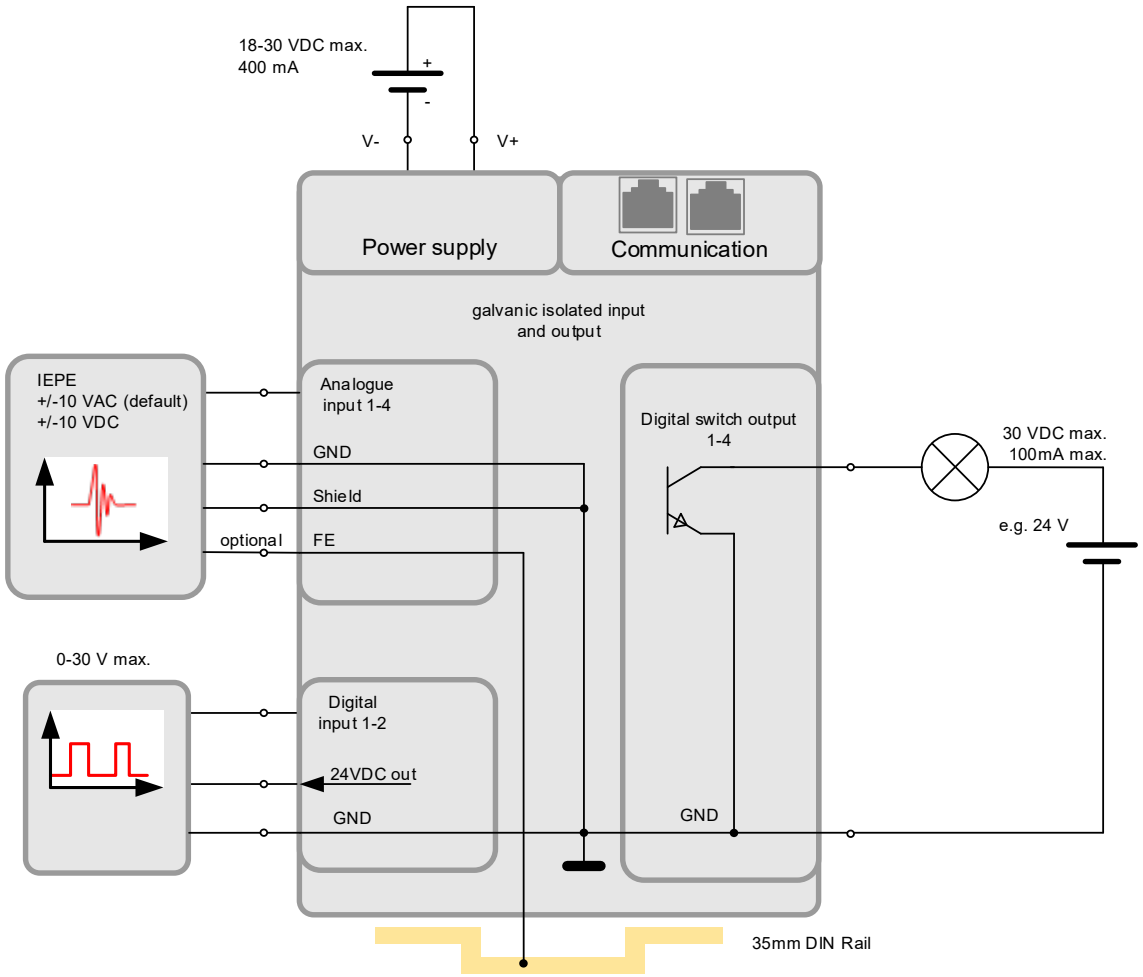

- Power supply 24 VDC galvanic insulated
- Communication (Ethernet) galvanic insulated
- Analog/Digital input with common ground
- Switching output with common ground

PUBLIC

All rights reserved to Schaeffler Automotive Buehl GmbH & Co. KG, in particular in case of grant of an IP right.

I/O module: Galvanic insulation



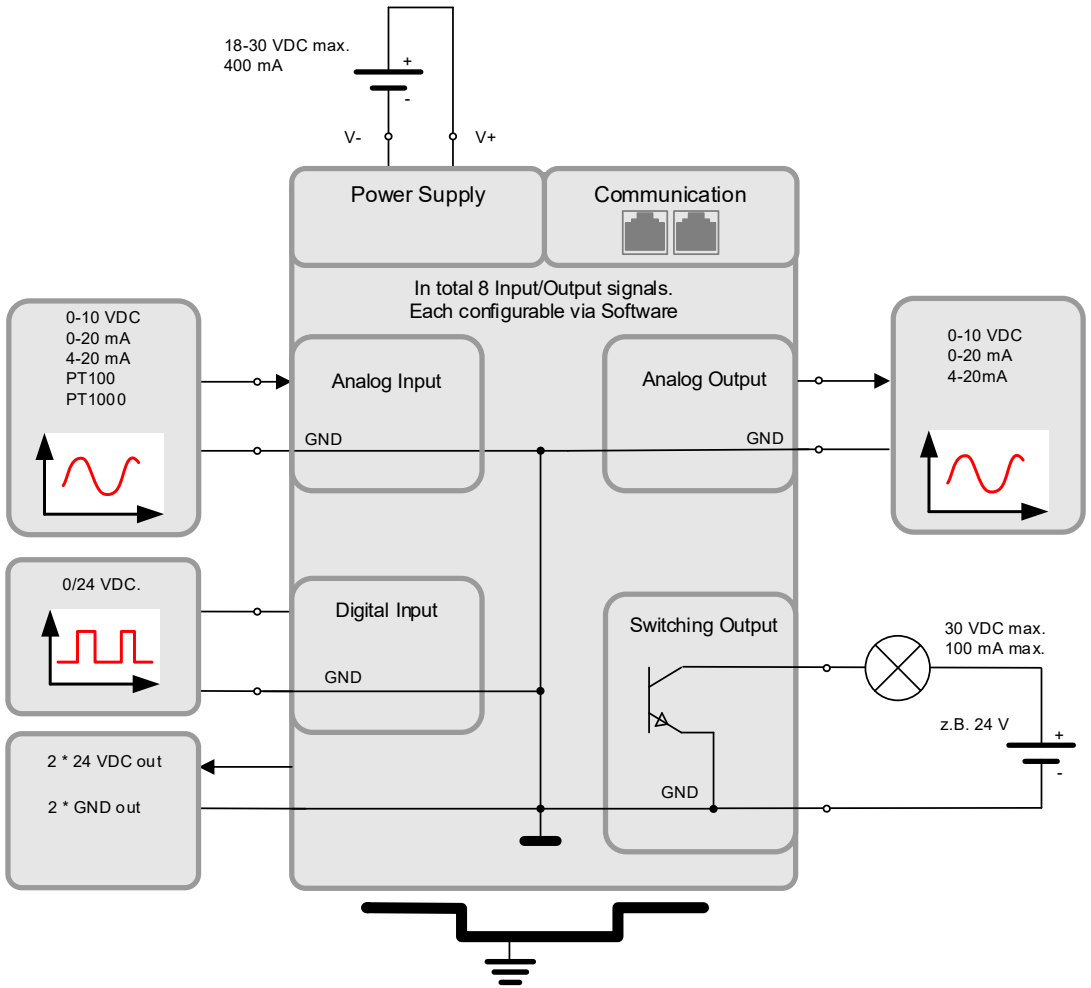

- Power supply 24 VDC galvanic insulated
- Communication (Ethernet) galvanic insulated
- I/O galvanic insulated to power and communication

PUBLIC

All rights reserved to Schaeffler Automotive Buehl GmbH & Co. KG, in particular in case of grant of an IP right.

Agenda

1 Technical details

2 **Accessories & Order numbers**

3 Trainings

PUBLIC

All rights reserved to Schaeffler Automotive Buehl GmbH & Co. KG, in particular in case of grant of an IP right.

SCHAEFFLER

ProLink modules

Starter Kit: PROLINK-CMS-KIT-4CH	Additional Vibration module PROLINK.VIB-IEPE-4CH	Additional I/O module PROLINK.IO-AD-8CH	Optional: License package PROLINK-LICENSE-PACKAGE
			• OPC/UA Server • E-Mail • Channel monitoring
Material number: 094565090-0000-10	Material number: 094565511-0000-10	Material number: 097347906-0000-01	Material number: 095525971-0000

Each module will be delivered with TCP/IP uplink cable + power bridge

PUBLIC

All rights reserved to Schaeffler Automotive Buehl GmbH & Co. KG, in particular in case of grant of an IP right.

SCHAEFFLER

Switching cabinet small (PROLINK-CABINET-8CH)

ProLink CMS switching cabinet - small:
PROLINK-CABINET-8CH



Materialnummer:
095566430-0000-10



ProLink CMS switching cabinet with space for 1 Starter Kit and 1 additional module

- Including power supply 110/230 VAC to 24 VDC, 60 W
- Dimensions: 380 mm x 380 mm x 210 mm (height x width x depth)

- Including Power supply
- Pre-wired
- Steel Housing
- IP66
- RAL 7035

PUBLIC

All rights reserved to Schaeffler Automotive Buehl GmbH & Co. KG, in particular in case of grant of an IP right.

SCHAEFFLER

Switching cabinet small (PROLINK-CABINET-8CH)

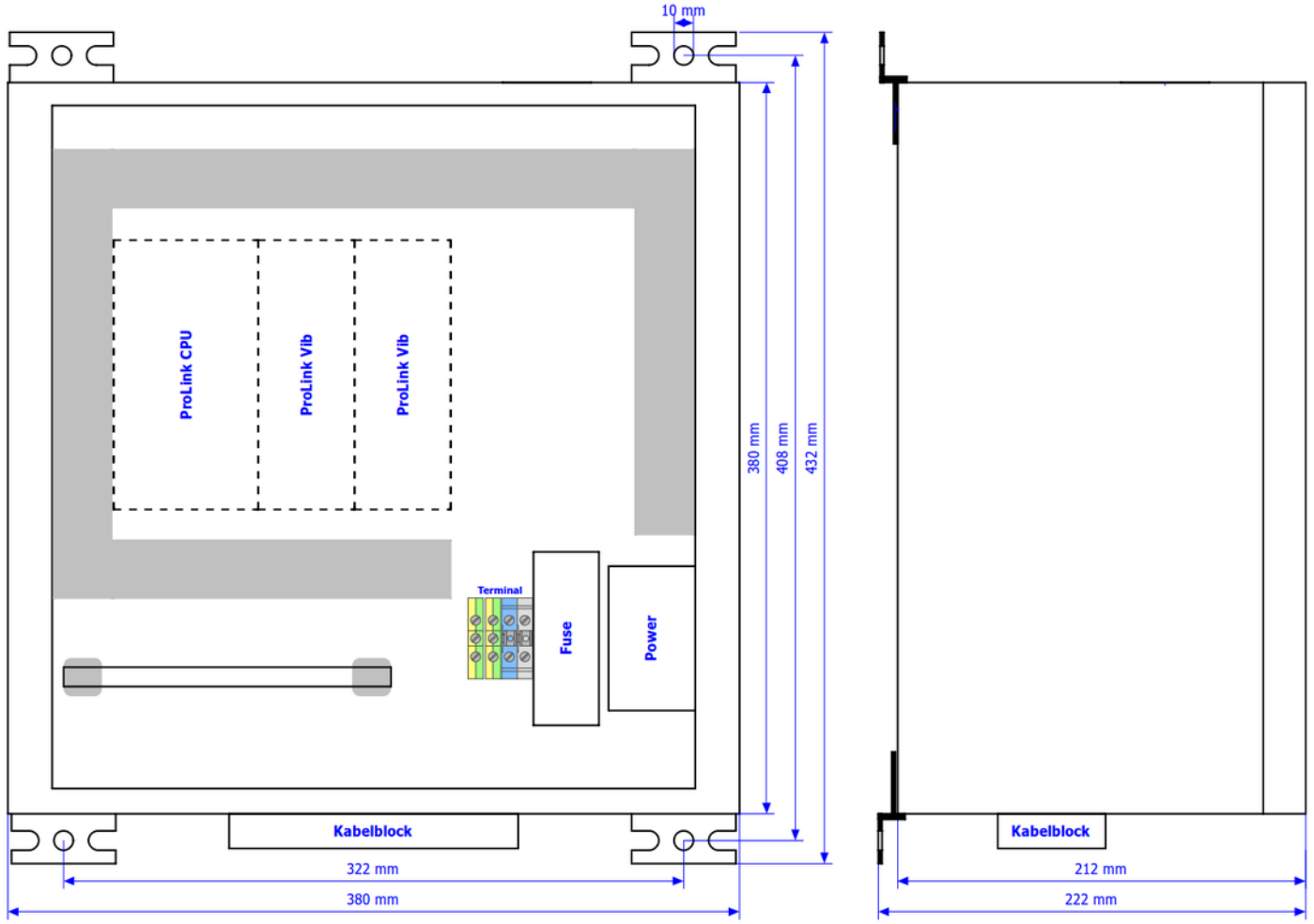

PUBLIC

All rights reserved to Schaeffler Automotive Buehl GmbH & Co. KG, in particular in case of grant of an IP right.

SCHAEFFLER

Switching cabinet big (PROLINK-CABINET-16CH)

ProLink CMS switching cabinet large:
PROLINK-CABINET-16CH



Materialnummer:
095566449-0000-10

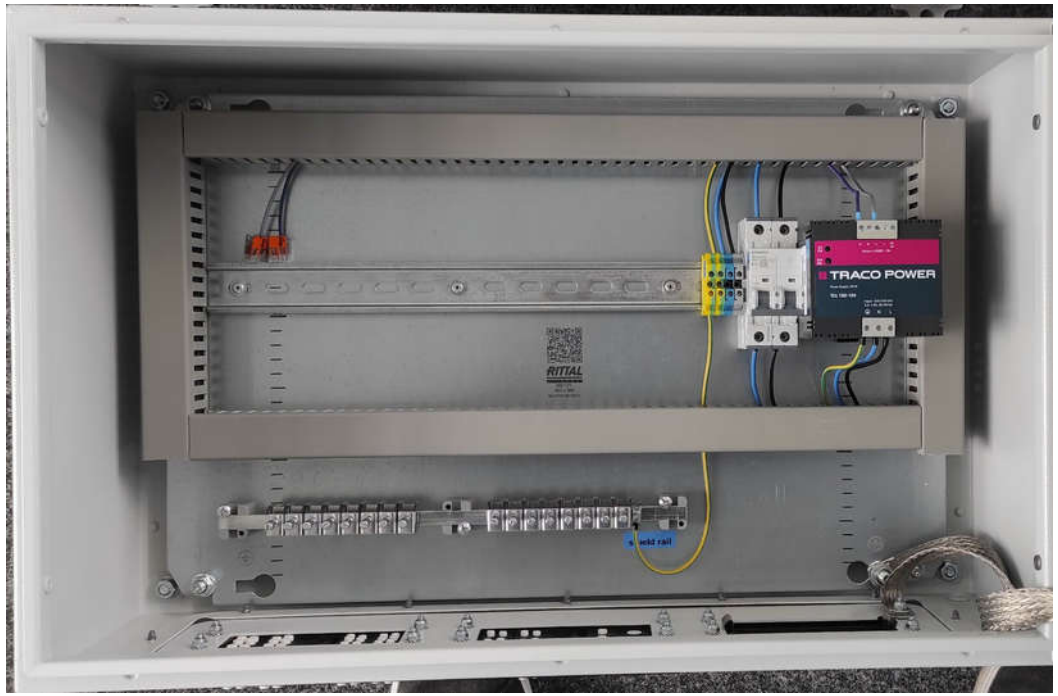

- Including power supply
- Pre-wired
- Steel housing
- IP 66
- RAL 7035

ProLink CMS switching cabinet with space for 1 Starter Kit and 3 additional modules

- Including power supply 110/230 VAC to 24 VDC, 120 W
- Dimensions: 380 mm x 600 mm x 210 mm (height x width x depth)

PUBLIC

All rights reserved to Schaeffler Automotive Buehl GmbH & Co. KG, in particular in case of grant of an IP right.

SCHAEFFLER

Switching cabinet big (PROLINK-CABINET-16CH)

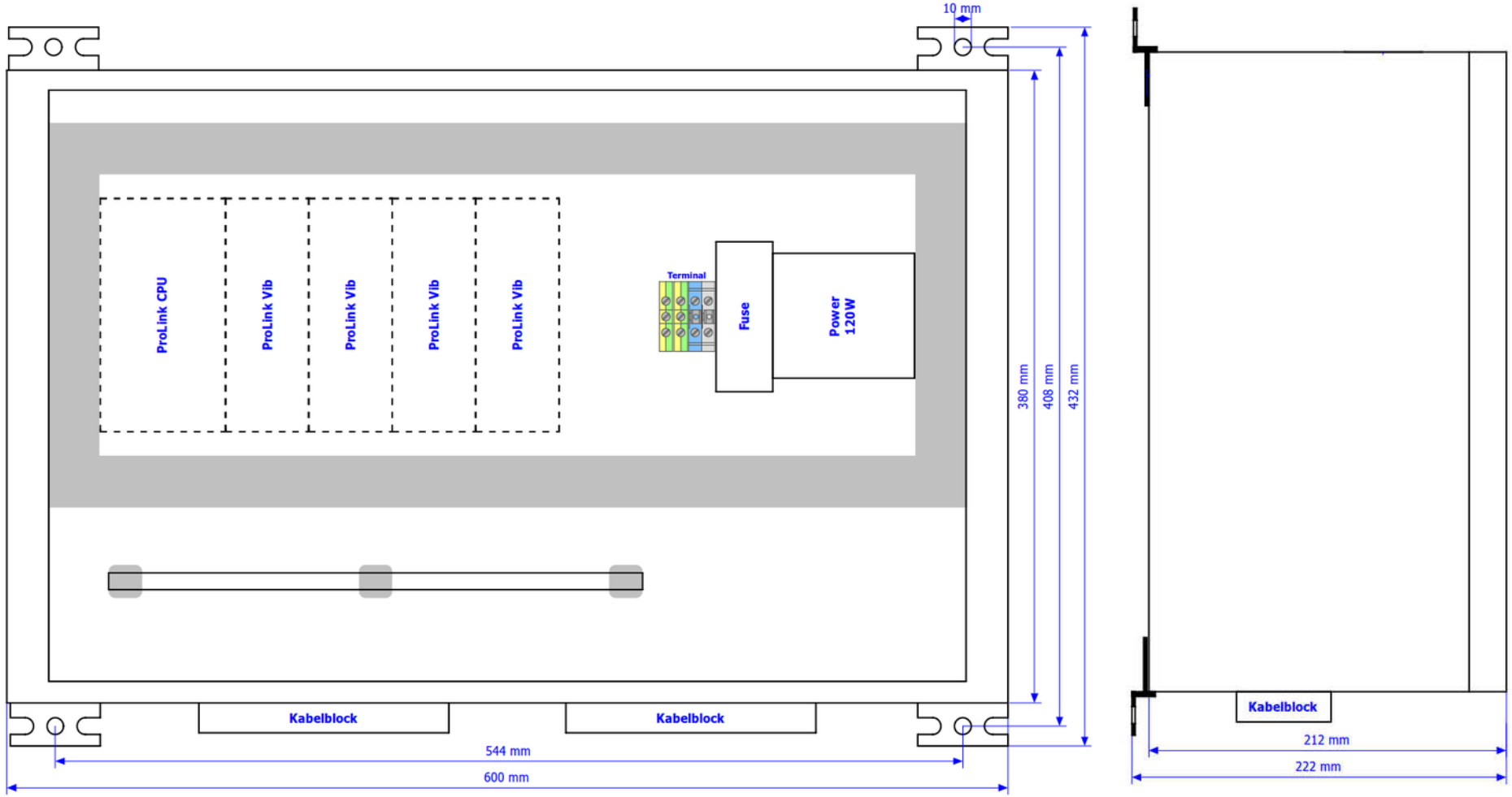

PUBLIC

All rights reserved to Schaeffler Automotive Buehl GmbH & Co. KG, in particular in case of grant of an IP right.

SCHAEFFLER

Standard DIN rail power supply

EP1 number	EP1 designation	Description
086657461-0000-10	DTECTX1.POWER-SUPPLY-24V-60W	Maximum 2,5 A, suitable for 1 CPU + 4 add. modules
096119977-0000-10	DTECTX1.POWER-SUPPLY-24V-120W	Maximum 5 A, suitable for 2 CPU + 8 add. modules



- Universal input 85 - 264 VAC, 50/60 Hz
- Output voltage 24 VDC
- Output current: max. 2,5 A / 5 A
- Detachable screw terminal blocks
- Temperature range:-10 °C to +70 °C
- Protection class: IP 20
- Mounting on 35 mm standard DIN rail

Planned specifications. Subject to change.

PUBLIC

All rights reserved to Schaeffler Automotive Buehl GmbH & Co. KG, in particular in case of grant of an IP right.

SCHAEFFLER

Standard “C02” acceleration sensors with integrated cable

EP1 number	EP1 designation	Description
056073992-0000-10	SENSOR-C002-01S1-5M-OEM8	Standard ICP side exit accelerometer FAG, integrated PU-cable, 5 m
056074140-0000-10	SENSOR-C002-01S1-7M-OEM8	Standard ICP side exit accelerometer FAG, integrated PU-cable, 7 m
056074190-0000-10	SENSOR-C002-01S1-12M-OEM8	Standard ICP side exit accelerometer FAG, integrated PU-cable, 12 m
056074352-0000-10	SENSOR-C002-01S1-20M-OEM8	Standard ICP side exit accelerometer FAG, integrated PU-cable, 20 m
056074530-0000-10	SENSOR-C002-01S1-30M-OEM8	Standard ICP side exit accelerometer FAG, integrated PU-cable, 30 m
064831442-0000-10	SENSOR-C002-01S1-50M-OEM8	Standard ICP side exit accelerometer FAG, integrated PU-cable, 50 m



Frequency range:	0,5 Hz – 10 kHz
Sensitivity:	100 mV/G
Temperature:	121 °C
Mounting bold:	M8

Other acceleration sensors on request for:

- High temperature
- Low frequency
- High frequency
- Other dimensions

PUBLIC

All rights reserved to Schaeffler Automotive Buehl GmbH & Co. KG, in particular in case of grant of an IP right.

SCHAEFFLER

Standard “C02” Acceleration Sensors with MIL Connector and extension cable

EP1 number	EP1 designation	Description
056059760-0000-10	SENSOR-C002-01S0-00MILM8	Standard ICP side exit accelerometer FAG, MIL-connector
085079553-0000-10	SENSOR.CABLE-MIL-OE-3M	sensor cable, MIL-connector, open cable ends, 85 °C, 3 m
039697550-0000-10	SENSOR.CABLE-MIL-OE-5M	sensor cable, MIL-connector, open cable ends, 85 °C, 5m
039697517-0000-10	SENSOR.CABLE-MIL-OE-10M	sensor cable, MIL-connector, open cable ends, 85 °C, 10 m
039697525-0000-10	SENSOR.CABLE-MIL-OE-15M	sensor cable, MIL-connector, open cable ends, 85 °C, 15 m
039697533-0000-10	SENSOR.CABLE-MIL-OE-20M	sensor cable, MIL-connector, open cable ends, 85 °C, 20 m
039697541-0000-10	SENSOR.CABLE-MIL-OE-30M	sensor cable, MIL-connector, open cable ends, 85 °C, 30 m
085079715-0000-10	SENSOR.CABLE-MIL-OE-40M	sensor cable, MIL-connector, open cable ends, 85 °C, 40 m
085079731-0000-10	SENSOR.CABLE-MIL-OE-50M	sensor cable, MIL-connector, open cable ends, 85 °C, 50 m





PUBLIC

All rights reserved to Schaeffler Automotive Buehl GmbH & Co. KG, in particular in case of grant of an IP right.

SCHAEFFLER

Mounting adapters

EP1 number	EP1 designation	Description
039697592-0000-10	SENSOR.FIX-PLATE-M8	mounting shims, diameter: 25 mm, height: 13 mm, stainless steel, M8-thread
020961278-0000-10	SENSOR.PLATE-GLUE	Adhesive to glue mounting shims



PUBLIC

All rights reserved to Schaeffler Automotive Buehl GmbH & Co. KG, in particular in case of grant of an IP right.

SCHAEFFLER

Speed Measurement

EP1 number	EP1 designation	Description
056784953-0000-10	DTECTX1.SENSOR-SPEED-INDU	Inductive speed sensor
056790082-0000-10	DTECTX1.SENSOR-SPEED-OPT	Optical speed sensor
056790139-0000-10	DTECTX1.SENSOR-SPEED-REFL	Reflector foil for optical speed sensor, 9 m
058299009-0000-10	DTECTX1.SENSOR-SPEED-CABLE-10M	Cable for speed sensor, 10 m, open cable ends

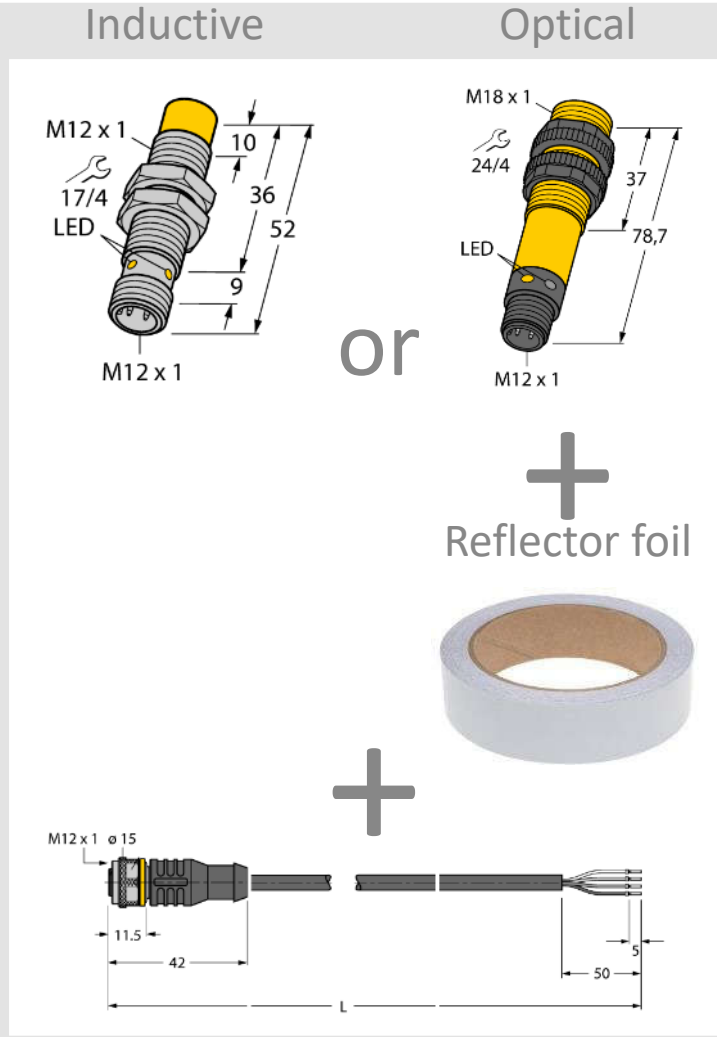

PUBLIC

All rights reserved to Schaeffler Automotive Buehl GmbH & Co. KG, in particular in case of grant of an IP right.

SCHAEFFLER

Agenda

1 Technical details

2 Accessories & Order numbers

3 **Trainings**

PUBLIC

All rights reserved to Schaeffler Automotive Buehl GmbH & Co. KG, in particular in case of grant of an IP right.

SCHAEFFLER

Training 1: Introductory product training

- **Schaeffler SmartCheck and ProLink CMS with SmartUtility software**
  - Installation and commissioning of the SmartCheck and ProLink CMS
  - Overview of the core functions of the SmartCheck and ProLink CMS
  - Working with the standard configuration
  - First inspection of the measured data
  - Learning phase, alarm thresholds and alarms
  - Download of measured data
  - Exercises

Duration: 1 day

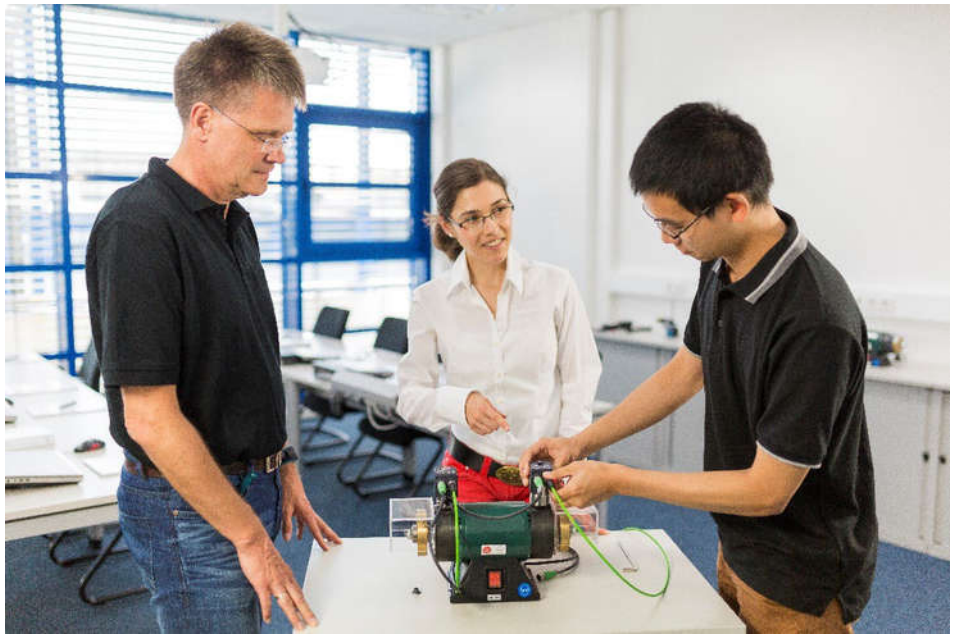

Planned specifications, subject to change!

PUBLIC

All rights reserved to Schaeffler Automotive Buehl GmbH & Co. KG, in particular in case of grant of an IP right.

SCHAEFFLER

Training 2: Advanced product Training

- **Schaeffler SmartCheck and ProLink CMS with SmartUtility software**
  - Basic vibration theory
  - Basic signal processing
  - Machine vibrations caused by faults and defects
  - Condition monitoring
  - Vibration measurement with SmartCheck and ProLink CMS on machines with constant and variable speed
  - Analysis and assessment of vibration measurements
  - Exercises

Duration: 3 days



Planned specifications, subject to change!

PUBLIC

All rights reserved to Schaeffler Automotive Buehl GmbH & Co. KG, in particular in case of grant of an IP right.