RA3110

Incremental encoder with hollow shaft

INCREMENTAL ENCODER

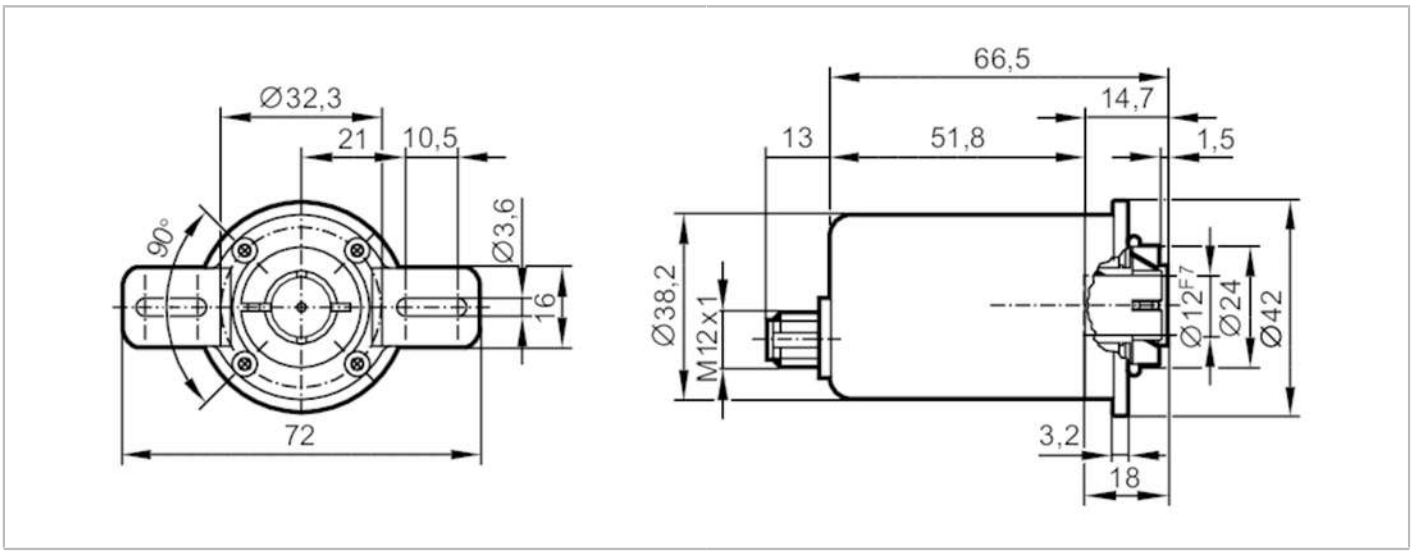

Product characteristics		
Resolution		1...10000; (parameterisable; Factory setting: 1024) resolution
Communication interface		IO-Link
Shaft design		hollow shaft open to one side
Shaft diameter	[mm]	12
Application		
Function principle		incremental
Revolution type		incremental /singleturn
Detection system		magnetic
Electrical data		
Operating voltage	[V]	4.75...30 DC
Current consumption	[mA]	< 150
Protection class		III
Reverse polarity protection		yes
Max. power-on delay time	[ms]	500
Max. revolution electrical	[U/min]	6000
Outputs		
Electrical design		HTL/TTL
Switching frequency	[kHz]	1000
Factory setting		Output function: HTL (50 mA)
Short-circuit protection		yes
Phase difference A and B	[°]	90
Measuring/setting range		
Resolution		1...10000; (parameterisable; Factory setting: 1024) resolution
Accuracy / deviations		
Accuracy	[°]	0.1

RA3110

Incremental encoder with hollow shaft

INCREMENTAL ENCODER

Software / programming			
Parameter setting options		Resolution; direction of rotation; HTL; TTL	
Interfaces			
Communication interface		IO-Link	
Transmission type		COM2 (38,4 kBaud)	
IO-Link revision		1.1	
SIO mode		yes	
Min. process cycle time	[ms]	2.3	
Operating conditions			
Ambient temperature	[°C]	-40...85	
Storage temperature	[°C]	-40...85	
Max. relative air humidity	[%]	95; (condensation not permissible)	
Protection		IP 68; IP 69K	
Tests / approvals			
Vibration resistance		DIN EN 60068-2-6	20 g
Shock resistance		DIN EN 60068-2-27	200 g 11 ms
Continuous shock resistance		DIN EN 60068-2-29	20 g / 10...1000 Hz
Vibration resistance			30 g / 10...1000 Hz
MTTF	[years]	292	
Mechanical data			
Weight	[g]	372.9	
Dimensions	[mm]	Ø 42 / L = 79.5	
Materials		flange: stainless steel (316L/1.4404); housing: stainless steel (316L/1.4404)	
Tightening torque	[Nm]	< 0.7; (Mounting screw)	
Max. revolution, mechanical	[U/min]	6000	
Max. starting torque	[Nm]	5	
Reference temperature torque	[°C]	20	
Shaft design		hollow shaft open to one side	
Shaft diameter	[mm]	12	
Shaft material		stainless steel (440B/1.4112)	
Installation depth of shaft	[mm]	22	
Max. axial shaft misalignment	[mm]	0,5	
Fixing flange		Ø 42 mm	

Electrical connection

Connector: 1 x M12, axial; coding: A; Moulded body: stainless steel (316 / 1.4401)

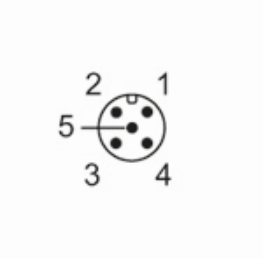

RA3110

Incremental encoder with hollow shaft

INCREMENTAL ENCODER

IO-Link	
1	L+
2	not to be used
3	L-
4	IO-Link
5	not to be used
Screen	plug

encoder	
1	UB
2	A
3	GND
4	Z/0-Pulse (90 deg)
5	B
Screen	plug

Diagrams and graphs

Pulse diagram

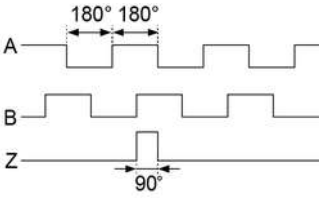

direction of rotation clockwise (looking at the shaft)