Lock nut spanner TMHN 7

Application

The TMHN 7 is designed for mounting self-aligning ball bearings on adapter sleeves. The set of seven different-sized spanners made of spheroidal graphite cast iron is supplied complete with handle for fast and accurate mounting. Each spanner is clearly marked with the correct tightening angle to help ensure that the correct drive-up is used, and that the recommended radial clearance remains after locking the sleeve nut. The spanners engage the nut at four positions for a safe grip. The nut will be accurately centered, counteracting misalignment of the bearing.



Technical data

Designation	TMHN 7
Dimensions	345 x 255 x 85 mm (13.6 x 10.0 x 3.3 in)
Weight	2,2 kg (4.7 lb)

Selection chart

Spanner	Bearing type			
HNM 5	1205 EK	2205 EK	1305 EK	
HNM 6	1206 EK	2206 EK	1306 EK	2306 K
HNM 7	1207 EK	2207 EK	1307 EK	2307 EK
HNM 8	1208 EK	2208 EK	1308 EK	2308 EK
HNM 9	1209 EK	2209 EK	1309 EK	2309 EK
HNM 10	1210 EK	2210 EK	1310 EK	2310 K
HNM 11	1211 EK	2211 EK	1311 EK	2311 K

Replacement parts

HNM 5	Spanner size 5
HNM 6	Spanner size 6
HNM 7	Spanner size 7
HNM 8	Spanner size 8
HNM 9	Spanner size 9
HNM 10	Spanner size 10
HNM 11	Spanner size 11
HNMH	Handle

Operating instructions

For correct mounting of self-aligning ball bearings on adapter sleeves:

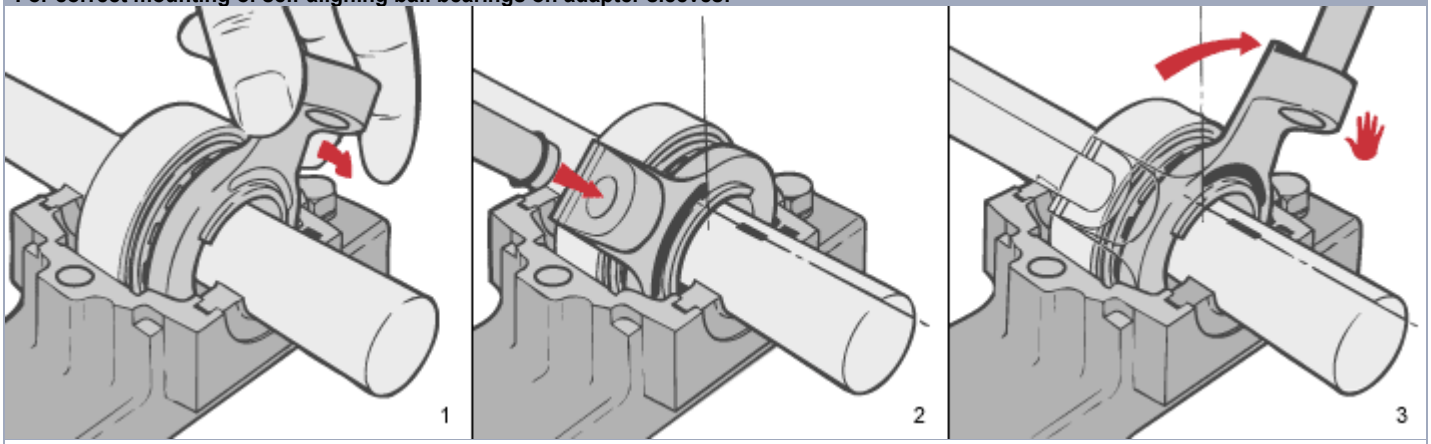

1. Tighten the nut using hand pressure only, to make metal-to-metal contact between the tapered surfaces. Do not use the handle.

2.	Mark the shaft at a point corresponding to the beginning of the orange semicircular marking on the tool.
3.	Tighten the nut using the handle until the shaft marking corresponds to the end of the orange semicircular marking. Lock the nut.
Make sure that the adapter sleeve does not move on the shaft while tightening.	