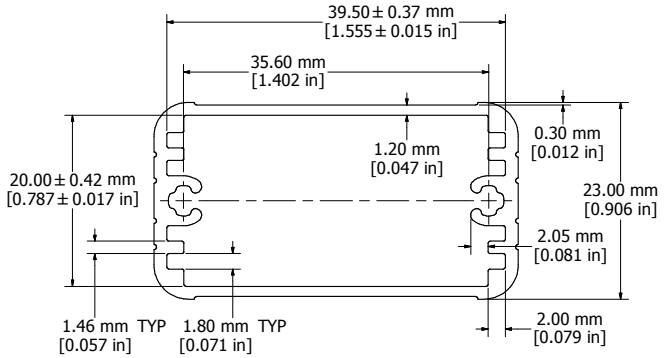

EXTRUSION PROFILE

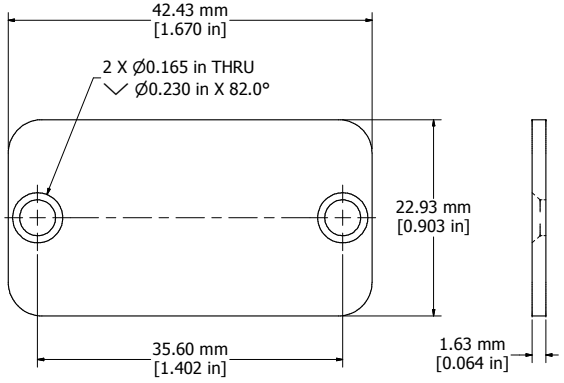

ENDPLATE

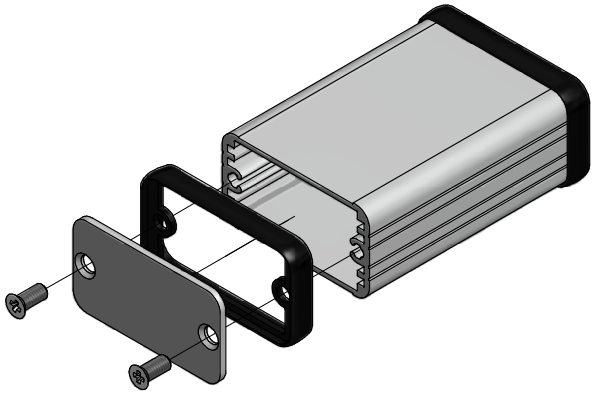

EXPLODED ASSEMBLY VIEW

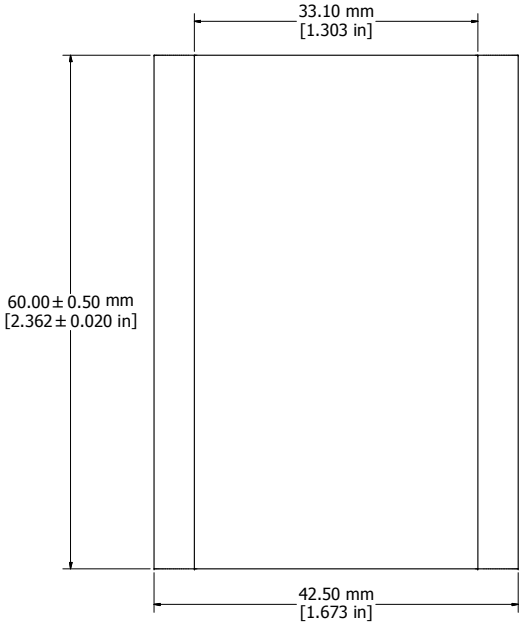

DESIGNED FOR 39MM WIDE PC BOARD

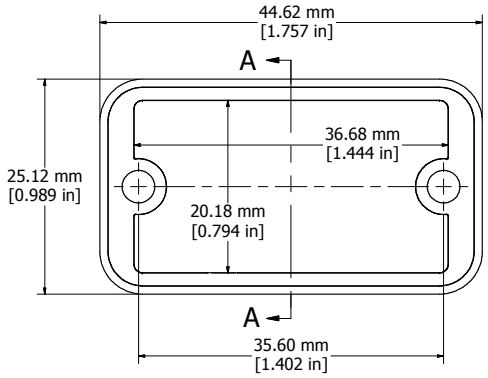

OPEN BEZEL

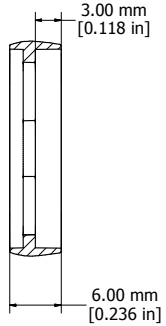

SECTION A-A

Enclosures can be Factory Modified (Milling, Drilling, Printing etc.)
Contact Factory mjm@hammondmfg.com for quotes
Solid models of this enclosure available in STEP or IGES.

NOTE
Purchased assembly includes box, plastic bezels, End Panels, Custom #6 Taptight screws and self adhesive rubber feet
Box made from Extruded Aluminum 6063-T5
Bezels made with polycarbonate.
End Plates made from 5052-H32 Aluminum

1455D601

PART NUMBERS	
Clear Anodized	1455D601
Black Anodized	1455D601BK

ACCESSORIES
See website for accessories.

HAMMOND MANUFACTURING™

1455D601

www.hammondmfg.com