N0030A

Switching amplifiers for Namur sensors

NV1121/115VAC/RL/1D/1G

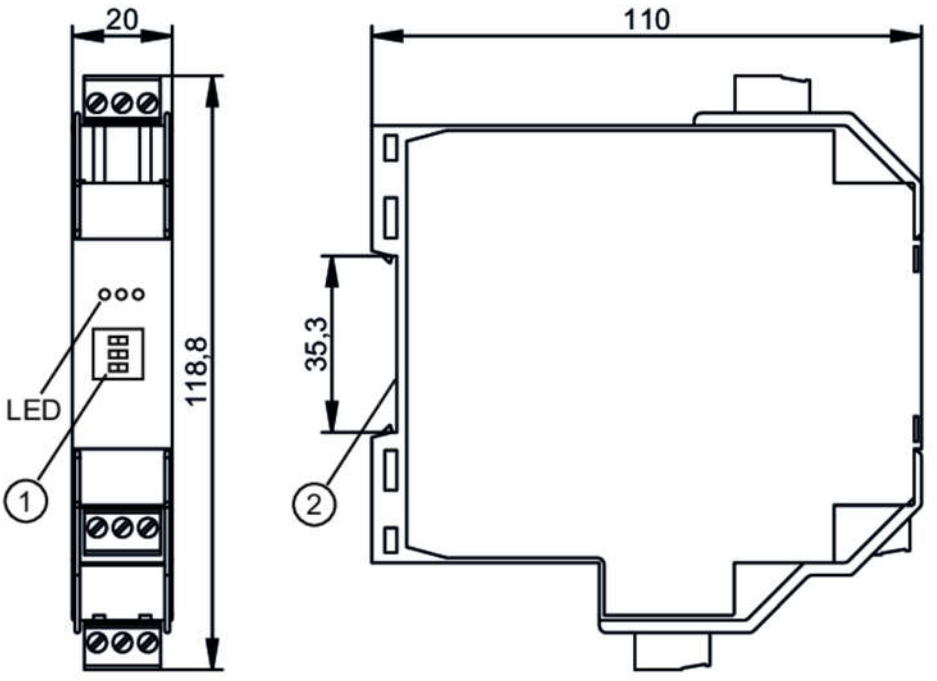

1 selector switch
2 mounting on DIN rail

Application		
Application		short-circuit monitoring; Wire monitoring
Electrical data		
Operating voltage tolerance	[%]	-10...10
Operating voltage	[V]	115 AC
Max. power consumption	[VA]	1
Number of channels		1
Outputs		
Electrical design		relay; (1 changeover contact)
Contact rating		253 V AC / 2 A / cos phi > 0,7 // 40 V DC / 2 A; (ohmic resistance)
Switching frequency AC	[Hz]	10
Operating conditions		
Ambient temperature	[°C]	-20...60
Protection		IP 20
Tests / approvals		
Approval		PTB 02 ATEX 2035; IECEx PTB 17.0023
ATEX marking		II (1) G [Ex ia Ga] IIC
		II (1) D [Ex ia Da] IIIC
EMC		EN 50081-2 (1993)
		EN 61326-1 (2006)
MTTF	[years]	458

N0030A

Switching amplifiers for Namur sensors

NV1121/115VAC/RL/1D/1G

Mechanical data		
Weight [g]	198	
Switching cycles mechanical	10 million	

Displays / operating elements		
Display	switching status	LED, yellow
	operation	LED, green
	function	LED, red

Remarks	
Remarks	Caution The control monitor must be mounted outside the hazardous area.
	Free terminals must not be used.
Pack quantity	1 pcs.

Electrical connection

terminals: ...2.5 mm²

Connection

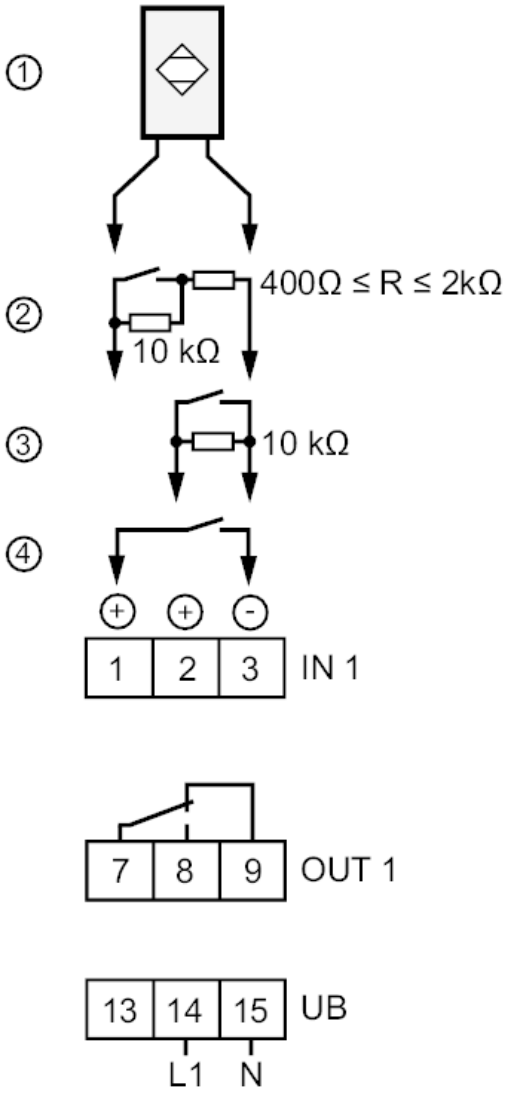

N0030A

Switching amplifiers for Namur sensors

NV1121/115VAC/RL/1D/1G

Other data

Maximum values for control circuit

in protection rating intrinsic safety	[EEx ia] IIC	[EEx ia] IIB	[EEx ib] IIC	[EEx ib] IIB
Voltage [V]	10.6	10.6	10.6	10.6
Current [mA]	19.1	19.1	19.1	19.1
Power [mW]	51	51	51	51
External inductance [mH]	97	390	97	390
External capacitance [µF]	2.32	16.2	2.32	16.2