DATASHEET

FLEXIBLE TOGGLE LATCH 41002 ZI

PICTURES

DESCRIPTION:

Complete folding of the hook along the lever
Very high tensile strength
Lever lock to prevent accidental opening
High resistance to vibration and shock
Possibility of sealing
Large support surface for the hooking lug
Approximate mounting dimension with catch plate: x = 90 mm for a tension of approx. 300 daN
Maximum tension in use: 350 daN
Maximum tension before deformation: 450 daN

Supplied with catch plate

FEATURES:

- Finish: Zinc Plated
- Material: Steel
- Dimensions: 70 x 19 mm
- Width: 70 mm
- Depth: 19mm

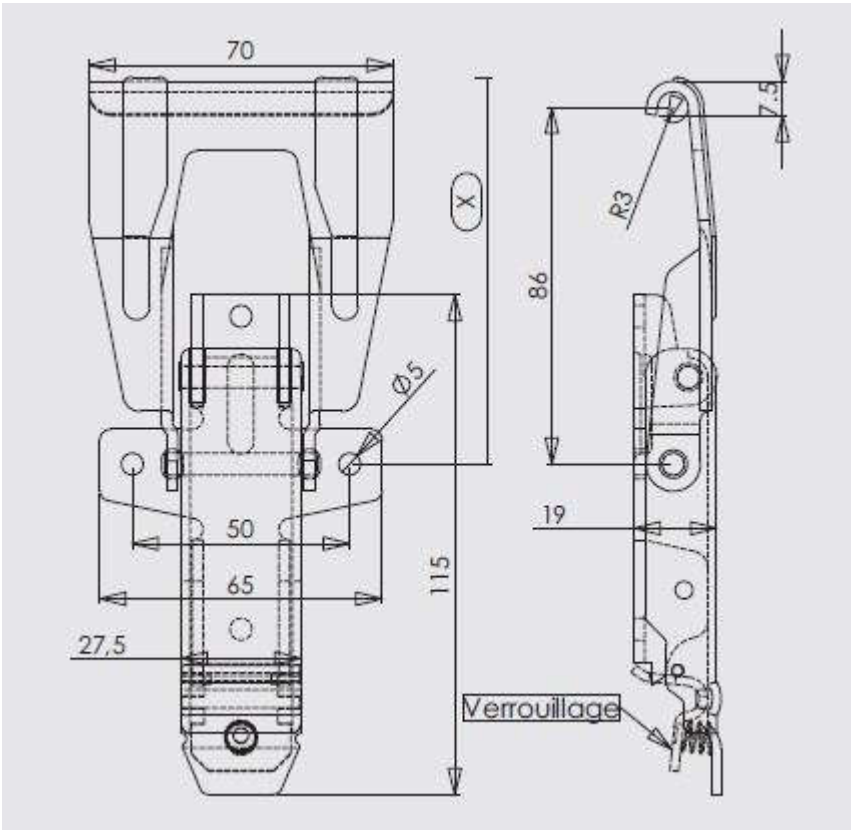
70
7,5
X
R3
86
Ø5
50
19
65
115
27,5
Verrouillage

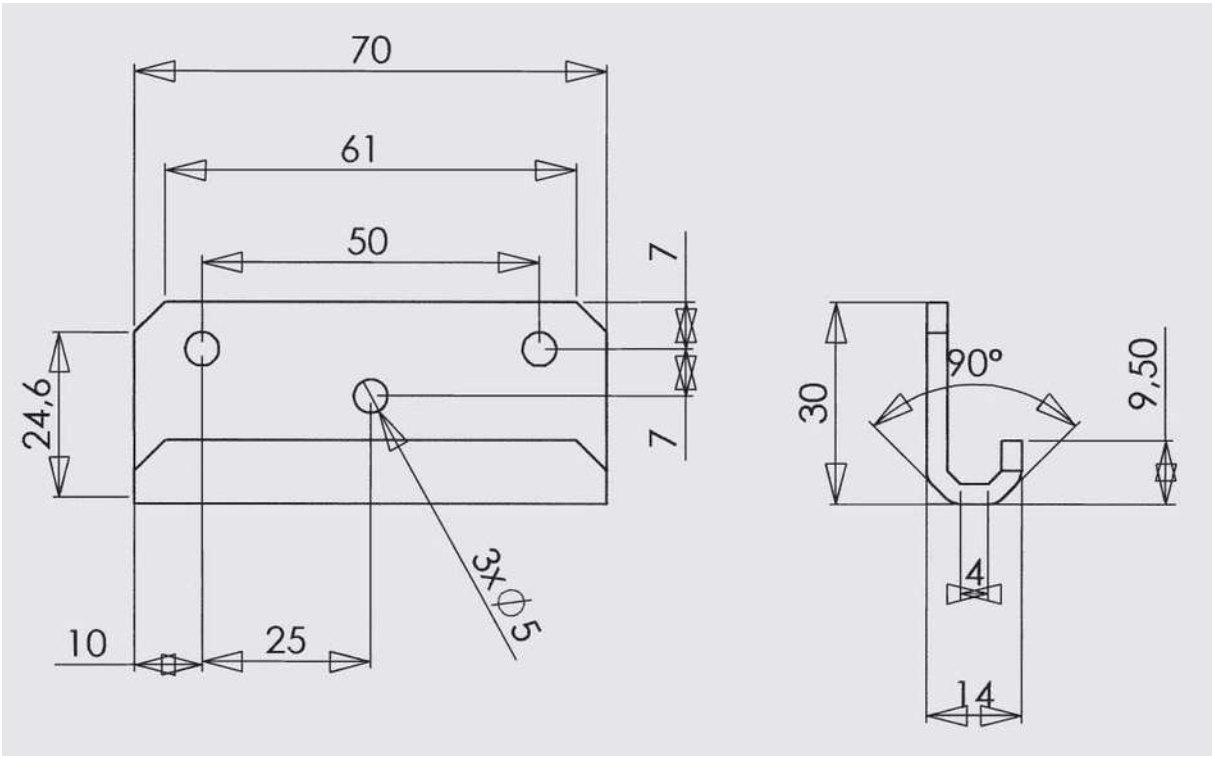
70
61
50
7
24,6
7
3xØ5
10
25
30
90°
9,50
4
14