SCHMERSAL

EN Operating instructions..... pages 1 to 6
Translation of the original operating instructions

FR Vous trouverez la version actuelle du mode d'emploi dans votre langue nationale officielle sur l'Internet, www.schmersal.net.

ES Encontrará el manual de instrucciones actual en su idioma oficial de la UE en nuestra página de Internet www.schmersal.net.

NL U vindt de huidige versie van de gebruikshandleiding in uw officiële landstaal op het Internet, www.schmersal.net.

IT Il manuale d'istruzioni aggiornato nella vostra lingua (lingua ufficiale UE) è scaricabile in Internet all'indirizzo www.schmersal.net.

JP EU公用語で書かれた最新の取扱説明書は、インターネッ(www.schmersal.net)からダウンロードできます。

Content

1 About this document
1.1 Function 1
1.2 Target group: authorised qualified personnel 1
1.3 Explanation of the symbols used 1
1.4 Appropriate use 1
1.5 General safety instructions 1
1.6 Warning about misuse 2
1.7 Exclusion of liability 2

2 Product description
2.1 Ordering code 2
2.2 Special versions 2
2.3 Destination and use 2
2.4 Technical data 2
2.5 Safety classification 3

3 Mounting
3.1 General mounting instructions 3
3.2 Dimensions 3
3.3 Axial misalignment 3
3.4 Adjustment 4

4 Electrical connection
4.1 General information for electrical connection 4
4.2 Contact variants 4
4.3 Connector plug 4

5 Set-up and maintenance
5.1 Functional testing 5
5.2 Maintenance 5

6 Disassembly and disposal
6.1 Disassembly 5
6.2 Disposal 5

7 Appendix
7.1 EC Declaration of conformity 6

1 About this document

1.1 Function

This operating instructions manual provides all the information you need for the mounting, set-up and commissioning to ensure the safe operation and disassembly of the safety switchgear. The operating instructions must be available in a legible condition and a complete version in the vicinity of the device.

1.2 Target group: authorised qualified personnel

All operations described in this operating instructions manual must be carried out by trained specialist personnel, authorised by the plant operator only.

Please make sure that you have read and understood these operating instructions and that you know all applicable legislations regarding occupational safety and accident prevention prior to installation and putting the component into operation.

The machine builder must carefully select the harmonised standards to be complied with as well as other technical specifications for the selection, mounting and integration of the components.

1.3 Explanation of the symbols used

Information, hint, note:
This symbol is used for identifying useful additional information.

Caution: Failure to comply with this warning notice could lead to failures or malfunctions.
Warning: Failure to comply with this warning notice could lead to physical injury and/or damage to the machine.

1.4 Appropriate use

The products described in these operating instructions are developed to execute safety-related functions as part of an entire plant or machine. It is the responsibility of the manufacturer of a machine or plant to ensure the proper functionality of the entire machinery or plant.

The safety switchgear must be exclusively used in accordance with the versions listed below or for the applications authorised by the manufacturer. Detailed information regarding the range of applications can be found in the chapter "Product description".

1.5 General safety instructions

The user must observe the safety instructions in this operating instructions manual, the country-specific installation standards as well as all prevailing safety regulations and accident prevention rules.

Further technical information can be found in the Schmersal catalogues or in the online catalogue on the Internet: www.schmersal.net.

The information contained in this operating instructions manual is provided without liability and is subject to technical modifications.

If multiple safety components are wired in series, the Performance Level to EN ISO 13849-1 will be reduced due to the restricted error detection under certain circumstances. The entire concept of the control system, in which the safety component is integrated, must be validated to EN ISO 13849-2.

There are no residual risks, provided that the safety instructions as well as the instructions regarding mounting, commissioning, operation and maintenance are observed.

x.000 / v.A. / 04.2010 / BZ-Nr. 56000-12V900_EN / Teile-Nr. 1184663 / Ausgabe H

1.6 Warning about misuse

In case of inadequate or improper use or manipulations of the safety switchgear, personal hazards or damages to machinery or plant components cannot be excluded. The relevant requirements of the standard EN 1088 must be observed.

1.7 Exclusion of liability

We shall accept no liability for damages and malfunctions resulting from defective mounting or failure to comply with this operating instructions manual. The manufacturer shall accept no liability for damages resulting from the use of unauthorised spare parts or accessories.

For safety reasons, invasive work on the device as well as arbitrary repairs, conversions and modifications to the device are strictly forbidden; the manufacturer shall accept no liability for damages resulting from such invasive work, arbitrary repairs, conversions and/or modifications to the device.

2 Product description

2.1 Ordering code

This operating instructions manual applies to the following types:

BNS 260-①②Z③-④-⑤-⑥		
No.	**Option**	**Description**
①		Safety contacts:
	11	1 NO contact / 1 NC contact
	02	2 NC contacts
②		Signalling contacts:
		no signalling contact
	/01	1 NC contact
③		without LED
	G	with LED
④		Connecting cable
	ST	Integrated connector
⑤	L	Door hinge on the left-hand side
	R	Door hinge on the right-hand side
⑥	LST-2715	Connecting cable (2 m) with connector HAN Q5

2.2 Special versions

For special versions, which are not listed in the order code below 2.1, these specifications apply accordingly, provided that they correspond to the standard version.

2.3 Destination and use

The BNS 260 safety sensor is designed for application in safety circuits and is used for monitoring the position of movable safety guards to EN 1088 and IEC 60947-5-3.To actuate the safety sensors, only the BPS 260-1 or BPS 260-2 actuators can be used, conventional magnets are not suitable.

Only the entire system consisting of the safety sensor (BNS 260), the actuator (BPS 260-1 or BPS 260-2) and the safety-monitoring module (AES, SRB) meets the requirements of the standard IEC 60947-5-3.

The safety switches are used for applications, in which the hazardous situation is terminated without delay when the safety guard is opened.

Connecting multiple safety sensors to one AES safety-monitoring module is technically possible. To connect multiple safety sensors (check if authorised!), the NO contacts are wired parallel and the NC contacts in series. The Protect-IE-11 or -02 or PROTECT-PE-11 (-AN) input expander module can be used to connect up to 4 safety sensors with NC/NC or NC/NO contacts.

BNS 260 safety sensors equipped with LED's shall not be wired in series, except with the Protect-IE input expander module. As a result of this, the luminosity of the LED's would considerably decrease and the voltage could drop below the minimum input voltage of the downstream safety-monitoring module.

Recommended suitable safety-monitoring modules

BNS 260-...	**in combination with**
-11Z(G), -11/01Z(G):	AES 11../12../13../21../22../23../ AES 25../3075 SRB 202CA, -CA/T, -CA/Q, -CA/QT SRB 400CA, CA/T, -CA/Q, -CA/QT SRB 211AN V.2, SRB 207AN,
-11Z, -11/01Z (without LED):	SRB 301AN, AES 1337
-11/01Z (without LED):	AES 1102, 1112, 6112, 7112
-02Z(G), -02/01Z(G):	AES 1135*/AES 1235* SRB 202CS, -CS/T SRB 211ST V.2, SRB 211LT SRB 400CS, -CS/T, SRB 301 LC/B, SRB 301MC
-02Z, -02/01Z (without LED):	SRB 219IT, SRB 308IT, SRB 301ST

* Switching the AES safety-monitoring module over to two NC contacts - refer to the mounting and wiring instructions of the AES (no cross-wire short detection)

In case of series-wiring at SRB max. 1 sensor with LED indication for U_N.

In the elevator construction, the BNS 260 safety sensor is used in combination with the AES 9107 safety-monitoring module.

2.4 Technical data

Standards:	IEC 60947-5-3, EN ISO 13849-1, BG-GS-ET-14
Enclosure:	glass-fibre reinforced thermoplastic
Protection class:	IP 67 to EN 60529
Termination:	LIYY cable or M8 connector
Connecting cable:	4 x 0.25 mm² with signalling contact: 6 x 0.25 mm²
Version with integrated connector:	M8 x 1, 4-pole with signalling contact: M8 x 1, 6-pole
Tightening torque for connectors:	max. 0.3 Nm
Connecting cable with Harting-connector:	4 x 0.25 mm2; HAN Q5, 6-pole
Operating principle:	magnetic
Actuator:	BPS 260-1, BPS 260-2, coded
Limit distances:	
assured switching distance s_{ao}:	5 mm
assured switch-off distance s_{ar}:	15 mm
Switching condition indication:	LED only with ordering suffix G
Switching voltage:	without LED: max. 75 VDC with LED: max. 24 VDC with 6-pole connector: max. 30 V
Switching current:	without LED: max. 400 mA with LED: max. 10 mA
Switching capacity:	without LED: max. 10 VA with LED: max. 240 mW
Ambient temperature:	-25 °C ... +70 °C
Storage and transport temperature:	-25 °C ... +70 °C
Max. switching frequency:	5 Hz
Resistance to shock:	30 g / 11ms
Resistance to vibrations:	10 ... 55 Hz, amplitude 1 mm

c UL us

For use in NFPA 79 Applications only. Adapters providing field wiring means are available from the manufacturer. Refer to manufacturers information.

2.5 Safety classification

Standards:	EN ISO 13849-1
B_{10d} (NC/NO contact):	25,000,000
Service life:	20 years

$$MTTF_d = \frac{B_{10d}}{0{,}1 \times n_{op}} \qquad n_{op} = \frac{d_{op} \times h_{op} \times 3600\ s/h}{t_{cycle}}$$

(Specifications can vary depending on the application-specific parameters h_{op}, d_{op} and t_{cycle} as well as the load.)

An individual switch can be used in a category 3 or 4 architecture up to PL e.

3 Mounting

3.1 General mounting instructions

- Fitting is only authorised in a de-energised condition
- Do not use the sensor and the actuator as a mechanical backstop.
- Any mounting position, provided that the active surfaces are opposite
- Inseparably fix the sensor and the actuator to the safety guard
- Exclusively mount the safety sensor on flat surfaces to avoid tensile stresses that could damage the sensor or lead to varying switching distances
- Do not install the safety sensor and the actuator in strong magnetic fields
- If possible, do not mount the sensor and the actuator on ferromagnetic material. A non-magnetic spacer of at least 5 mm thick or the original spacer must be used. The use of non-magnetic fixing screws is recommended as well.

Do not subject the safety sensor and actuator to extreme vibrations and shocks.

- Keep away from metal chips
- The mounting distance between two sensors should always be at least 50 mm

3.2 Dimensions

All measurements in mm.

Sensor with connector, door hinge on the right-hand side

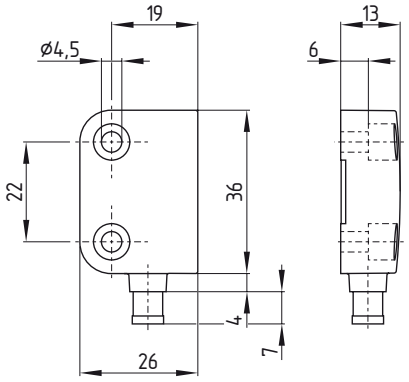

Sensor with cable, door hinge on the left-hand side

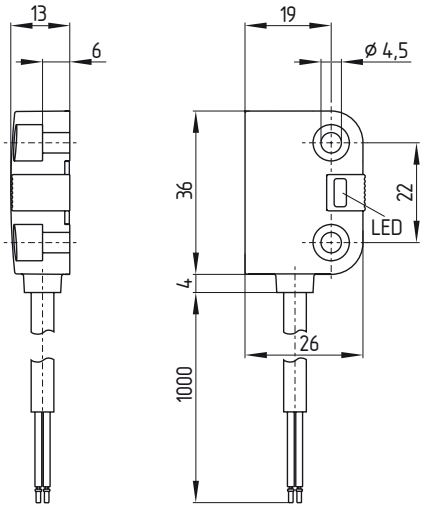

Actuator

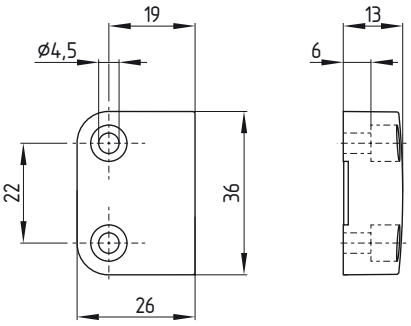

3.3 Axial misalignment

A horizontal and vertical misalignment of the safety sensor and the actuator is tolerated. The possible misalignment depends on the distance of the active surfaces of the sensor and the actuator. The sensor remains active within the tolerance range.

The specified switching distances refer to opposedly mounted safety sensors and actuators.

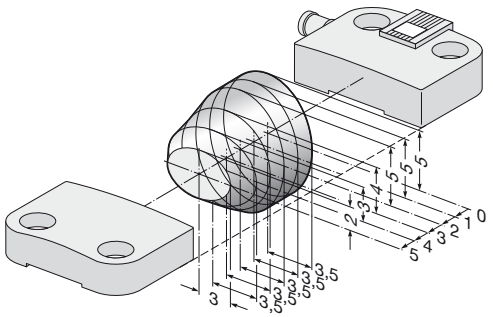

BPS 260-1

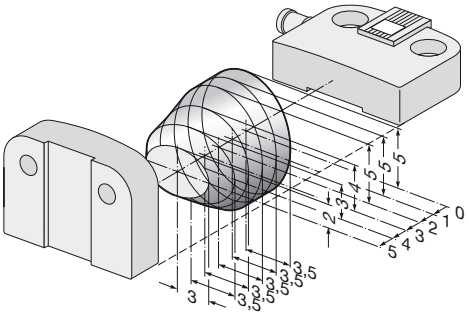

BPS 260-2

assured switching distance: s_{ao} = 5 mm
assured switch-off distance: s_{ar} = 15 mm

3.4 Adjustment

The LED of the BNS 260 variants can only be used as a rough setting tool. The proper functionality of both safety channels must be checked by means of the connected safety-monitoring module.

4 Electrical connection

4.1 General information for electrical connection

The electrical connection may only be carried out by authorised personnel in a de-energised condition.

The safety sensors must be wired in accordance with the wire colours or the pin configuration.

4.2 Contact variants

The contact position shows the actuated sensor function when the safety guard is closed. For safety sensors with LED, the LED is illuminated when the safety guard is closed. The contact configurations of the versions with or without LED are identical.

Safety contacts: S21-S22 and S11-S12 or S13-S14
Signalling contact: S31-S32

The numbers between brackets indicate the PIN configuration of the versions with integrated connector; indication of the wire colours for the version with cable.

BNS 260-02Z(G)

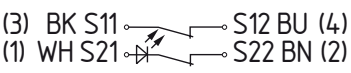

BNS 260-11Z(G)

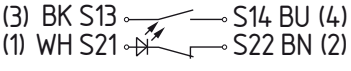

BNS 260-02/01Z(G)

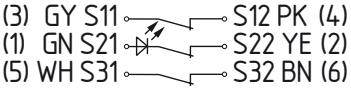

BNS 260-11/01Z(G)

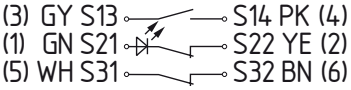

BNS 260-11Z-L-LST-2715

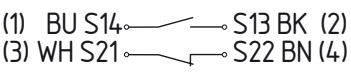

4.3 Connector plug

Integrated connector

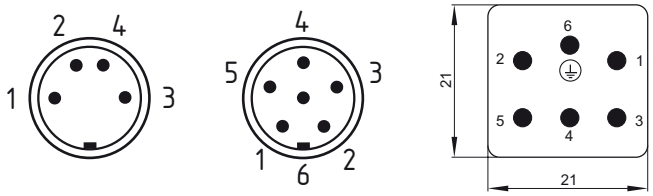

Accessories: connecting cable with M 8 coupling

4-pole			2 m	5 m	10 m
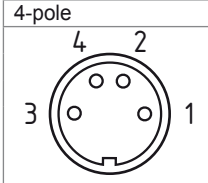	1 BN 2 WH	straight	1155284	1178554	-
	3 BU 4 BK	angled	1204903	1204904	-

6-pole			2 m	5 m	10 m
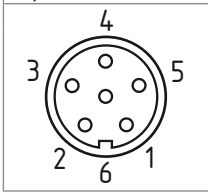	1 GN 2 YE 3 GY	straight	1206010	1206011	1206012
	4 PK 5 WH 6 BN	angled	1206013	1206014	1206015

Accessory: Y-adapter BNS-Y-11

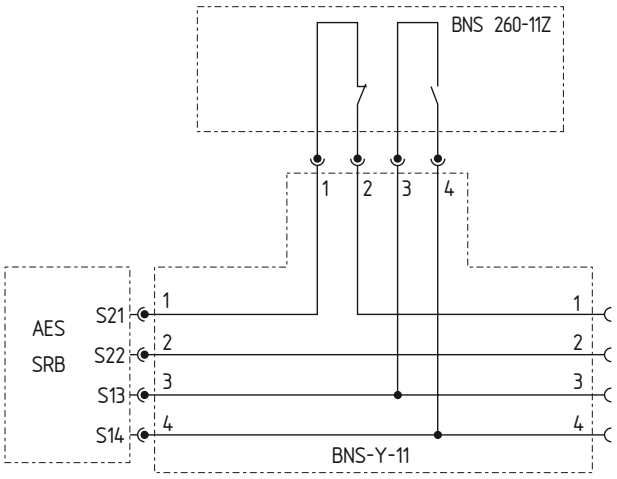

Accessory: Y-adapter BNS-Y-02

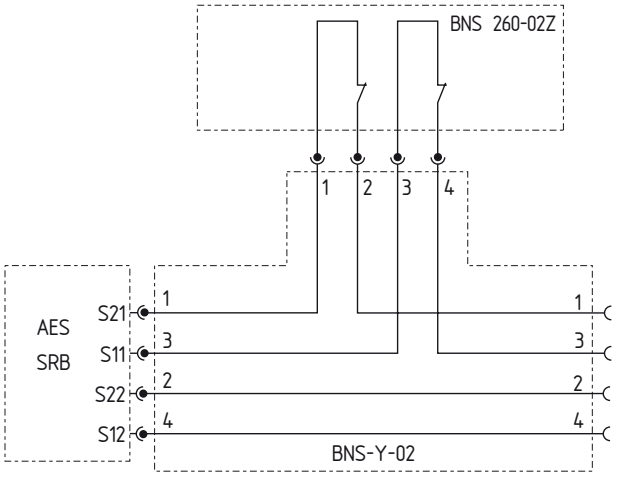

5 Set-up and maintenance

5.1 Functional testing

The safety function of the safety components must be tested. The following conditions must be previously checked and met:
1. Fitting of the sensor and the actuator
2. Fitting and integrity of the power cable
3. The system is free of dirt and soiling (in particular metal chips)

5.2 Maintenance

In the case of correct installation and adequate use, the safety sensor features maintenance-free functionality. A regular visual inspection and functional test, including the following steps, is recommended:
• Check the fitting of the sensor and the actuator
• Remove possible metal chips
• Check the cable for damage.

Damaged or defective components must be replaced.

6 Disassembly and disposal

6.1 Disassembly

The safety switchgear must be disassembled in a de-energised condition only.

6.2 Disposal

The safety switchgear must be disposed of in an appropriate manner in accordance with the national prescriptions and legislations.

7.1 EC Declaration of conformity

SCHMERSAL

EC Declaration of conformity

Translation of the original operating instructions

K.A. Schmersal GmbH
Industrielle Sicherheitsschaltsysteme
Möddinghofe 30, D-42279 Wuppertal
Germany
Internet: www.schmersal.com

We hereby certify that the hereafter described safety components both in its basic design and construction conform to the applicable European Directives.

Name of the safety component / type:	BNS 260
Description of the safety component:	Coded safety-sensor with magnetic operating principle in combination with the AES / SRB safety-monitoring modules from Schmersal or an equivalent safety-oriented control system fulfilling the requirements of the IEC 60947-5-3.
Harmonised EC-Directives:	2006/42/EC EC-Machinery Directive
Person authorized for the compilation of the technical documentation:	Ulrich Loss Möddinghofe 30 42279 Wuppertal
Place and date of issue:	Wuppertal, March 16, 2010



Authorised signature
Heinz Schmersal
Managing Director

BNS 260-C-EN

Note
The currently valid declaration of conformity can be downloaded from the internet at www.schmersal.net.

CE

K. A. Schmersal GmbH
Industrielle Sicherheitsschaltsysteme
Möddinghofe 30, D - 42279 Wuppertal
Postfach 24 02 63, D - 42232 Wuppertal

Telefon +49 - (0)2 02 - 64 74 - 0
Telefax +49 - (0)2 02 - 64 74 - 1 00
E-Mail: info@schmersal.com
Internet: http://www.schmersal.com