NUP 307 ECP

Popular item
SKF Explorer

Dimensions

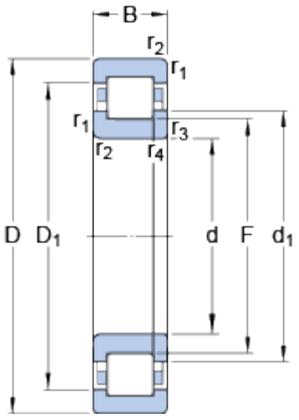

d		35	mm
D		80	mm
B		21	mm
d_1	≈	51	mm
D_1	≈	65.8	mm
F		46.2	mm
$r_{1,2}$	min.	1.5	mm
$r_{3,4}$	min.	1.1	mm

Abutment dimensions

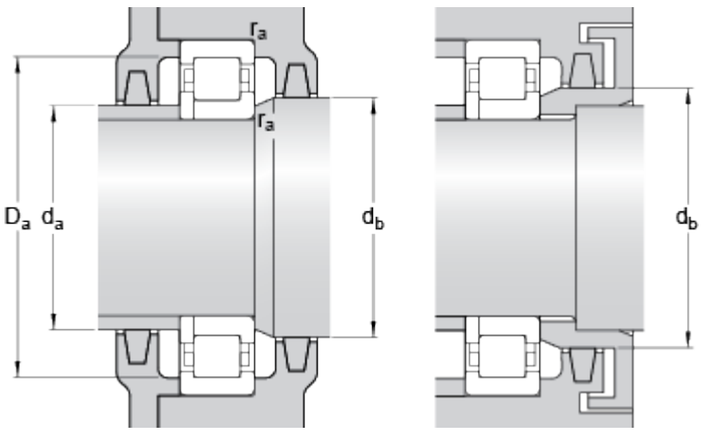

d_a	min.	44	mm
d_b	min.	53	mm
D_a	max.	72.2	mm
r_a	max.	1.5	mm

Calculation data

Basic dynamic load rating	C	75	kN
Basic static load rating	C_0	63	kN
Fatigue load limit	P_u	8.15	kN
Reference speed		9500	r/min
Limiting speed		11000	r/min
Calculation factor	k_r	0.15	
Limiting value	e	0.2	
Axial load factor	Y	0.6	

Mass

Mass bearing	0.49	kg