# IQ2001

## Inductive sensor

IQ23008BAPKG/2M/PUR

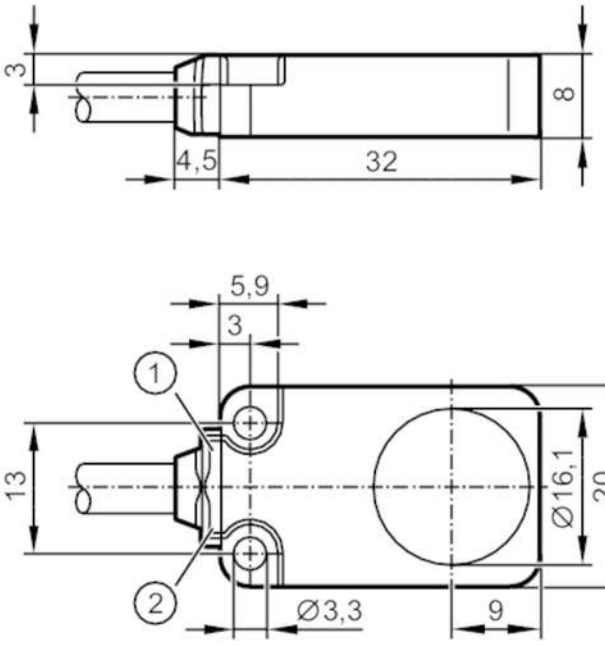


1 LED green
2 LED yellow

| | | |
|---|---|---|
| **Product characteristics** | | |
| Electrical design | | PNP |
| Output function | | normally closed |
| Sensing range | [mm] | 8 |
| Housing | | rectangular |
| Dimensions | [mm] | 20 x 8 x 32 |
| **Application** | | |
| Special feature | | Drag chain suitability; Increased sensing range |
| **Electrical data** | | |
| Operating voltage | [V] | 10...30 DC |
| Current consumption | [mA] | < 10 |
| Protection class | | III |
| Reverse polarity protection | | yes |
| **Outputs** | | |
| Electrical design | | PNP |
| Output function | | normally closed |
| Max. voltage drop switching output DC | [V] | 2.5 |
| Permanent current rating of switching output DC | [mA] | 100 |
| Switching frequency DC | [Hz] | 400 |
| Short-circuit protection | | yes |
| Overload protection | | yes |

# IQ2001

## Inductive sensor

IQ23008BAPKG/2M/PUR

| | | | |
|---|---|---|---|
| **Detection zone** | | | |
| Sensing range | [mm] | 8 | |
| Real sensing range Sr | [mm] | 8 ± 10 % | |
| Operating distance | [mm] | 0...6.48 | |
| Increased sensing range | | yes | |
| **Accuracy / deviations** | | | |
| Correction factor | | steel: 1 / stainless steel: 0.7 / brass: 0.5 / aluminium: 0.4 / copper: 0.3 | |
| Hysteresis | [% of Sr] | 1...15 | |
| Switch point drift | [% of Sr] | -10...10 | |
| **Operating conditions** | | | |
| Ambient temperature | [°C] | -40...85 | |
| Protection | | IP 65; IP 66; IP 67; IP 68 | |
| **Tests / approvals** | | | |
| EMC | | EN 61000-4-2 ESD | 4 kV CD / 8 kV AD |
| | | EN 61000-4-3 HF radiated | 10 V/m |
| | | EN 61000-4-4 Burst | 2 kV |
| | | EN 61000-4-6 HF conducted | 10 V |
| | | EN 55011 | class B |
| Vibration resistance | | EN 60068-2-6 Fc | 20 g (10...3000 Hz) / 50 sweep cycles, 1 octave per minute, in 3 axes |
| Shock resistance | | EN 60068-2-27 Ea | 100 g 11 ms half-sine; 3 shocks each in every direction of the 3 coordinate axes |
| Continuous shock resistance | | EN 60068-2-27 | 40 g 6 ms; 4000 shocks each in every direction of the 3 coordinate axes |
| Fast temperature change | | EN 60068-2-14 Na | TA = -40°C; TB = 85°C; t1 = 30 min; t2 = < 10 s 50 cycles |
| MTTF | [years] | 1688 | |
| UL approval | | Ta | -25...70 °C |
| | | Enclosure type | Type 1 |
| | | power supply | Limited Voltage/Current |
| | | UL Approval no. | A015 |
| | | File number UL | E174191 |
| **Mechanical data** | | | |
| Weight | [g] | 79.6 | |
| Housing | | rectangular | |
| Mounting | | flush mountable | |
| Dimensions | [mm] | 20 x 8 x 32 | |
| Materials | | diecast zinc special coating; sensing face: PBT orange; LED window: TPU; potting: PUR | |
| Drag chain suitability | | yes | |
| Drag chain suitability | | bending radius for flexible use | min. 10 x cable diameter |
| | | bending cycles | > 5 Mio. |
| **Displays / operating elements** | | | |
| Display | | Display operation | 1 x LED, green |
| | | switching status | 1 x LED, yellow |
| **Remarks** | | | |
| Pack quantity | | 1 pcs. | |

# IQ2001

## Inductive sensor

**IQ23008BAPKG/2M/PUR**

## Electrical connection

Cable: 2 m, PUR, Ø 4.9 mm; 3 x 0.34 mm²

### Connection

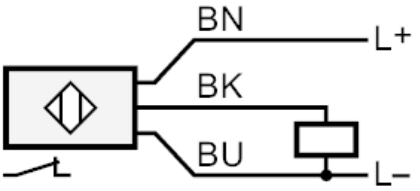


| | |
|---|---|
| BK | black |
| BN | brown |
| BU | blue |