Actuator and Sensor Cable, PUR
Extension Cable
RKC8.302T-1.5-RSC4T/TXL320

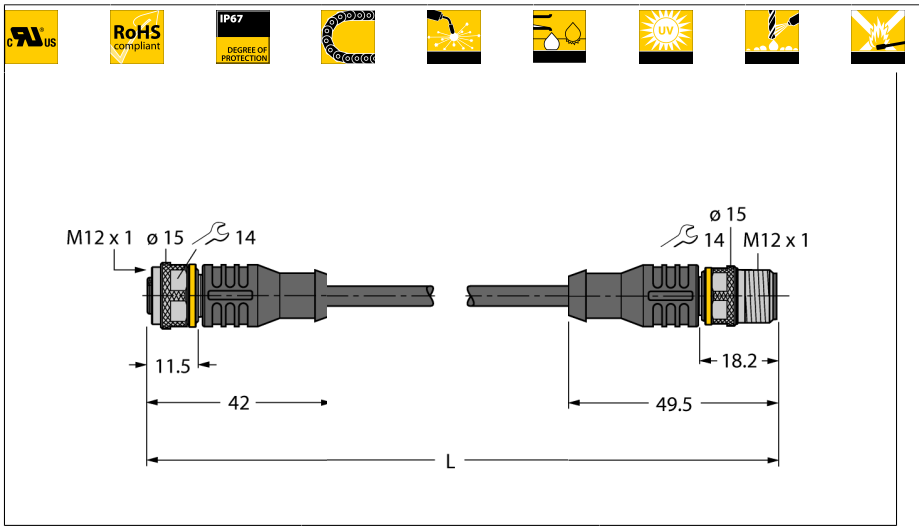

- **Female M12, straight, 3-pin**
- **Adapter cable for connection of the SSI and the incremental encoder**
- **Male M12, straight, 4-pin**
- **Sheath material: PUR**
- **Sheath color: black**
- **Qualified for drag chain use**
- **Resistant to weld splatter**
- **Resistant to chemicals, UV radiation and oils**
- **Flame retardant**
- **Free from halogen, silicone, PVC and LABS**
- **Particularly resistant to abrasion**
- **Approval: cULus**
- **RoHS conform**
- **Protection class IP67**
- **Without label holders**
- **Cable length: 1.5 m**

Type designation	RKC8.302T-1.5-RSC4T/TXL320
Ident no.	6625003
Connector A	Female, M12×1, Straight
Number of pins	3
Contacts	Brass, CuZn, Gold-plated
Contact carriers	Plastic, TPU, Black
Connector body	Plastic, TPU, Black
Coupling nut/screw	Brass, CuZn, Nickel-plated
Seal	Plastic, FPM/FKM
Protection class	IP67, A + B side screwed together
Mechanical lifespan	> 100 Mating cycles
Pollution degree	3
Tightening torque	0.8 … 1 Nm
	(observe max. torque of mating connector!)
Connector B	Male, M12×1, Straight
Number of pins	3 pins
Contacts	Brass, CuZn, Gold-plated
Contact carriers	Plastic, TPU, Black
Connector body	plastic, TPU, Black
Coupling nut/retaining screw	Brass, CuZn, Nickel-plated
Protection class	IP67, only in screwed state
Mechanical lifespan	> 100 Mating Cycles
Pollution degree	3
Tightening torque	0.8 … 1 Nm
	(observe max. torque of mating connector!)
General data	
Cable diameter	4.3 ± 0.20mm
Cable length	1.5 m
Cable quality	PUR
Cable color	Black
Conductor insulation	PP
Conductor colors	BN, BU, BK
Core cross-section	3x0.34
Arrangement of strands	42x0.1
Electrical properties at +20 °C	
Current	4 A
Rated voltage	250 V
Insulation resistance	> 30.5 MΩ/km
Test voltage	2000 V
Forward resistance	max. 57 Ω/km

Cable Cross-section

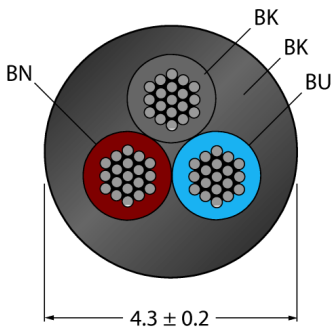

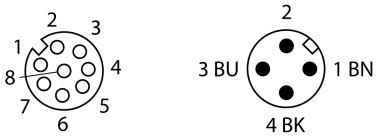

General information

Drawing shows design status including hexagon coupling nut

(Production start CW11/2016).

Circuit Diagram

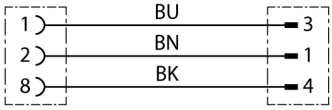

Edition • 2018-05-21T01:34:57+02:00

Actuator and Sensor Cable, PUR
Extension Cable
RKC8.302T-1.5-RSC4T/TXL320

Mechanical and chemical properties	
Bending cycles	> 5 mil.
Bending radius (stationary laying)	> 5 x Ø
Bending radius (flexible use)	> 10 x Ø
Admissible acceleration	max. 5 m/s²
Admissible travel path, horizontal	5 m (at 5 m/s^2)
Admissible travel path, vertical	2 m (at 5 m/s^2)
Admissible traversing speed	3.3 m/s
Torsional stress	± 180 °/m
Ambient temperature	
Stationary	-50…+80°C
In motion	-25…+80°C
Drag chain operation	-25…+60°C

Edition • 2018-05-21T01:34:57+02:00

 Hans Turck GmbH & Co.KG ● D-45472 Mülheim an der Ruhr ● Witzlebenstraße 7 ● Tel. 0208 4952-0 ● Fax 0208 4952-264 ● more@turck.com ● www.turck.com

Accessories

Type code	Ident no.	Description	
TORQUE-WRENCH-SET-AS	6936170	Torque wrench set; handles with adjustable torque 0.4-1.0 Nm, torque wrench for M8 (SW9), fork wrench for M12 (SW 14)	

Edition • 2018-05-21T01:34:57+02:00