

Safety relay, 24 V DC, 14DI, 4DO relays, easyNet

Part no. ES4P-221-DRXX1
Article no. 111018
Catalog No.

Powering Business Worldwide

Delivery programme

Product range			Control relays for safety applications
Basic function			easy800 with safety function blocks
Features			
Safety functions			Stopping in the event of an emergency Protective door Electro-sensitive protective equipment (ESPE) ESPE with muting function two-hand Highest speed monitoring Zero speed monitoring Safety timing relay Mode selection Enabling switch Feedback circuit
Display & keypad			-
Mounting width		mm	107.5
Safety related characteristics			PL e SIL 3, SILCL 3 Cat. 4
Real time clock			✔
Supply voltage	U_s		24 V DC
Networking			easyNet/easyLink
Safety/standard circuit diagram			✔/✔
Instructions			Expandable: standard inputs/outputs and standard bus systems
			individual laser inscription with ES4-COMBINATION possible →#2011790
Inputs (safety)			14
Outputs (safety)			
6 A relay			
			4
Test signal			4

Approvals

Product Standards	IEC/EN see Technical Data; UL 508; CSA-C22.20.4-04; CSA-22.2 No. 142-MI1987; CE marking
UL File No.	CSA report applies to both US and Canada
UL Category Control No.	NRAQ
CSA File No.	012528
CSA Class No.	2252-81; 2252-01
North America Certification	CSA certified, certified by CSA for use in the US
Degree of Protection	IEC: IP20, UL/CSA Type: -

General

Standards			EN 50178 EN 55011 EN 55022 IEC/EN 61000-4, IEC/EN 61000-6 IEC 60068-2-6 EN ISO 954-1: 1996, Category 4 EN ISO 13849-1: 2008, PL e (Performance Level) IEC/EN 61508, SIL3 (Safety Integrity Level) IEC/EN 62061, SILCL 3 (Safety integrity level claim limit)+AC:2010
Dimensions (W x H x D)		mm	107.5 (6 TE) x 90 x 72
Weight		kg	0.38
Mounting			Top-hat rail IEC/EN 60715, 35 mm or screw fixing using fixing brackets ZB4-101-GF1 (accessories)

Times

Inputs			
Max. duration of external test pulde		ms	1

Semi-conductor output			
Off test pulse		ms	< 1
Off-delay		ms	< 1

Terminal capacities

Solid		mm^2	0.2/4 (AWG 22 - 12)
Flexible with ferrule		mm^2	0.2/2.5 (AWG 22 - 12)
Standard screwdriver		mm	3.5 x 0.8
Max. tightening torque		Nm	0.6

Climatic environmental conditions

Operating ambient temperature		°C	-25 to + 55 cold as per IEC 60068-2-1 heat as per IEC 60068-2-2 Damp heat – constant to IEC 60068-2-78 – cyclical to ICE 60068-2-30
Condensation			Take appropriate measures to prevent condensation
Ambient temperature		°C	
Storage	ϑ	°C	-40 - +70
relative humidity		%	5 - 95 in accordance with IEC 60068-2-30, IEC 60068-2-78 Non-condensing
Air pressure (operation)		hPa	795 - 1080

Ambient conditions, mechanical

Degree of protection			IP20 (IEC/EN 60529, EN50178, VBG 4)
Constant amplitude 0.15 mm		Hz	
constant amplitude		Hz	10 - 57 (0.15 mm)
constant acceleration		Hz	57 - 150 (2g)
Vibrations		Hz	In accordance with IEC 60068-2-6
Mechanical shock resistance		g	18 shocks Sinusoidal 15 g/11 ms according to IEC 60068-2-27
Drop to	Drop height	mm	50 (IEC/EN 60068-2-31)
Free fall, packaged		m	0,3 (IEC/EN 61131-2)

Electromagnetic compatibility (EMC)

Electromagnetic compatibility			As per ICE 62061, increased EMC requirements for safety-relevant functions
Overvoltage category/pollution degree			III/2
Electrostatic discharge (ESD)			
applied standard			according to IEC EN 61000-4-2
Air discharge		kV	15
Contact discharge		kV	8
Electromagnetic fields (RFI)		V/m	30 to IEC EN 61000-4-3
Radio interference suppression			EN 55011 Class B, EN 55022 Class B
Burst		kV	according to IEC/EN 61000-4-4 Supply cables: 4 Signal cables: 4
power pulses (Surge)			2 kV (supply cables, symmetrical) 4 kV (semi-conductor outputs, symmetrical) In accordance with IEC 62061
Immunity to line-conducted interference		V	20, in accordsnce with IEC/EN 61000-4-6

Insulation resistance

Clearance in air and creepage distances			EN 50178, UL 508, CSA C22.2, No. 142, EN 60664-1:2003
Insulation resistance			EN 50178

Back-up of real-time clock

Back-up of real-time clock			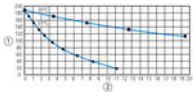
			① Backup time (hours) with fully charged double layer capacitor ② Service life (years)
Accuracy of the real-time clock		s/ day	Normally ±2 (±0.5 h/year), may vary up to ±5 s/day depending on the ambient temperature

Accuracy

Resolution			
Range “S”		ms	50
Range “M:S”		s	1
Range “H:M”		min	1

Repetition accuracy

Resolution			
Range “S”		ms	50
Range “M:S”		s	1
Range “H:M”		min	1

Retentive memory

Read/write cycles (minimum)			10000000000 (10^{10})

Power supply

Rated operational voltage	U_e	V	24 DC (-15/+20%)
Permissible range	U_e		20.4 - 28.8 V DC
Input current			
Input current 115/230 V AC		mA	< 250
Voltage dips		ms	≤ 10 (IEC/EN 61131-2)
Heat dissipation		W	< 6
Potential isolation			From the inputs: yes: no from the outputs: yes to PC interface: no to easyLink:no to easyNet: yes

Network easyNet

Stations		Number	max. 8
Data transfer rate/distance			1000 kBit/s, 6 m 500 kBit/s, 25 m 250 kBit/s, 40 m 125 kBit/s, 125 m 50 kBit/s, 300 m 20 kBit/s, 700 m 10 kBit/s, 1000 m
Potential isolation			
Potential isolation between inputs and internal power supply			yes
Potential isolation			from power supply: yes From the inputs: yes from the outputs: yes to PC interface: yes to memory card: yes to easyLink: no to easyNet: yes
Bus termination			yes (first and last station)
Connection technique			RJ45, 8-pole

Digital inputs 24 V DC

Number			14
Potential isolation			from power supply: no between digital inputs: no from the outputs: yes to the interface: no to the memory card: no to easyLink: no to easyNet: yes
Rated signal voltage	U_e	V DC	24
On 0 signal	U_e	V DC	< 5
On 1 signal	U_e	V DC	> 15,0
Input current on 1 signal			
IS1 - IS14		mA	5.7 (at 24 V DC)
Hardware delay time from 0 to 1		ms	
			Debounce ON: 24 Debounce OFF: 0.06 (IS1, IS2), 0.17 (IS3 to IS14)
Hardware delay time from 1 to 0		ms	

			Debounce ON: 24 Debounce OFF: 0.08 (IS1, IS2), 0.22 (IS3 to IS14)
Cable length (unscreened)		m	100
Single cable length of test signal output to the device input (shielded)		m	1000
Total of single cable lengths from one test signal output to the device inputs (shielded)		m	3000
Maximum rotary frequency at device inputs IS1 and IS2, when using function block OM or ZM		Hz	1000
Maximum switching frequency at input (does not apply to I1, I2, if function block SM or OM is used)		Operations/h	900

Test signal outputs

Number			4 (T1 to T4)
Voltage		V DC	24
Potential isolation			No

Relay outputs

			4
Outputs in groups of			1
Safety level			3 redundant relay outputs, 6 months test interval According to EN 50156
Protection of an output relay			Fuse: 6 A gL/gG, Circuit-breaker with C characteristic: 4 A (only permissible with 24V DC), Short-circuit current I_K < 250 A
Potential isolation			from power supply: yes From the inputs: yes between digital inputs: yes to the interface: yes to easyNet: yes to easyLink: yes Safe isolation according to EN 50178: 300 V AC Basic isolation: 600 V AC
Lifespan, mechanical	Operations	x 10^6	10
Contacts			
Conventional thermal current	I_{th}	A	6
Rated impulse withstand voltage U_{imp} of contact coil		kV	6
Rated operational voltage	U_e	V AC	250
Rated insulation voltage	U_i	V AC	250
safe isolation between coil and contact		V AC	300 in accordance with 50178
Switching capacity			DC-13, 24 V DC, 0.1 Hz: 40000 operations (in accordance with IEC 60947-5-1) AC-15, 230 V AC, 3 A: 80000 operations (in accordance with IEC 60947-5-1) DC: B300 (in accordance with UL 508) AC: R300 (in accordance with UL 508)
Switching frequency			
Mechanical operations		x 10^6	10
Switching frequency		Hz	15

Technical data ETIM 5.0

PLC's (EG000024) / Logic module (EC001417)

Electric engineering, automation, process control engineering / Control / Programmable logic control (SPS) / Logic module (ecl@ss8-27-24-22-16 [AKE539010])

Supply voltage AC 50 Hz	V	0 - 0
Supply voltage AC 60 Hz	V	0 - 0
Supply voltage DC	V	20.4 - 28.8
Voltage type of supply voltage		DC
Switching current	A	8
Number of analogue inputs		0
Number of analogue outputs		4
Number of digital inputs		14
Number of digital outputs		4

With relay output			Yes
Number of HW-interfaces industrial Ethernet			0
Number of HW-interfaces PROFINET			0
Number of HW-interfaces RS-232			1
Number of HW-interfaces RS-422			0
Number of HW-interfaces RS-485			0
Number of HW-interfaces serial TTY			0
Number of HW-interfaces USB			0
Number of HW-interfaces parallel			0
Number of HW-interfaces Wireless			0
Number of HW-interfaces other			3
With optical interface			No
Supporting protocol for TCP/IP			No
Supporting protocol for PROFIBUS			No
Supporting protocol for CAN			No
Supporting protocol for INTERBUS			No
Supporting protocol for ASI			No
Supporting protocol for KNX			No
Supporting protocol for MODBUS			No
Supporting protocol for Data-Highway			No
Supporting protocol for DeviceNet			No
Supporting protocol for SUCONET			No
Supporting protocol for LON			No
Supporting protocol for PROFINET IO			No
Supporting protocol for PROFINET CBA			No
Supporting protocol for SERCOS			No
Supporting protocol for Foundation Fieldbus			No
Supporting protocol for EtherNet/IP			No
Supporting protocol for AS-Interface Safety at Work			No
Supporting protocol for DeviceNet Safety			No
Supporting protocol for INTERBUS-Safety			No
Supporting protocol for PROFIsafe			No
Supporting protocol for SafetyBUS p			No
Supporting protocol for other bus systems			Yes
Radiostandard Bluetooth			No
Radiostandard WLAN 802.11			No
Radiostandard GPRS			No
Radiostandard GSM			No
Radiostandard UMTS			No
IO link master			No
Redundancy			Yes
With display			No
Degree of protection (IP)			IP20
Basic device			Yes
Expandable			Yes
Expansion device			No
With timer			Yes
Rail mounting possible			Yes
Wall mounting/direct mounting			Yes
Front build in possible			No
Rack-assembly possible			No
Suited for safety functions			Yes
Category according to EN 954-1			4
SIL according to IEC 61508			3
Performance level acc. to EN ISO 13849-1			Level e

Appendant operation agent (Ex ia)			No
Appendant operation agent (Ex ib)			No
Explosion safety category for gas			None
Explosion safety category for dust			None
Width		mm	107.5
Height		mm	90
Depth		mm	72

Characteristics

PU05907001Z safety manual

Dimensions

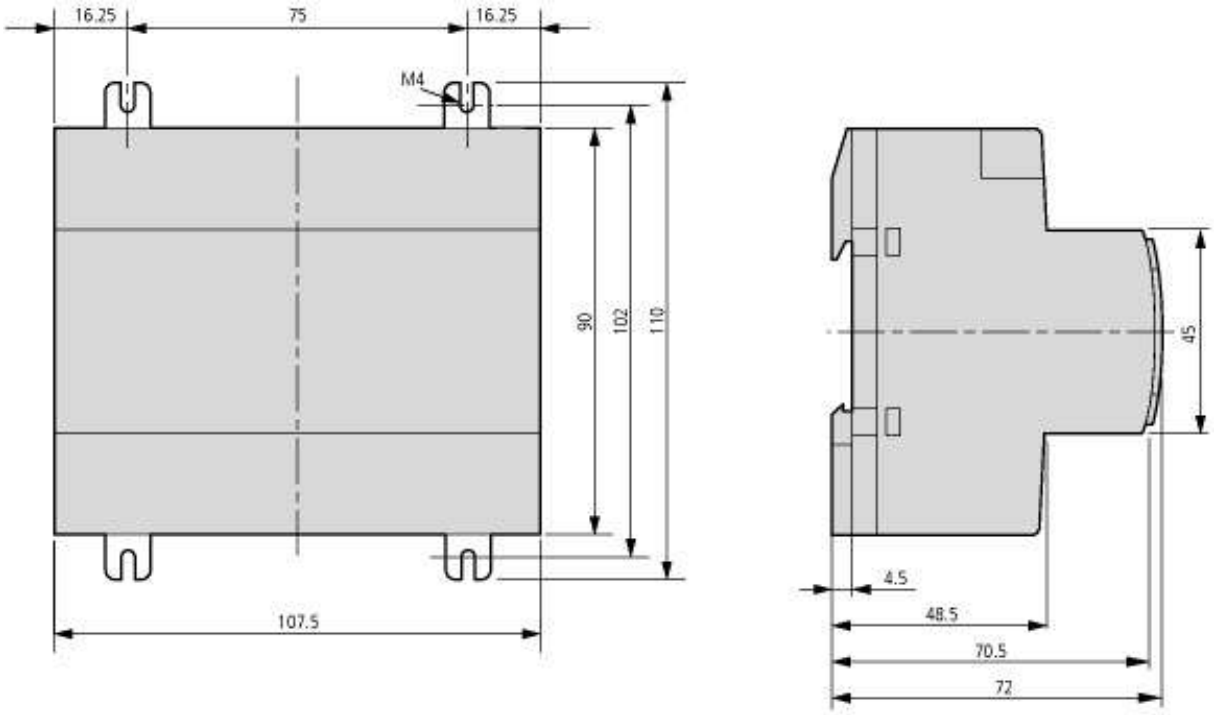

Additional product information (links)

IL05013002Z-EN instructional leaflet for easySafety ES4P safety relays	
IL05013002Z-EN instructional leaflet for easySafety ES4P safety relays	ftp://ftp.moeller.net/DOCUMENTATION/AWA_INSTRUCTIONS/IL05013002Z2011_06.pdf
MN05013001Z-DE Manual control relays suitable for safety applications easySafety ES4P, German	
MN05013001Z-DE Handbuch Sicherheitsgerichtetes Steuerrelais easySafety ES4P, deutsch - Deutsch	ftp://ftp.moeller.net/DOCUMENTATION/AWB_MANUALS/MN05013001Z_DE.pdf
MN05013001Z-DE Manual control relays suitable for safety applications easySafety ES4P, German - English	ftp://ftp.moeller.net/DOCUMENTATION/AWB_MANUALS/MN05013001Z_EN.pdf
MN05013001Z-DE Manuel Module logique de sécurité easySafety ES4P, version allemande - français	ftp://ftp.moeller.net/DOCUMENTATION/AWB_MANUALS/MN05013001Z_FR.pdf
MN05013001Z-DE Manuale relè di comando relativo alla sicurezza easySafety ES4P, tedesco - italiano	ftp://ftp.moeller.net/DOCUMENTATION/AWB_MANUALS/MN05013001Z_IT.pdf
Download easySoft-Safety	http://downloadcenter.moeller.net/de/software.1dabeb75-d41e-442a-b59c-a19bfdae66af
Labeleditor	http://downloadcenter.moeller.net/de/software.f6023a63-5acb-42c7-a51c-ccf99091cace

© 07/2014 by Eaton Industries GmbH