Ecomag

Linear actuator



Benefits

- Compact
- Cost effective
- Silent operation
- Control unit can be mounted to the actuator

Technical data

	Unit	ECO 20/40	ECO 60/80	ECO 30/50	ECO 70/90
Rated push load	N	2 000	6 000	2 000	6 000
Rated pull load	N	0	0	2 000	4 000
Speed (full load to no load)	mm/s	9 to 13	4 to 7	9 to 13	4 to 7
Stroke	mm	50 to 300	50 to 300	50 to 300	50 to 300
Retracted length	mm	S+160	S+160	S+160	S+160
Voltage	V DC	24	24	24	24
Power consumption	W	70	120	70	120
Current consumption	A	4	6	4	6
Duty cycle	%	10 (1/9)	10 (1/9)	10 (1/9)	10 (1/9)
Ambient temperature	°C	+10 to +40	+10 to +40	+10 to +40	+10 to +40
Type of protection	IP	x4S	x4S	x4S	x4S
Weight	kg	2,1	2,1	2,5	2,5
Color	–	Black or grey	Black or grey	Black or grey	Black or grey

Dimensional drawing

Ecomag 2-3-6-7

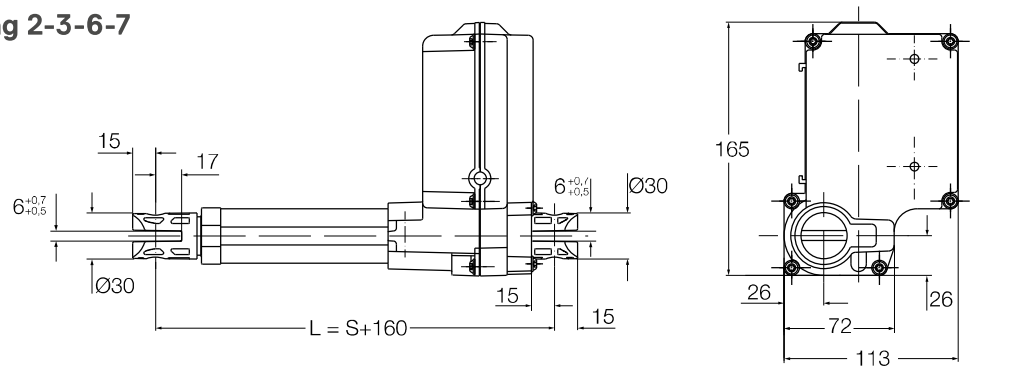

Ecomag 4 -5-8-9

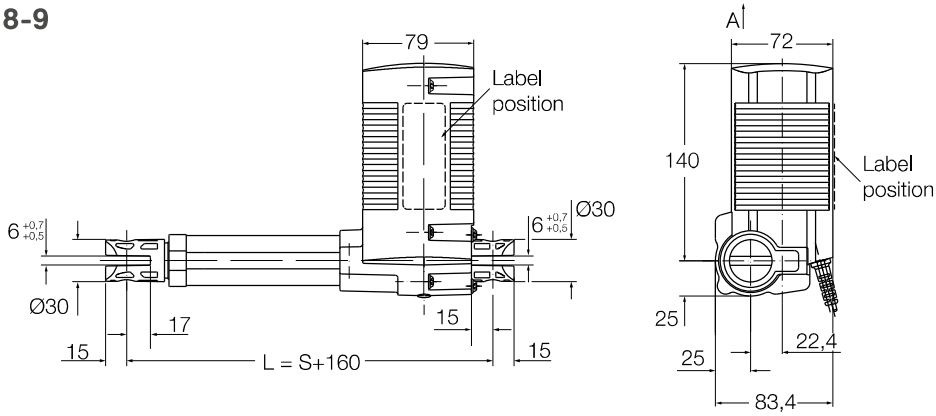

Front attachment push and pull version

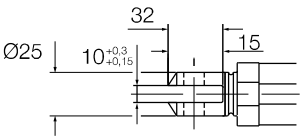

Rear attachment push and pull version

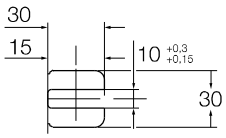

Rear attachment position

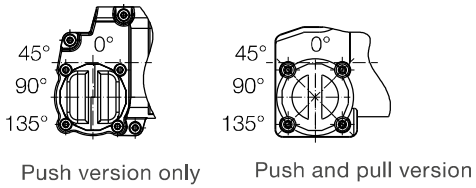

Push version only

Push and pull version

Legend:
S = stroke
L = retracted length

Connecting diagrams

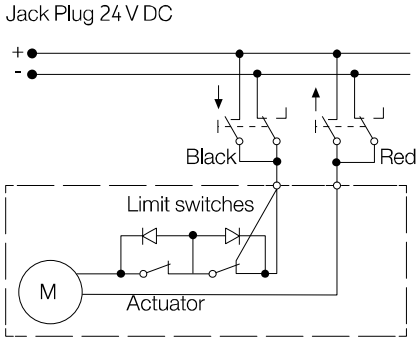

Suitable control units and accessories

ECOMAG	Control units SCU	VCU	BCU	MCU	SEM
Operating switches					
EHA 1				•	
EHA 3	•	•	•		
EHE					•
STJ	•	•	•		
STF				•	
STA				•	
STE	•	•	•		

Hand switch Foot switch Desk switch

Performance diagrams

Speed-load diagram

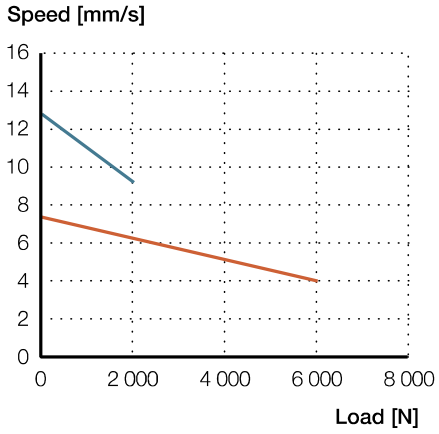

Current-load diagram

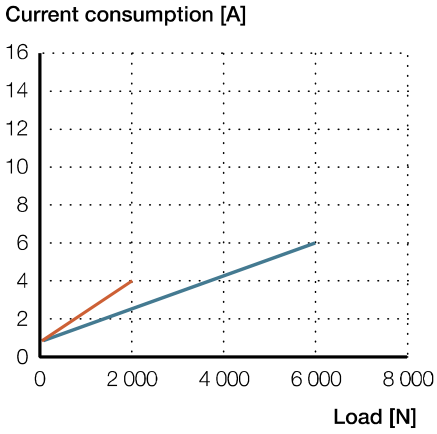

ECO 20 / 30 / 40 / 50 — ECO 60 / 70 / 80 / 90

Safety factor load conditions

Push load reduction safety factor = 4

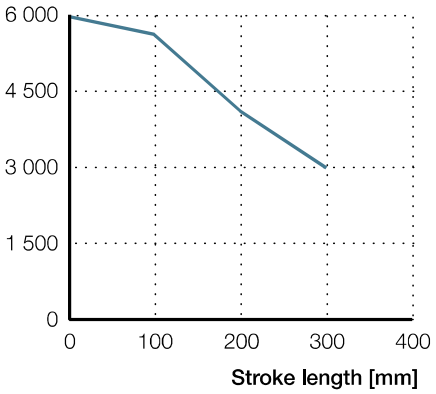

Ordering key

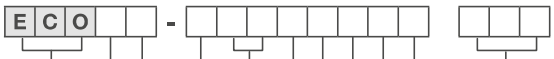

Type

Load /Housing

	Push	Pull	Housing
2	2 000 N	0 N	Large
3	2 000 N	2 000 N	Large
4	2 000 N	0 N	Small
5	2 000 N	2 000 N	Small
6	6 000 N	0 N	Large
7	6 000 N	4 000 N	Large
8	6 000 N	0 N	Small
9	6 000 N	4 000 N	Small

Encoder

0 No encoder, coiled cable, 2-pin Minifit plug or customization
9 No encoder, coiled cable, DIN8 plug or customization
F 2-Hall encoder, 8 pulses, straight cable, DIN8 plug (small housing only)

Current cut-off

0 No
1 Yes (not available for ECO4.-/ECO5.-/ECO8.-/ECO9.-)

Stroke (S)

05 50 mm
10 100 mm
15 150 mm
20 200 mm
25 250 mm
30 300 mm
00 Other stroke lengths; 50<S<300 mm

Front attachment (groove depth 17 mm)

M Hole, Ø12 mm, groove width 10 mm
X Customized

Rear attachment (groove depth 15 mm)

M Hole, w12 mm, groove width 10 mm
X Customized

Orientation of rear attachment

1 0°
3 45°
5 90°
7 135°

Color

A Black
B Grey

Option

0 No option
A Back-up nut (available only for drives with 6 kN, mandatory for IEC 60601-1) – only for ECO 7/9, L = +23 mm

Customization

■ Options shown in red are only available on request. Contact Ewellix for more information on minimum quantities and additional costs.