



SAE Single-Part Blanking Flange 82

BFX-CP



SAE Single-Part Blanking Counterflange 83

BAS-CP



SAE Sandwich Plate with Female BSPP Port 84

SPL-G04-L



SAE Blindplug (Standard) 85

CAG-BP



SAE Blindplug (High) 85

CAG-BPH



SAE Sandwich Plate 86

SPL



SAE Cover Plate 87

CPL



SAE Reducing Flange 88

BFX-BAS



Separate Bolt Sets and Sealings 89

D

SAE Single-Part Blanking Flange
Type BFX-CP ▪ 3000 / 6000 PSI Series



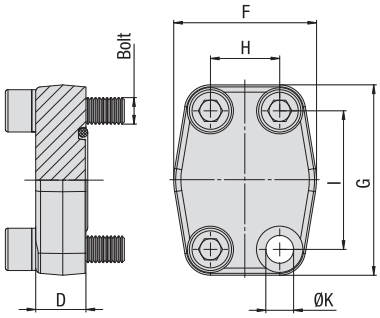

D

3000 PSI Standard Pressure Series (based on ISO 6162-1:2012)

Nominal Size		PN[1] (bar/PSI)	Dimensions (mm/in)						Weight (kg/lbs) ca.	for Bolts		Ordering Codes
DN	(in)	10.9	D	F	G	H	I	ØK[3]	per 100	Metric[3]	UNC	
13	1/2	350	16	47	57	17,5	38,1	8,7	22,3	M8x30	5/16–18 UNC x 1-1/4	BFX-301-CP-W1
		5075	.63	1.85	2.24	.69	1.50	.34	49.06			
19	3/4	350	18	50	67	22,3	47,6	10,5	34,1	M10x35	3/8–16 UNC x 1-1/2	BFX-302-CP-W1
		5075	.71	1.97	2.64	.88	1.87	.41	75.02			
25	1	345	19	54	72	26,2	52,4	10,5	39,9	M10x35	3/8–16 UNC x 1-1/2	BFX-303-CP-W1
		5003	.75	2.13	2.83	1.03	2.06	.41	87.78			
32	1-1/4	280	18	68	82	30,2	58,7	11,5 (13,5)	56,3	M10x40 (M12x40)	7/16–14 UNC x 1-1/2	BFX-304-CP-W1
		4061	.71	2.68	3.23	1.19	2.31	.45 (.53)	123.86			
38	1-1/2	210	20	79	96	35,7	69,9	13,5 (14,5)	89,7	M12x45 (M14x45)	1/2–13 UNC x 1-3/4	BFX-305-CP-W1
		3045	.79	3.11	3.78	1.41	2.75	.53 (.57)	197.34			
51	2	210	20	88	102	42,9	77,8	13,5 (14,5)	105,7	M12x45 (M14x45)	1/2–13 UNC x 1-3/4	BFX-306-CP-W1
		3045	.79	3.46	4.02	1.69	3.06	.53 (.57)	232.54			
64	2-1/2	175	20	101	115	50,8	88,9	13,5 (14,5)	141,5	M12x45 (M14x45)	1/2–13 UNC x 1-3/4	BFX-307-CP-W1
		2538	.79	3.98	4.53	2.00	3.50	.53 (.57)	311.27			
76	3	160	24	127	137	61,9	106,4	17	237,7	M16x50	5/8–11 UNC x 2	BFX-308-CP-W1
		2320	.94	5.00	5.39	2.44	4.19	.67	522.94			
89	3-1/2	35	22	138	155	69,8	120,7	17	280,5	M16x50	5/8–11 UNC x 2	BFX-309-CP-W1
		508	.87	5.43	6.10	2.75	4.75	.67	617.10			
102	4	35	25	147	163	77,8	130,2	17	382,6	M16x50	5/8–11 UNC x 2	BFX-310-CP-W1
		508	.98	5.79	6.42	3.06	5.13	.67	841.72			
127	5	35	28	170	190	92	152,4	17	582,0	M16x55	5/8–11 UNC x 2-1/4	BFX-311-CP-W1
		508	1.10	6.69	7.48	3.62	6.00	.67	1280.40			

Please see Page 89 for separate Bolt Sets and Sealings.

6000 PSI High Pressure Series (based on ISO 6162-2:2012)

Nominal Size		PN[1] (bar/PSI)	Dimensions (mm/in)						Weight (kg/lbs) ca.	for Bolts		Ordering Codes
DN	(in)	10.9	D	F	G	H	I	ØK	per 100	Metric	UNC	
13	1/2	420	16	47	57	18,2	40,5	8,7	22,3	M8x30	5/16–18 UNC x 1-1/4	BFX-601-CP-W1
		6090	.63	1.85	2.24	.72	1.59	.34	49.06			
19	3/4	420	19	54	72	23,8	50,8	10,5	44,0	M10x35	3/8–16 UNC x 1-1/2	BFX-602-CP-W1
		6090	.75	2.13	2.83	.94	2.00	.41	96.80			
25	1	420	24	68	82	27,8	57,2	13	74,8	M12x45	7/16–14 UNC x 1-3/4	BFX-603-CP-W1 [2]
		6090	.94	2.68	3.23	1.09	2.25	.51	164.56			
32	1-1/4	420	27	79	95	31,8	66,6	13,5	117,3	M12x45	1/2–13 UNC x 1-3/4	BFX-604-CP-W1
		6090	1.06	3.11	3.74	1.25	2.62	.53	258.06			
32	1-1/4	420	27	79	95	31,8	66,6	15	118,0	M14x45		BFX-604-CP-M14-W1
		6090	1.06	3.11	3.74	1.25	2.62	.59	259.60			
38	1-1/2	420	30	88	108	36,5	79,3	17	155,0	M16x55	5/8–11 UNC x 2-1/4	BFX-605-CP-W1
		6090	1.18	3.46	4.25	1.44	3.12	.67	341.00			
51	2	420	30	118	137	44,5	96,8	21	267,2	M20x65	3/4–10 UNC x 2-3/4	BFX-606-CP-W1
		6090	1.18	4.65	5.39	1.75	3.81	.83	587.84			
64	2-1/2	420	45	152	180	58,7	123,8	26	758,4	M24x80		BFX-607-CP-W1
		6090	1.77	5.98	7.09	2.31	4.87	1.02	1668.48			
76	3	420	55	178	208	71,4	152,4	33	1201,8	M30x100		BFX-608-CP-W1
		6090	2.17	7.01	8.19	2.81	6.00	1.30	2643.96			

Please see Page 89 for separate Bolt Sets and Sealings.

Materials / Ordering Options / Examples

* SAE Single-Part Blanking Flange (without O-ring) made of Steel S355J2 / C45 or equivalent, blank (oiled)	**BFX-...-CP-W1**
* SAE Single-Part Blanking Flange (without O-ring) made of Stainless Steel V4A – 1.4404 (on request)	**BFX-...-CP-W5**
* Kit including Metric bolts 10.9, spring rings, O-ring made of NBR (Buna-N®)	**BFX-...-CP-W1-K**
* Kit including Metric bolts 10.9, spring rings, O-ring made of FKM (Viton®)	**BFX-...-CP-V-W1-K**
* Kit including UNC bolts (Grade 8), spring rings, O-ring made of NBR (Buna-N®)	**BFX-...-CP-U-W1-K**

[1] The maximum working pressure PN (bar/PSI) applies only to the flange itself and depends on the bolts used (Grade 10.9). The actual maximum working pressure depends on the thickness and the quality of the tube used.

[2] For UNC threaded bolts, use hexagon head bolts only. Please note that these do not belong to our product range.

[3] Alternative options shown in brackets are available on request.

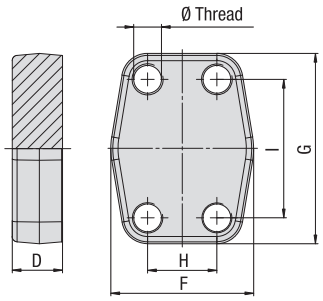

SAE Single-Part Blanking Counterflange
Type BAS-CP ▪ 3000 / 6000 PSI Series



3000 PSI Standard Pressure Series (based on ISO 6162-1:2012)

Nominal Size		PN[1] (bar/PSI)	Dimensions (mm/in)					Weight (kg/lbs) ca.	for Bolts		Ordering Codes
DN	(in)	10.9	D	F	G	H	I	per 100	Metric[3]	UNC	
13	1/2	350	16	47	57	17,5	38,1	25,2	M8	5/16–18 UNC	BAS-301-CP-W1
		5075	.63	1.85	2.24	.69	1.50	55.44			
19	3/4	350	18	50	67	22,3	47,6	31,9	M10	3/8–16 UNC	BAS-302-CP-W1
		5075	.71	1.97	2.64	.88	1.87	70.18			
25	1	345	19	54	72	26,2	52,4	49,1	M10	3/8–16 UNC	BAS-303-CP-W1
		5003	.75	2.13	2.83	1.03	2.06	108.02			
32	1-1/4	280	18	68	82	30,2	58,7	60,0	M10 (M12)	7/16–14 UNC	BAS-304-CP-W1
		4061	.71	2.68	3.23	1.19	2.31	132.00			
38	1-1/2	210	20	79	96	35,7	69,9	83,4	M12 (M14)	1/2–13 UNC	BAS-305-CP-W1
		3045	.79	3.11	3.78	1.41	2.75	183.48			
51	2	210	20	88	102	42,9	77,8	110,6	M12 (M14)	1/2–13 UNC	BAS-306-CP-W1
		3045	.79	3.46	4.02	1.69	3.06	243.32			
64	2-1/2	175	20	101	115	50,8	88,9	145,2	M12 (M14)	1/2–13 UNC	BAS-307-CP-W1
		2538	.79	3.98	4.53	2.00	3.50	319.44			
76	3	160	24	127	137	61,9	106,4	252,4	M16	5/8–11 UNC	BAS-308-CP-W1
		2320	.94	5.00	5.39	2.44	4.19	555.28			
89	3-1/2	35	22	138	155	69,8	120,7	292,8	M16	5/8–11 UNC	BAS-309-CP-W1
		508	.87	5.43	6.10	2.75	4.75	644.16			
102	4	35	25	147	163	77,8	130,2	379,6	M16	5/8–11 UNC	BAS-310-CP-W1
		508	.98	5.79	6.42	3.06	5.13	835.12			
127	5	35	28	170	190	92	152,4	586,3	M16	5/8–11 UNC	BAS-311-CP-W1
		508	1.10	6.69	7.48	3.62	6.00	1289.86			

Please see Page 89 for separate Bolt Sets and Sealings.

6000 PSI High Pressure Series (based on ISO 6162-2:2012)

Nominal Size		PN[1] (bar/PSI)	Dimensions (mm/in)					Weight (kg/lbs) ca.	for Bolts		Ordering Codes
DN	(in)	10.9	D	F	G	H	I	per 100	Metric	UNC	
13	1/2	420	16	47	57	18,2	40,5	25,6	M8	5/16–18 UNC	BAS-601-CP-W1
		6090	.63	1.85	2.24	.72	1.59	56.32			
19	3/4	420	19	54	72	23,8	50,8	49,0	M10	3/8–16 UNC	BAS-602-CP-W1
		6090	.75	2.13	2.83	.94	2.00	107.80			
25	1	420	24	68	82	27,8	57,2	79,5	M12	7/16–14 UNC	BAS-603-CP-W1
		6090	.94	2.68	3.23	1.09	2.25	174.90			
32	1-1/4	420	27	79	95	31,8	66,6	122,4	M12	1/2–13 UNC	BAS-604-CP-W1
		6090	1.06	3.11	3.74	1.25	2.62	269.28			
32	1-1/4	420	27	79	95	31,8	66,6	114,9	M14		BAS-604-CP-M14-W1
		6090	1.06	3.11	3.74	1.25	2.62	252.78			
38	1-1/2	420	30	88	108	36,5	79,3	185,1	M16	5/8–11 UNC	BAS-605-CP-W1
		6090	1.18	3.46	4.25	1.44	3.12	407.22			
51	2	420	30	118	137	44,5	96,8	266,7	M20	3/4–10 UNC	BAS-606-CP-W1
		6090	1.18	4.65	5.39	1.75	3.81	586.74			
64	2-1/2	420	45	152	180	58,7	123,8	774,6	M24		BAS-607-CP-W1
		6090	1.77	5.98	7.09	2.31	4.87	1704.12			
76	3	420	55	178	208	71,4	152,4	737,4	M30		BAS-608-CP-W1
		6090	2.17	7.01	8.19	2.81	6.00	1622.28			

Please see Page 89 for separate Bolt Sets and Sealings.

[1] The maximum working pressure PN (bar/PSI) applies only to the flange itself and depends on the bolts used (Grade 10.9). The actual maximum working pressure depends on the thickness and the quality of the tube used.

[3] Alternative options shown in brackets are available on request.

Materials / Ordering Options / Examples

* SAE Single-Part Blanking Counterflange made of Steel S355J2 or equivalent, blank (oiled) with Metric tapped holes — **BAS-...-CP-W1**
* SAE Single-Part Blanking Counterflange made of Stainless Steel V4A – 1.4404 (on request) with Metric tapped holes — **BAS-...-CP-W5**
* SAE Single-Part Blanking Counterflange made of Steel S355J2 or equivalent, blank (oiled) with size of Metric tapped holes deviating from the standard (e.g. M14) — **BAS-...-CP-M14-W1**
* SAE Single-Part Blanking Counterflange made of Steel S355J2 or equivalent, blank (oiled) with UNC tapped holes — **BAS-...-CP-U-W1**

SAE Sandwich Plate with Female BSPP Port
Type SPL-G04-L ▪ 3000 / 6000 PSI Series



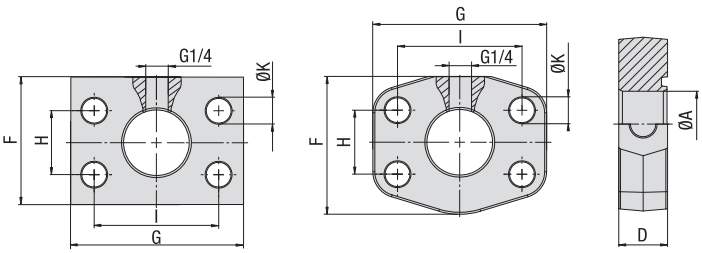

Version A Version B

3000 PSI Standard Pressure Series (based on ISO 6162-1:2012)

Nominal Size		PN[1] (bar/PSI)	Dimensions (mm/in)								Weight (kg/lbs) ca.	Ordering Codes
DN	(in)	10.9	ØA	D	F	G	H	I	ØK	Version	per 100	
13	1/2	350	12	24	40	55	17,5	38,1	8,7	A	30,8	SPL-301-G04-L-W1
		5075	.47	.94	1.57	2.17	.69	1.50	.34		67.76	
19	3/4	350	19	28	50	65	22,3	47,6	10,5	A	52,3	SPL-302-G04-L-W1
		5075	.75	1.10	1.97	2.56	.88	1.87	.41		115.06	
25	1	345	24	25	60	70,6	26,2	52,4	10,5	B	51,2	SPL-303-G04-L-W1
		5003	.94	.98	2.36	2.78	1.03	2.06	.41		112.64	
32	1-1/4	280	31	23	68	82	30,2	58,7	12,5	B	56,4	SPL-304-G04-L-W1
		4061	1.22	.91	2.68	3.23	1.19	2.31	.49		124.08	
38	1-1/2	210	38	24	79	96	35,7	69,9	13,5	B	86,2	SPL-305-G04-L-W1
		3045	1.50	.94	3.11	3.78	1.41	2.75	.53		189.64	
51	2	210	50	24	88	102	42,9	77,8	13,5	B	93,2	SPL-306-G04-L-W1
		3045	1.97	.94	3.46	4.02	1.69	3.06	.53		205.04	

Please see Page 89 for separate Bolt Sets and Sealings.

6000 PSI High Pressure Series (based on ISO 6162-2:2012)

Nominal Size		PN[1] (bar/PSI)	Dimensions (mm/in)								Weight (kg/lbs) ca.	Ordering Codes
DN	(in)	10.9	ØA	D	F	G	H	I	ØK	Version	per 100	
13	1/2	420	12	24	40	55	18,2	40,5	8,7	A	29,0	SPL-601-G04-L-W1
		6090	.47	.94	1.57	2.17	.72	1.59	.34		63.80	
19	3/4	420	19	25	60	70,6	23,8	50,8	10,5	A	53,1	SPL-602-G04-L-W1
		6090	.75	.98	2.36	2.78	.94	2.00	.41		116.82	
25	1	420	25	23	68	82	27,8	57,2	13	B	60,3	SPL-603-G04-L-W1
		6090	.98	.91	2.68	3.23	1.09	2.25	.51		132.66	
32	1-1/4	420	31	25	79	95	31,8	66,6	13,5	B	94,2	SPL-604-G04-L-W1
		6090	1.22	.98	3.11	3.74	1.25	2.62	.53		207.24	
32	1-1/4	420	31	25	79	95	31,8	66,6	15	B	89,2	SPL-604-G04-L-M14-W1
		6090	1.22	.98	3.11	3.74	1.25	2.62	.59		196.24	
38	1-1/2	420	38	28	88	108	36,5	79,3	17	B	147,3	SPL-605-G04-L-W1
		6090	1.50	1.10	3.46	4.25	1.44	3.12	.67		324.06	
51	2	420	50	28	118	137	44,5	96,8	21	B	268,6	SPL-606-G04-L-W1
		6090	1.97	1.10	4.65	5.39	1.75	3.81	.83		590.92	

Please see Page 89 for separate Bolt Sets and Sealings.

Materials / Ordering Options / Examples

* SAE Sandwich Plate with Female BSPP Port (without O-ring) made of Steel S355J2 / C45 or equivalent, blank (oiled) **SPL-...-G04-L-W1**
* SAE Sandwich Plate with Female BSPP Port (without O-ring) made of Stainless Steel V4A – 1.4404 (on request) **SPL-...-G04-L-W5**

Use the female BSPP port of the SAE Sandwich Plate to permanently install a pressure sensor, a hydraulic test coupling or any sort of diagnostic equipment in your hydraulic system. Contact STAUFF for details.

[1] The maximum working pressure PN (bar/PSI) applies only to the flange itself and depends on the bolts used (Grade 10.9).

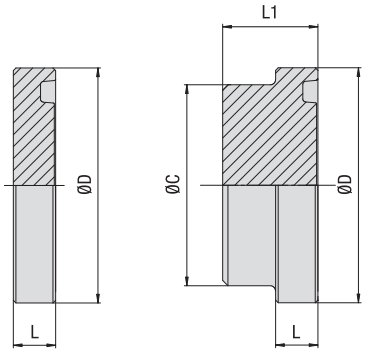

CAG-BP CAG-BPH

SAE Blindplug
Type CAG-BP (Standard) / CAG-BPH (High) ▪ 3000 / 6000 PSI Series



3000 PSI Standard Pressure Series (based on ISO 6162-1:2012)

Nominal Size		PN (bar/PSI)		Dimensions (mm/in)				Weight (kg/lbs) ca. per 100	Weight (kg/lbs) ca. per 100	Ordering Codes	Ordering Codes
DN	(in)	BP	BPH	ØC	ØD	L	L1	CAG-BP	CAG-BPH		
13	1/2	210	350	24	30,2	6,8	15	3,1	6,0	CAG-BP-301-W66	CAG-BPH-301-W66
		3045	5075	.94	1.19	.27	.59	6.82	13.20		
19	3/4	210	350	31,5	38,1	6,8	16	5,2	11,0	CAG-BP-302-W66	CAG-BPH-302-W66
		3045	5075	1.24	1.50	.27	.63	11.44	24.20		
25	1	210	345	38	44,45	8	18	8,9	17,9	CAG-BP-303-W66	CAG-BPH-303-W66
		3045	5003	1.50	1.75	.31	.71	19.58	39.38		
32	1-1/4	200	280	43	50,8	8	18	11,2	23,3	CAG-BP-304-W66	CAG-BPH-304-W66
		2900	4061	1.69	2.00	.31	.71	24.64	51.26		
38	1-1/2	160	210	50	60,35	8	18	16,2	32,2	CAG-BP-305-W66	CAG-BPH-305-W66
		2320	3045	1.97	2.38	.31	.71	35.64	70.84		
51	2	160	210	61,8	71,4	9,6	19	27,9	56,1	CAG-BP-306-W66	CAG-BPH-306-W66
		2320	3045	2.43	2.81	.38	.75	61.38	123.42		
64	2-1/2	100	175	73,8	84,1	9,6	40	39,2	78,0	CAG-BP-307-W66	CAG-BPH-307-W66
		1450	2538	2.91	3.31	.38	1.57	86.24	171.60		
76	3	100	160	90	101,6	9,6	45	57,8	235,2	CAG-BP-308-W66	CAG-BPH-308-W66
		1450	2320	3.54	4.00	.38	1.77	127.16	517.44		
89	3-1/2	35	35	102	114,3	11,3	30	86,2	303,1	CAG-BP-309-W66	CAG-BPH-309-W66
		508	508	4.02	4.50	.44	1.18	189.64	666.82		
102	4	35	35	114	127	11,3	36	107,4	458,8	CAG-BP-310-W66	CAG-BPH-310-W66
		508	508	4.49	5.00	.44	1.42	236.28	1009.28		

Please see Page 89 for separate Bolt Sets and Sealings.

6000 PSI High Pressure Series (based on ISO 6162-2:2012)

Nominal Size		PN (bar/PSI)		Dimensions (mm/in)				Weight (kg/lbs) ca. per 100	Weight (kg/lbs) ca. per 100	Ordering Codes	Ordering Codes
DN	(in)	BP	BPH	ØC	ØD	L	L1	CAG-BP	CAG-BPH		
13	1/2	250	350	24	31,8	7,8	14	4,0	8,4	CAG-BP-601-W66	CAG-BPH-601-W66
		3625	5075	.94	1.25	.31	.55	8.80	18.48		
19	3/4	250	350	32	41,3	8,8	15	8,6	16,3	CAG-BP-602-W66	CAG-BPH-602-W66
		3625	5075	1.26	1.63	.35	.59	18.92	35.86		
25	1	250	350	38	47,6	9,5	16	12,4	26,9	CAG-BP-603-W66	CAG-BPH-603-W66
		3625	5075	1.50	1.87	.37	.63	27.28	59.18		
32	1-1/4	250	350	43,8	54	10,3	16	17,7	42,2	CAG-BP-604-W66 [2]	CAG-BPH-604-W66 [2]
		3625	5075	1.72	2.13	.41	.63	38.94	92.84		
38	1-1/2	250	350	50,8	63,5	12,6	19	29,5	64,6	CAG-BP-605-W66	CAG-BPH-605-W66
		3625	5075	2.00	2.50	.50	.75	64.90	142.12		
51	2	250	350	66,5	79,4	12,6	30	47,1	129,4	CAG-BP-606-W66	CAG-BPH-606-W66
		3625	5075	2.62	3.13	.50	1.18	103.62	284.68		
64	2-1/2	250	350	89	108	21,2	45		265,6		CAG-BPH-607-W66
		3625	5075	3.50	4.25	.83	1.77		584.32		

Please see Page 89 for separate Bolt Sets and Sealings.

[2] According to ISO 6162-2 bolts M12 should be used but because usually bolts M14 are used the description of the complete part must show M14 (e.g. CAG-BP-604-M14-W130-K).

Materials / Ordering Options / Examples

* SAE Blindplug (without O-ring) made of Steel S355J2 / C45 or equivalent, zinc-plated and thick-film-passivated **CAG-BP-...-W66**
* SAE Blindplug (without O-ring) made of Stainless Steel V4A – 1.4404 (on request) **CAG-BP-...-W5**
* SAE Counterflange Blindplug made of Steel S355J2 / C45 or equivalent, zinc-plated and thick-film-passivated **CSG-BP-...-W66**

* Kit with DB including Metric bolts 10.9, spring rings, O-ring made of NBR (Buna-N®) **CAG-BP-...-W130-K**
* Kit with DB including Metric bolts 10.9, spring rings, O-ring made of FKM (Viton®) **CAG-BP-...-V-W130-K**
* Kit with DB including UNC bolts (Grade 8), spring rings, O-ring made of NBR (Buna-N®) **CAG-BP-...-U-W130-K**
* Kit with BM including Metric bolts 10.9, spring rings, O-ring made of NBR (Buna-N®) **CAG-BP-...-BM-W130-K**

SAE Sandwich Plate
Type SPL ▪ 3000 / 6000 PSI Series



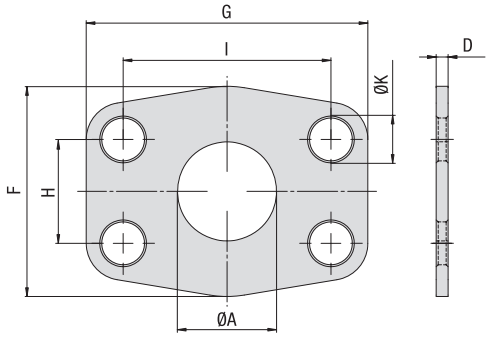

D

3000 PSI Standard Pressure Series (based on ISO 6162-1:2012)

Nominal Size		Dimensions (mm/in)							Weight (kg/lbs) ca.	Ordering Codes
DN	(in)	ØA	D	F	G	H	I	ØK	per 100	
13	1/2	13	3	47	57	17,5	38,1	9	4,1	SPL-301-W1
		.51	.12	1.85	2.24	.69	1.50	.35	9.02	
19	3/4	19	3	49	66	22,3	47,6	11	5,1	SPL-302-W1
		.75	.12	1.93	2.60	.88	1.87	.43	11.22	
25	1	25	3	53	71	26,2	52,4	11	5,7	SPL-303-W1
		.98	.12	2.09	2.80	1.03	2.06	.43	12.54	
32	1-1/4	32	3	69	80	30,2	58,7	11,5	8,2	SPL-304-W1
		1.26	.12	2.72	3.15	1.19	2.31	.45	18.04	
38	1-1/2	38	3	77	95	35,7	69,9	13,5	10,5	SPL-305-W1
		1.50	.12	3.03	3.74	1.41	2.75	.53	23.10	
51	2	51	3	89	103	42,9	77,8	13,5	12,3	SPL-306-W1
		2.01	.12	3.50	4.06	1.69	3.06	.53	27.06	
64	2-1/2	63	3	101	116	50,8	88,9	13,5	14,2	SPL-307-W1
		2.48	.12	3.98	4.57	2.00	3.50	.53	31.24	
76	3	73	4	124	136	61,9	106,4	17	27,3	SPL-308-W1
		2.87	.16	4.88	5.35	2.44	4.19	.67	60.06	
89	3-1/2	89	4	136	152	69,8	120,7	17	33,2	SPL-309-W1
		3.50	.16	5.35	5.98	2.75	4.75	.67	73.04	
102	4	99	4	146	162	77,8	130,2	17	36,5	SPL-310-W1
		3.90	.16	5.75	6.38	3.06	5.13	.67	80.30	
127	5	120	4	180	184	92	152,4	17	49,7	SPL-311-W1
		4.72	.16	7.09	7.24	3.62	6.00	.67	109.34	

6000 PSI High Pressure Series (based on ISO 6162-2:2012)

Nominal Size		Dimensions (mm/in)							Weight (kg/lbs) ca.	Ordering Codes
DN	(in)	ØA	D	F	G	H	I	ØK	per 100	
13	1/2	13	4	47	57	18,2	40,5	9	5,6	SPL-601-W1
		.51	.16	1.85	2.24	.72	1.59	.35	12.32	
19	3/4	17	4	53	71	23,8	50,8	11	8,0	SPL-602-W1
		.67	.16	2.09	2.80	.94	2.00	.43	17.60	
25	1	24	4	66	80	27,8	57,2	13	10,9	SPL-603-W1
		.94	.16	2.60	3.15	1.09	2.25	.51	23.98	
32	1-1/4	31	4	77	94	31,8	66,6	15	14,6	SPL-604-M14-W1
		1.22	.16	3.03	3.70	1.25	2.62	.59	32.12	
38	1-1/2	38	4	89	103	36,5	79,3	17	18,1	SPL-605-W1
		1.50	.16	3.50	4.06	1.44	3.12	.67	39.82	
51	2	51	4	116	135	44,5	96,8	21	29,3	SPL-606-W1
		2.01	.16	4.57	5.31	1.75	3.81	.83	64.46	
64	2-1/2	63	4	150	166	58,7	123,8	25	48,1	SPL-607-W1
		2.48	.16	5.91	6.54	2.31	4.87	.98	105.82	
76	3	73	4	178	208	71,4	152,4	32	71,5	SPL-608-W1
		2.87	.16	7.01	8.19	2.81	6.00	1.26	157.30	

Materials / Ordering Options / Examples

* SAE Sandwich Plate made of Steel ST35 or equivalent, blank (oiled) **SPL-...-W1**

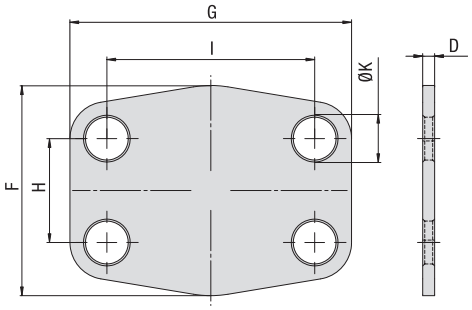

SAE Cover Plate
Type CPL ▪ 3000 / 6000 PSI Series



3000 PSI Standard Pressure Series (based on ISO 6162-1:2012)

Nominal Size		Dimensions (mm/in)						Weight (kg/lbs) ca.	Ordering Codes
DN	(in)	D	F	G	H	I	ØK	per 100	
13	1/2	3	47	57	17,5	38,1	9	4,3	CPL-301-W1
		.12	1.85	2.24	.69	1.50	.35	9.46	
19	3/4	3	49	66	22,3	47,6	11	5,7	CPL-302-W1
		.12	1.93	2.60	.88	1.87	.43	12.54	
25	1	3	53	71	26,2	52,4	11	6,9	CPL-303-W1
		.12	2.09	2.80	1.03	2.06	.43	15.18	
32	1-1/4	3	69	80	30,2	58,7	11,5	9,7	CPL-304-W1
		.12	2.72	3.15	1.19	2.31	.45	21.34	
38	1-1/2	3	77	95	35,7	69,9	13,5	12,8	CPL-305-W1
		.12	3.03	3.74	1.41	2.75	.53	28.16	
51	2	3	89	103	42,9	77,8	13,5	16,5	CPL-306-W1
		.12	3.50	4.06	1.69	3.06	.53	36.30	
64	2-1/2	3	101	116	50,8	88,9	13,5	22,3	CPL-307-W1
		.12	3.98	4.57	2.00	3.50	.53	49.06	
76	3	4	124	136	61,9	106,4	17	40,3	CPL-308-W1
		.16	4.88	5.35	2.44	4.19	.67	88.66	
89	3-1/2	4	136	152	69,8	120,7	17	53,3	CPL-309-W1
		.16	5.35	5.98	2.75	4.75	.67	117.26	
102	4	4	146	162	77,8	130,2	17	61,1	CPL-310-W1
		.16	5.75	6.38	3.06	5.13	.67	134.42	
127	5	4	180	184	92	152,4	17	85,5	CPL-311-W1
		.16	7.09	7.24	3.62	6.00	.67	188.10	

6000 PSI High Pressure Series (based on ISO 6162-2:2012)

Nominal Size		Dimensions (mm/in)						Weight (kg/lbs) ca.	Ordering Codes
DN	(in)	D	F	G	H	I	ØK	per 100	
13	1/2	4	47	57	18,2	40,5	9	6,0	CPL-601-W1
		.16	1.85	2.24	.72	1.59	.35	13.20	
19	3/4	4	53	71	23,8	50,8	11	9,0	CPL-602-W1
		.16	2.09	2.80	.94	2.00	.43	19.80	
25	1	4	66	80	27,8	57,2	13	12,8	CPL-603-W1
		.16	2.60	3.15	1.09	2.25	.51	28.16	
32	1-1/4	4	77	94	31,8	66,6	15	16,7	CPL-604-M14-W1
		.16	3.03	3.70	1.25	2.62	.59	36.74	
38	1-1/2	4	89	103	36,5	79,3	17	21,8	CPL-605-W1
		.16	3.50	4.06	1.44	3.12	.67	47.96	
51	2	4	116	135	44,5	96,8	21	36,6	CPL-606-W1
		.16	4.57	5.31	1.75	3.81	.83	80.52	
64	2-1/2	4	150	166	58,7	123,8	25	57,6	CPL-607-W1
		.16	5.91	6.54	2.31	4.87	.98	126.72	
76	3	4	178	208	71,4	152,4	32	85,6	CPL-608-W1
		.16	7.01	8.19	2.81	6.00	1.26	188.32	

Materials / Ordering Options / Examples

* SAE Cover Plate made of Steel ST35 or equivalent, blank (oiled) **CPL-...-W1**

SAE Reducing Flange
Type BFX-...-BAS-... ▪ 3000 / 6000 PSI Series



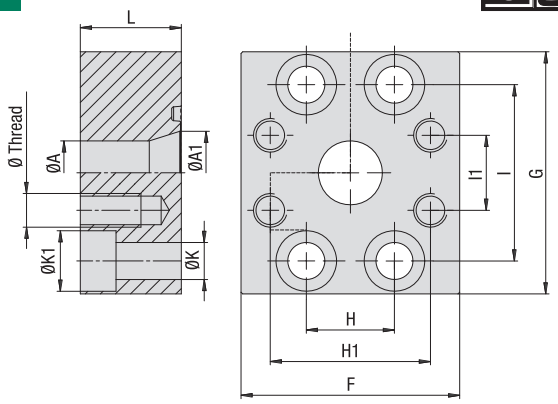

3000 PSI Standard Pressure Series (based on ISO 6162-1:2012)

Nominal Size		Dimensions (mm/in)											Weight (kg/lbs) ca.	for Bolts	Ø Thread	Ordering Codes
DN	(in)	ØA	ØA1	F	G	H	H1	I	I1	L	ØK	ØK1	per 100	Metric	Metric	
25	1	19	25	65	72	26,2	47,6	52,4	22,3	30	11	18	83,0	M10x30	M10	BFX-303-BAS-302-W1
		.75	.98	2.56	2.83	1.03	1.87	2.06	.88	1.18	.43	.71	182.60			
32	1-1/4	25	32	70	80	30,2	52,4	58,7	26,2	30	11	18	99,0	M10x30	M10	BFX-304-BAS-303-W1
		.98	1.26	2.76	3.15	1.19	2.06	2.31	1.03	1.18	.43	.71	217.80			
38	1-1/2	32	38	80	95	35,7	58,7	69,9	30,2	30	13,5	20	133,0	M12x35	M10	BFX-305-BAS-304-W1
		1.26	1.50	3.15	3.74	1.41	2.31	2.75	1.19	1.18	.53	.79	292.60			
51	2	32	51	95	100	42,9	58,7	77,8	30,2	30	13,5	20	165,6	M12x35	M10	BFX-306-BAS-304-W1
		1.26	2.01	3.74	3.94	1.69	2.31	3.06	1.19	1.18	.53	.79	364.32			
51	2	38	46	95	120	42,9	69,9	77,8	35,7	30	13,5	20	166,0	M12x35	M12	BFX-306-BAS-305-W1
		1.50	1.81	3.74	4.72	1.69	2.75	3.06	1.41	1.18	.53	.79	365.20			
64	2-1/2	38	62	109	114	50,8	69,9	88,9	35,7	35	13,5	20	257,0	M12x40	M12	BFX-307-BAS-305-W1
		1.50	2.44	4.29	4.49	2.00	2.75	3.50	1.41	1.38	.53	.79	565.40			
64	2-1/2	51	64	109	114	50,8	77,8	88,9	42,9	35	13,5	20	244,0	M12x40	M12	BFX-307-BAS-306-W1
		2.01	2.52	4.29	4.49	2.00	3.06	3.50	1.69	1.38	.53	.79	536.80			
76	3	51	76	114	140	61,9	77,8	106,4	42,9	40	17,5	26	367,4	M16x50	M12	BFX-308-BAS-306-W1
		2.01	2.99	4.49	5.51	2.44	3.06	4.19	1.69	1.57	.69	1.02	808.28			
76	3	64	76	114	140	61,9	88,9	106,4	50,8	40	17,5	26	367,0	M16x50	M12	BFX-308-BAS-307-W1
		2.52	2.99	4.49	5.51	2.44	3.50	4.19	2.00	1.57	.69	1.02	807.40			

Please see Page 89 for separate Bolt Sets and Sealings.

6000 PSI High Pressure Series (based on ISO 6162-2:2012)

Nominal Size		Dimensions (mm/in)											Weight (kg/lbs) ca.	for Bolts	Ø Thread	Ordering Codes
DN	(in)	ØA	ØA1	F	G	H	H1	I	I1	L	ØK	ØK1	per 100	Metric	Metric	
19	3/4	19	19	70	70	23,8	50,8	50,8	23,8	28	11	18	83,0	M10x35	M10	BFX-602-BAS-602-W1
		.75	.75	2.76	2.76	.94	2.00	2.00	.94	1.10	.43	.71	182.60			
25	1	19	23	70	81	27,8	50,8	57,2	23,8	30	13,5	20	100,9	M12x40	M10	BFX-603-BAS-602-W1
		.75	.91	2.76	3.19	1.09	2.00	2.25	.94	1.18	.53	.79	221.98			
25	1	25	25	75	80	27,8	57,2	57,2	27,8	36	13,5	20	125,0	M12x45	M12	BFX-603-BAS-603-W1
		.98	.98	2.95	3.15	1.09	2.25	2.25	1.09	1.42	.53	.79	275.00			
32	1-1/4	23	30	83	100	31,8	57,2	66,6	27,8	25	15	22	120,7	M14x40	M12	BFX-604-M14-BAS-603-W1
		.91	1.18	3.27	3.94	1.25	2.25	2.62	1.09	.98	.59	.87	265.54			
32	1-1/4	31	31	90	100	31,8	66,6	66,6	31,8	35	15	22	195,0	M14x50	M14	BFX-604-M14-BAS-604-M14-W1
		1.22	1.22	3.54	3.94	1.25	2.62	2.62	1.25	1.38	.59	.87	429.00			
38	1-1/2	32	40	95	113	36,5	66,6	79,3	31,8	48	17,5	26	236,2	M16x55	M14	BFX-605-BAS-604-M14-W1
		1.26	1.57	3.74	4.45	1.44	2.62	3.12	1.25	1.89	.69	1.02	519.64			
38	1-1/2	38	38	113	113	36,5	79,3	79,3	36,5	50	17,5	26	382,2	M16x55	M16	BFX-605-BAS-605-W1
		1.50	1.50	4.45	4.45	1.44	3.12	3.12	1.44	1.97	.69	1.02	840.84			
51	2	38	49	125	140	44,5	79,3	96,8	36,5	60	22	33	334,9	M20x100	M16	BFX-606-BAS-605-W1
		1.50	1.93	4.92	5.51	1.75	3.12	3.81	1.44	2.36	.87	1.30	736.78			

Please see Page 89 for separate Bolt Sets and Sealings.

Materials / Ordering Options / Examples

* SAE Reducing Flange (without O-ring) made of Steel S355J2 or equivalent, blank (oiled) **BFX-...-BAS-...-W1**
* SAE Reducing Flange (without O-ring) made of Stainless Steel V4A – 1.4404 (on request) **BFX-...-BAS-...-W5**

Separate Bolt Sets and Sealings

Please see Page 89 for separate Bolt Sets and Sealings.

Bolt Sets

Ordering of bolt sets (consisting of 4 hexagon socket head cap bolts and 4 spring rings) by using the ordering codes as stated below:

Metric bolts (property class 10.9)	**KIT-BFX-IS-M12x50-ISO4762-10.9-W1**	(Steel, blank and oiled)
UNC bolts (Grade 8)	**KIT-BFX-IS-U5/16-18X1-1/4-AB18.3-GR8-W1**	(Steel, blank and oiled)

Thread diameters, dimensions (see corresponding catalogue pages) and property classes / grades have to be chosen to meet your specific requirements.
Replace material code W66 / W1 with W5 for bolts made of Stainless Steel V4A – 1.4571.

Metric bolts	ISO 4762	Spring rings for Metric bolts	DIN 7980
UNC bolts	ANSI B 18.3	Spring rings for UNC bolts	ANSI B 18.21.1

O Rings

3000 PSI Standard Pressure Series (according to ISO 6162-1)

Nominal Size DN	(in)	Internal Diameter x Cross-Section SAE J515 (STAUFF Standard)	Nominal Size ISO 3601-1
13	1/2	18.64 x 3.53	-210
19	3/4	24.99 x 3.53	-214
25	1	32.92 x 3.53	-219
32	1-1/4	37.69 x 3.53	-222
38	1-1/2	47.22 x 3.53	-225
51	2	56.74 x 3.53	-228
64	2-1/2	69.44 x 3.53	-232
76	3	85.32 x 3.53	-237
89	3-1/2	98.02 x 3.53	-241
102	4	110.72 x 3.53	-245
127	5	136.12 x 3.53	-253

6000 PSI High Pressure Series (according to ISO 6162-2)

Nominal Size DN	(in)	Internal Diameter x Cross-Section SAE J515 (STAUFF Standard)	Nominal Size ISO 3601-1
13	1/2	18.64 x 3.53	-210
19	3/4	24.99 x 3.53	-214
25	1	32.92 x 3.53	-219
32	1-1/4	37.69 x 3.53	-222
38	1-1/2	47.22 x 3.53	-225
51	2	56.74 x 3.53	-228
64	2-1/2	69.44 x 3.53	-232
76	3	85.32 x 3.53	-237

Ordering Codes

***O-RING-*18.64X*3.53-*B90**

* O-Ring		**O-RING**
* Internal Diameter (in mm)		**18.64**
* Cross-Section (in mm)		**3.53**
* Seal Material	NBR (Buna-N®) Hardness: 90 Shore Temperature Range: -30 °C ... +100 °C / -22 °F ... + 212 °F	**-B90**
	FKM (Viton®) Hardness: 85 ... 90 Shore Temperature Range: -20 °C ... +200 °C / -4 °F ... +392 °F	**-V90**

Please contact STAUFF for alternative materials.