DP1603

Relay adapter

Relais Adapter/2xNO

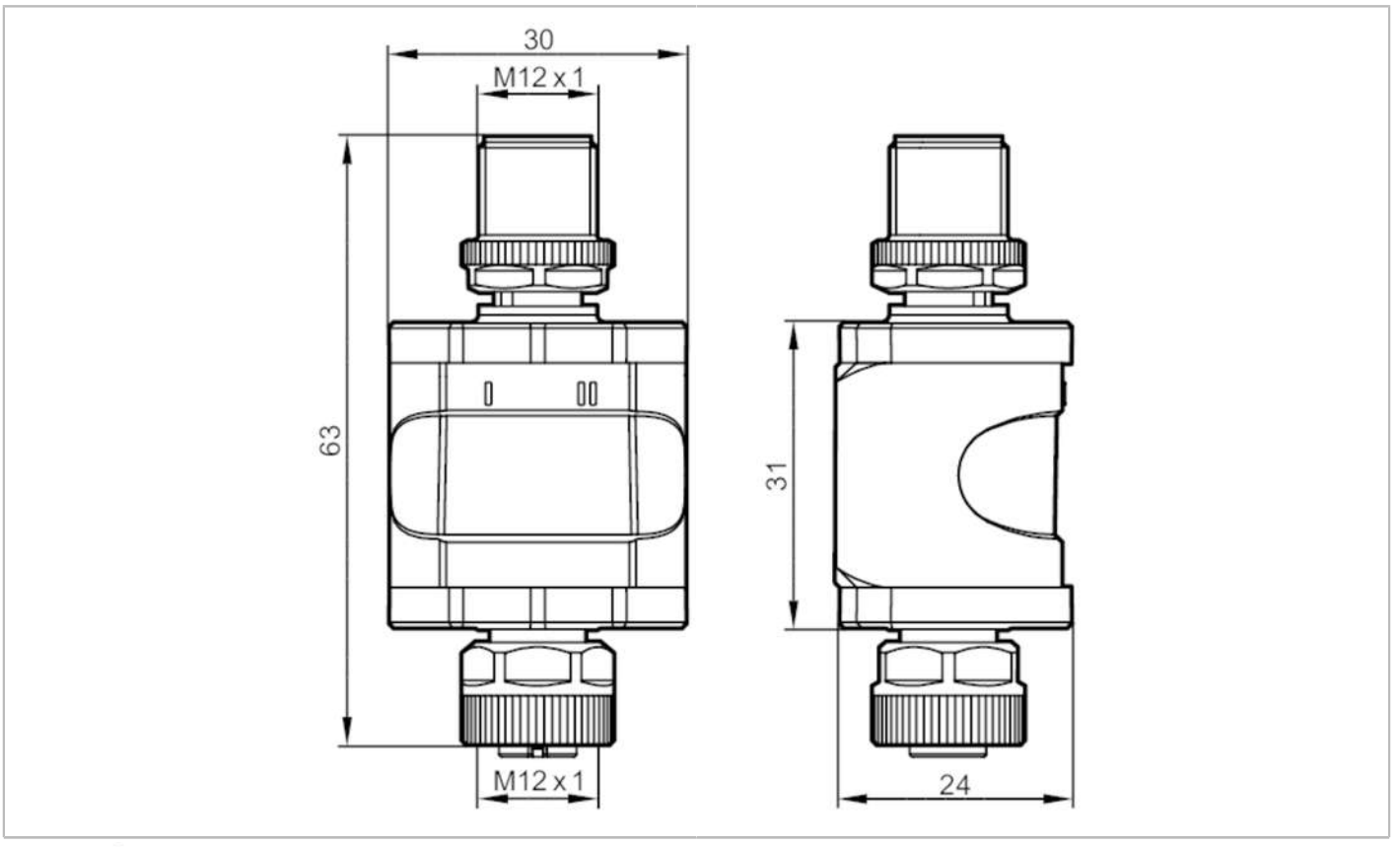

Product characteristics		
Output function		normally open
Dimensions	[mm]	63 x 30 x 24
Electrical data		
Operating voltage	[V]	18...30 DC; ((in wet environments: 18...28 V) ; to SELV/PELV)
Nominal voltage DC	[V]	24
Current consumption	[mA]	< 10
Inputs / outputs		
Number of inputs and outputs		Number of digital inputs: 2; Number of relay outputs: 2
Inputs		
Number of digital inputs		2; (type 3 (IEC 61131-2))
Input circuit of digital inputs		PNP
Outputs		
Voltage range DC	[V]	0...32; (to SELV/PELV)
Voltage range AC	[V]	0...20; ((in wet environments: 0...16 V); to SELV/PELV)
Output function		normally open
Max. current load per output	[mA]	1000
Number of relay outputs		2
Switching frequency AC	[Hz]	1
Switching frequency DC	[Hz]	1
Notes on switching frequency	[Hz]	no capacitive loads

DP1603

Relay adapter

Relais Adapter/2xNO

Operating conditions		
Ambient temperature	[°C]	-25...60
Note on ambient temperature		2000 m: -25...60 °C
		3000 m: -25...55 °C
		4000 m: -25...52 °C
Storage temperature	[°C]	-25...70
Max. relative air humidity	[%]	90; (linearly decreasing to 50 % (40 °C) non condensing)
Max. height above sea level	[m]	4000
Protection		IP 67
Pollution degree		2; (before installation and when the device is replaced)
Tests / approvals		
MTTF	[years]	942
Mechanical data		
Weight	[g]	82.2
Weight (without accessories and packaging)	[g]	35
Dimensions	[mm]	63 x 30 x 24
Materials		housing: PA
Accessories		
Accessories (optional)		mounting clip
Remarks		
Remarks		For further information please see the operating instructions.
Pack quantity		1 pcs.

Electrical connection - plug

Connector: 1 x M12, straight; coding: A



1: L+	
2: IN1	DI1
3: L-	
4: IN2	DI2

DP1603

Relay adapter

Relais Adapter/2xNO

Electrical connection - socket

Connector: 1 x M12, straight; coding: A

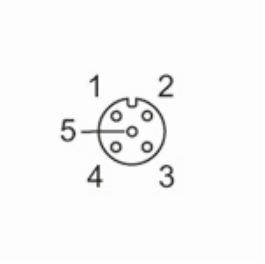

1: L1 / L+	supply voltage Output
2: OUT1	NO1
3: n.c.	
4: OUT2	NO2
5: n.c.	