7205 BECBP

Popular item
SKF Explorer

Dimensions

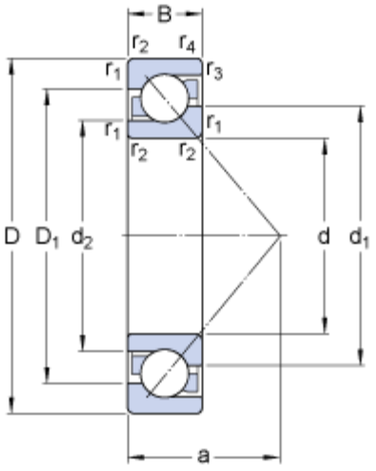

d		25	mm
D		52	mm
B		15	mm
d_1	≈	36.1	mm
d_2	≈	30.87	mm
D_1	≈	41.5	mm
a		24	mm
$r_{1,2}$	min.	1	mm
$r_{3,4}$	min.	0.6	mm

Abutment dimensions

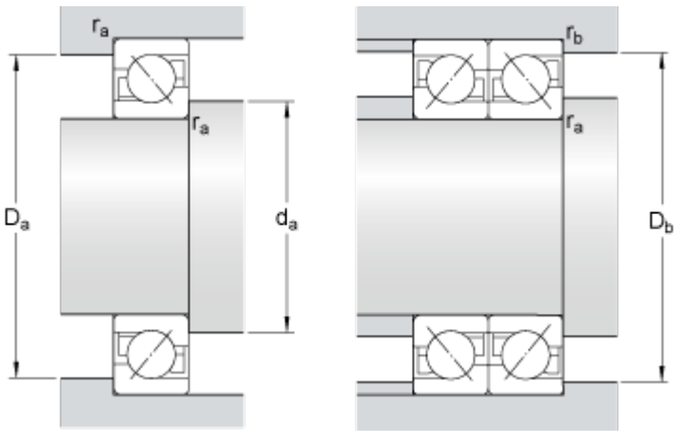

d_a	min.	30.6	mm
D_a	max.	46.4	mm
D_b	max.	47.8	mm
r_a	max.	1	mm
r_b	max.	0.6	mm

Calculation data

Basic dynamic load rating	C	15.6	kN
Basic static load rating	C_0	10	kN
Fatigue load limit	P_u	0.43	kN
Reference speed		16000	r/min
Limiting speed		17000	r/min
Calculation factor	A	0.00159	
Calculation factor	k_r	0.095	
Calculation factor	e	1.14	

Single bearing or bearing pair arranged in tandem

Calculation factor	X	0.35	

Calculation factor	Y_0	0.26
Calculation factor	Y_2	0.57

Bearing pair arranged back-to-back or face-to-face

Calculation factor	X	0.57
Calculation factor	Y_0	0.52
Calculation factor	Y_1	0.55
Calculation factor	Y_2	0.93

Mass

Mass bearing	0.13	kg