R15
Industrial Electromagnetic Relays



- Contacts AgNi
- For plug-in sockets, 35 mm rail mount or on panel mounting.
- Cadmium-free contacts-R15 DPDT, R15 3PDT, R15 4PDT relays
- WT (mechanical indicator and lockable front test button) - standard features of R15 DPDT, R15 3DPT relays in cover, for plug-in sockets.
- Relays may be provided with the test buttons (no latching) and plugs (see page 115).
- AUCOTEAM, GmbH Berlin - railway standards.

E105728

Contact Data

Number and type of contacts	DPDT	3PDT	4PDT
Contact material	AgNi	AgNi	AgCdO
Rated / max. switching voltage AC	250 V / 440 V	250 V / 440 V	250 V / 440 V
Min. switching voltage	10 V	10 V	10 V
Rated load (capacity) AC1	10 A / 250 V AC; 10 A / 277 V AC UL 508	10 A / 250 V AC; 10 A / 277 V AC UL 508	10 A / 250 V AC; 10 A / 277 V AC UL 508
AC15	3 A / 120 V; 1.5 A / 240 V (B300)	3 A / 120 V; 1.5 A / 240 V (B300)	3 A / 120 V; 1.5 A / 240 V (B300)
AC3	370 W (single-phase motor. 1/2 HP / 240 V AC UL 508)	370 W (single-phase motor. 1/2 HP / 240 V AC UL 508)	370 W (single-phase motor. 1/2 HP / 240 V AC UL 508)
DC1	10 A / 24 V DC (see Fig. 3)	10 A / 24 V DC (see Fig. 3)	10 A / 24 V DC (see Fig. 3)
DC13	0.22 A / 120 V; 0.1 A / 250 V (R300)	0.22 A / 120 V; 0.1 A / 250 V (R300)	0.22 A / 120 V; 0.1 A / 250 V (R300)
Min. switching current	5 mA	5 mA	10 mA
Max. inrush current	20 A	20 A	20 A
Rated current	**10A**	**10A**	**10A**
Max. breaking capacity AC1	2500 VA	2500 VA	2500 VA
Min. breaking capacity	0.3 W	0.3 W	0.5 W
Contact resistance	≤ 100 mΩ	≤ 100 mΩ	≤ 100 mΩ
Max. operating frequency			
• at rated load AC1	1200 cycles/hour	1200 cycles/hour	1200 cycles/hour
• no load	12000 cycles/hour	12000 cycles/hour	12000 cycles/hour
Coil Data			
Rated voltage 50/60 Hz AC	6 ... 240 V	6 ... 240 V	6 ... 240 V
DC	6 ... 220 V	6 ... 220 V	6 ... 220 V
Must release voltage	AC: ≥ 0.15 U_n; DC: ≥ 0.1 U_n	AC: ≥ 0.15 U_n; DC: ≥ 0.1 U_n	AC: ≥ 0.15 U_n; DC: ≥ 0.1 U_v
Operating range of supply voltage	see page 68	see page 68	see page 68
Rated power consumption	AC: 2.8 VA 50 Hz; 2.5 VA 60 Hz; DC: 1.5 W	AC: 2.8 VA 50 Hz; 2.5 VA 60 Hz; DC: 1.5 W	AC: 2.8 VA 50 Hz; 2.5 VA 60 Hz; DC: 1.5 W
Insulation			
Insulation rated voltage	250 V AC	250 V AC	250 V AC
Rated surge voltage	2500 V 1.2 / 50 µs	2500 V 1.2 / 50 µs	2500 V 1.2 / 50 µs
Overvoltage category	III	III	III
Insulation pollution degree	3	3	3
Dielectric strength			
• between coil and contacts	2500 V AC type of insulation: basic	2500 V AC type of insulation: basic	2500 V AC type of insulation: basic
• contact clearance	1500 V AC type of clearance: micro-disco.	1500 V AC type of clearance: micro-disco.	1500 V AC type of clearance: micro-disco.
• pole - pole	2000 V AC type of insulation: basic	2000 V AC type of insulation: basic	2000 V AC type of insulation: basic
Contact - coil distance			
• clearance	≥ 3 mm	≥ 3 mm	≥ 3 mm
• creepage	≥ 4.2 mm	≥ 4.2 mm	≥ 3.2 mm
General Data			
Operating / release time (typical)	AC: 12 ms / 10 ms; DC: 18 ms / 7 ms	AC: 12 ms / 10 ms; DC: 18 ms / 7 ms	AC: 12 ms / 10 ms; DC: 18 ms / 7 ms
Electrical life			
• resistive AC1	> 2 x 10^5; 10 A. 250 V AC	> 2 x 10^5; 10 A. 250 V AC	> 2 x 10^5; 10 A. 250 V AC
• cos	see Fig. 2	see Fig. 2	see Fig. 2
Mechanical life (cycles)	> 2 x 10^7	> 2 x 10^7	> 2 x 10^7
Dimensions (L x W x H)	35 x 35 x 54.4 mm	35 x 35 x 54.4 mm	35 x 42.5 x 54.5 mm
Weight	83 g	83 g	95 g
Ambient temperature			
• storage	-40...+85 °C	-40...+85 °C	-40...+85 °C
• operating	AC: -40...+55 °C DC: -40...+70 °C	AC: -40...+55 °C DC: -40...+70 °C	AC: -40...+55 °C DC: -40...+70 °C
Cover protection category	IP 40 PN-EN 60529	IP 40 PN-EN 60529	IP 40 PN-EN 60529
Environmental protection	RTI PN-EN 116000-3	RTI PN-EN 116000-3	RTI PN-EN 116000-3
Shock resistance	10 g	10 g	10 g
Vibration resistance	5 g 10...150 Hz	5 g 10...150 Hz	5 g 10...150 Hz
Solder bath temperature	max. 270 °C	max. 270 °C	max. 270 °C
Soldering time	max. 5 s	max. 5 s	max. 5 s

DATA SUBJECT TO CHANGE WITHOUT NOTICE

DPDT

CONNECTION DIAGRAM

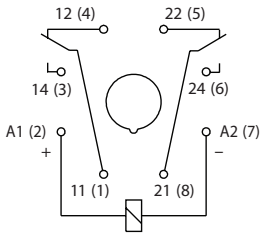

DIMENSIONS

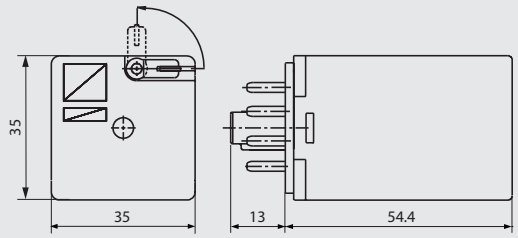

3PDT

CONNECTION DIAGRAM

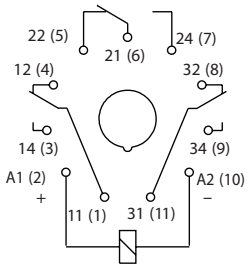

DIMENSIONS

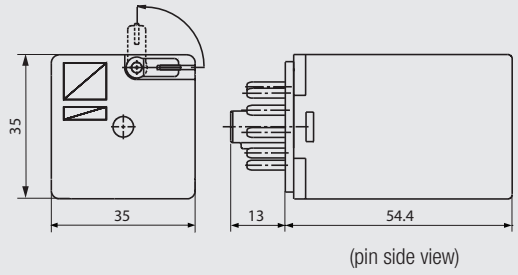

4PDT

CONNECTION DIAGRAM

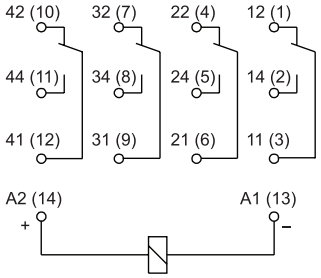

DIMENSIONS

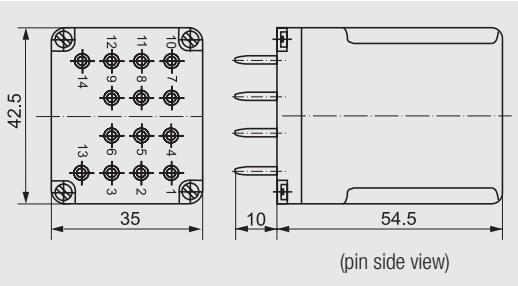

LOAD CHARTS

Electrical life at AC resistive load.
Switching frequency: 1200 cycles/hour — Fig. 1

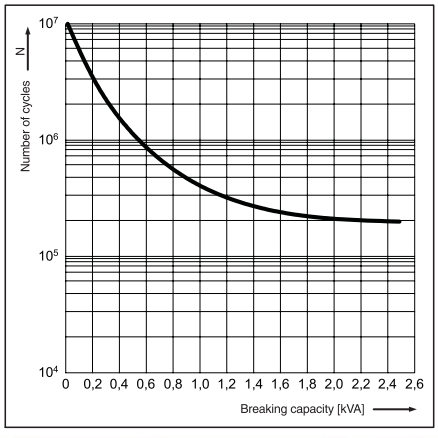

Electrical life reduction factor at AC inductive load — Fig. 2

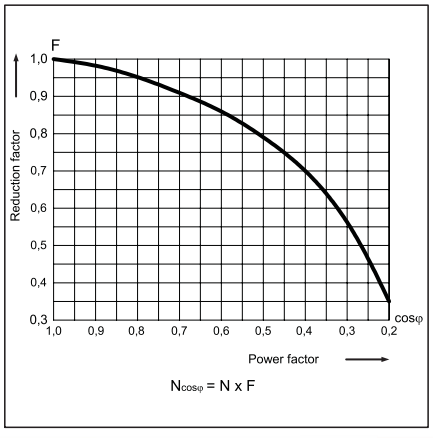

Max. DC breaking capacity
A - resistive load DC1
B - inductive load L/R = 40 ms — Fig. 3

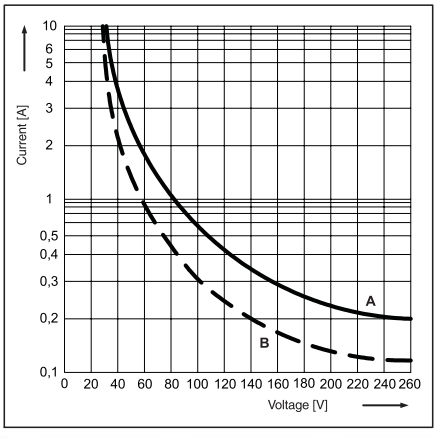

DATA SUBJECT TO CHANGE WITHOUT NOTICE

R15
Industrial Electromagnetic Relays

R15 DPDT AC 50/60Hz & DC coil

Part Number	Coil Voltage (V)	Coil Type	Coil resistance at 20 °C in Ω	Coil operating range min. (at 20°C)	Coil operating range max. (at 55°C)	Options* –	Options* WT	Options* WTL
► **R15-2012-23-1012**	12	DC	110	9.6	13.2	x		
R15-2012-23-1012-WT	12	DC	110	9.6	13.2		x	
R15-2012-23-1012-WTL	12	DC	110	9.6	13.2			x
► **R15-2012-23-1024**	24	DC	430	19.2	26.4	x		
R15-2012-23-1024-WT	24	DC	430	19.2	26.4		x	
► **R15-2012-23-1024-WTL**	24	DC	430	19.2	26.4			x
R15-2012-23-1110	110	DC	9200	88.0	121.0	x		
R15-2012-23-1110-WT	110	DC	9200	88.0	121.0		x	
R15-2012-23-1110-WTL	110	DC	9200	88.0	121.0			x
► **R15-2012-23-5024**	24	AC 50/60Hz	75	19.2	26.4	x		
R15-2012-23-5024-WT	24	AC 50/60Hz	75	19.2	26.4		x	
R15-2012-23-5024-WTL	24	AC 50/60Hz	75	19.2	26.4			x
► **R15-2012-23-5120**	120	AC 50/60Hz	1910	96.0	132.0	x		
R15-2012-23-5120-WT	120	AC 50/60Hz	1910	96.0	132.0		x	
► **R15-2012-23-5120-WTL**	120	AC 50/60Hz	1910	96.0	132.0			x
► **R15-2012-23-5230**	230	AC 50/60Hz	7080	184.0	253.0	x		
R15-2012-23-5230-WT	230	AC 50/60Hz	7080	184.0	253.0		x	
R15-2012-23-5230-WTL	230	AC 50/60Hz	7080	184.0	253.0			x

R15 3PDT AC 50/60Hz & DC coil

Part Number	Coil Voltage (V)	Coil Type	Coil resistance at 20 °C in Ω	Coil operating range min. (at 20°C)	Coil operating range max. (at 55°C)	Options* –	Options* WT	Options* WTL
► **R15-2013-23-1012**	12	DC	110	9.6	13.2	x		
R15-2013-23-1012-WT	12	DC	110	9.6	13.2		x	
R15-2013-23-1012-WTL	12	DC	110	9.6	13.2			x
► **R15-2013-23-1024**	24	DC	430	19.2	26.4	x		
R15-2013-23-1024-WT	24	DC	430	19.2	26.4		x	
► **R15-2013-23-1024-WTL**	24	DC	430	19.2	26.4			x
R15-2013-23-1110	110	DC	9200	88.0	121.0	x		
R15-2013-23-1110-WT	110	DC	9200	88.0	121.0		x	
R15-2013-23-1110-WTL	110	DC	9200	88.0	121.0			x
► **R15-2013-23-5024**	24	AC 50/60Hz	75	19.2	26.4	x		
R15-2013-23-5024-WT	24	AC 50/60Hz	75	19.2	26.4		x	
R15-2013-23-5024-WTL	24	AC 50/60Hz	75	19.2	26.4			x
► **R15-2013-23-5120**	120	AC 50/60Hz	1910	96.0	132.0	x		
R15-2013-23-5120-WT	120	AC 50/60Hz	1910	96.0	132.0		x	
► **R15-2013-23-5120-WTL**	120	AC 50/60Hz	1910	96.0	132.0			x
► **R15-2013-23-5230**	230	AC 50/60Hz	7080	184.0	253.0	x		
R15-2013-23-5230-WT	230	AC 50/60Hz	7080	184.0	253.0		x	
R15-2013-23-5230-WTL	230	AC 50/60Hz	7080	184.0	253.0			x

R15 4PDT AC 50/60Hz & DC coil

Part Number	Coil Voltage (V)	Coil Type	Coil resistance at 20 °C in Ω	Coil operating range min. (at 20°C)	Coil operating range max. (at 55°C)	Options* -	Options* K	Options* WT	Options* WTL
R15-1014-23-1012	12	DC	110	9.6	13.2	x			
R15-1014-23-1012-K	12	DC	110	9.6	13.2		x		
R15-1014-23-1012-L	12	DC	110	9.6	13.2			x	
R15-1014-23-1012-D	12	DC	110	9.6	13.2				x
R15-1014-23-1024	24	DC	430	19.2	26.4	x			
R15-1014-23-1024-K	24	DC	430	19.2	26.4		x		
► **R15-1014-23-1024-L**	24	DC	430	19.2	26.4			x	
R15-1014-23-1024-D	24	DC	430	19.2	26.4				x
R15-1014-23-1110	110	DC	9200	88.0	121.0	x			
R15-1014-23-1110-K	110	DC	9200	88.0	121.0		x		
R15-1014-23-1110-L	110	DC	9200	88.0	121.0			x	
R15-1014-23-1110-D	110	DC	9200	88.0	121.0				x
R15-1014-23-3024	24	AC 50Hz	72	19.2	26.4	x			
R15-1014-23-3024-K	24	AC 50Hz	72	19.2	26.4		x		
R15-1014-23-3024-L	24	AC 50Hz	72	19.2	26.4			x	
R15-1014-23-3024-D	24	AC 50Hz	72	19.2	26.4				x
R15-1014-23-3120	120	AC 50Hz	2300	96.0	132.0	x			
R15-1014-23-3120-K	120	AC 50Hz	2300	96.0	132.0		x		
R15-1014-23-3120-L	120	AC 50Hz	2300	96.0	132.0			x	
R15-1014-23-3120-D	120	AC 50Hz	2300	96.0	132.0				x
R15-1014-23-3230	230	AC 50Hz	7900	184.0	253.0	x			
R15-1014-23-3230-K	230	AC 50Hz	7900	184.0	253.0		x		
R15-1014-23-3230-L	230	AC 50Hz	7900	184.0	253.0			x	
R15-1014-23-3230-D	230	AC 50Hz	7900	184.0	253.0				x
R15-1014-23-6120	120	AC 60Hz	2000	96.0	132.0	x			
R15-1014-23-6120-K	120	AC 60Hz	2000	96.0	132.0		x		
► **R15-1014-23-6120-L**	120	AC 60Hz	2000	96.0	132.0			x	
R15-1014-23-6120-D	120	AC 60Hz	2000	96.0	132.0				x
R15-1014-23-6230	230	AC 60Hz	7000	184.0	253.0	x			
R15-1014-23-6230-K	230	AC 60Hz	7000	184.0	253.0		x		
R15-1014-23-6230-L	230	AC 60Hz	7000	184.0	253.0			x	
R15-1014-23-6230-D	230	AC 60Hz	7000	184.0	253.0				x

WT = with mechanical indicator + lockable front test button; **WTL** = with mechanical indicator + lockable front test button + light indicator (LED)
K = with test button without block function; **L** = with light indicator (LED); **D** = with surge suppression element (diode); other options available upon request

► **BOLD - Regular stocked items.**

DATA SUBJECT TO CHANGE WITHOUT NOTICE

GZP8 for R15 DPDT

Screw terminals
Max. tightening moment
for the terminal: 0.5 Nm
35 mm rail mount
acc. to PN-EN 60715
or on panel mounting
73 x 38.2 x 27.2 mm Two poles
12 A, 300 V AC



GZP8

CONNECTION DIAGRAM

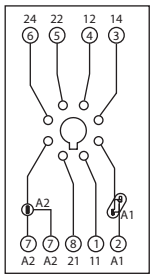

DIMENSIONS

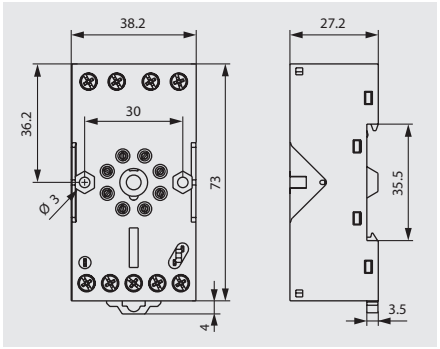

E22891



Time module COM3T



GZP-0035



GZP-0054

PZ8 for R15 DPDT

Screw terminals
Max. tightening moment
for the terminal: : 0.7 Nm
35 mm rail mount
acc. to PN-EN 60715
or on panel mounting
68.2 x 38 x 24.2 mm
Two poles
10 A, 250 V AC

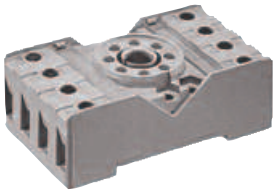

PZ8

CONNECTION DIAGRAM

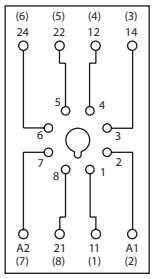

DIMENSIONS

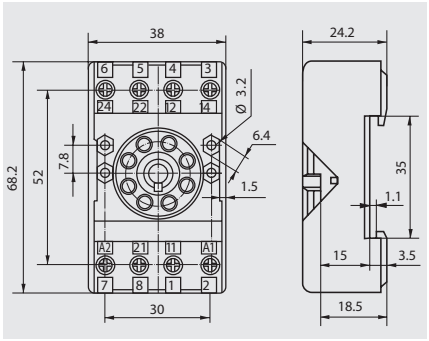

E105728



PZ11 0031

GZP11 for R15 3PDT

Screw terminals
Max. tightening moment
for the terminal: : 0,5 Nm
35 mm rail mount
acc. to PN-EN 60715
or on panel mounting
73 x 38.2 x 27.2 mm
Three poles
12 A, 300 V AC

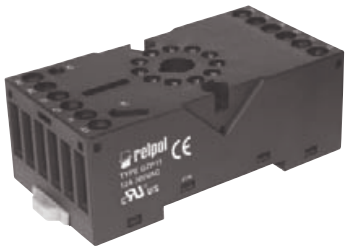

GZP11

CONNECTION DIAGRAM

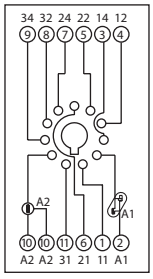

DIMENSIONS

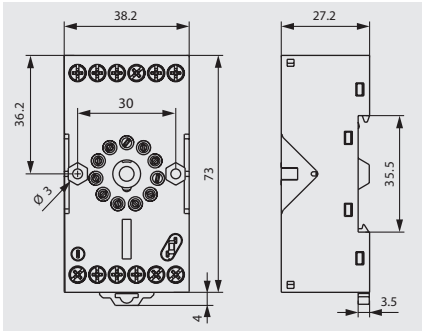

E22891



Time module COM3T



GZP-0035



GZP-0054

All accessories are sold separately.

DATA SUBJECT TO CHANGE WITHOUT NOTICE

PZ11 for R15 3PDT

Screw terminals
Max. tightening moment
for the terminal: : 0.7 Nm
35 mm rail mount
acc. to PN-EN 60715
or on panel mounting
68.2 x 38 x 24.2 mm
Three poles
10 A, 250 V AC

E105728

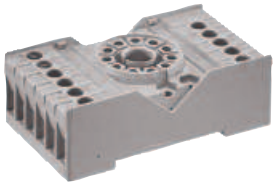

PZ11



PZ11 0031

CONNECTION DIAGRAM

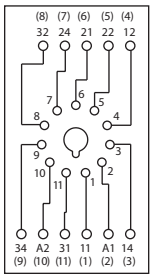

DIMENSIONS

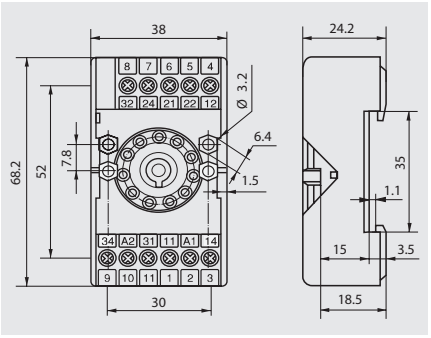

GZ14U for R15 4PDT

Screw terminals
Max. tightening moment
for the terminal: : 0.7 Nm
35 mm rail mount
acc. to PN-EN 60715
96.8 x 46.2 x 33.3 mm
Four poles
10 A, 250 V AC

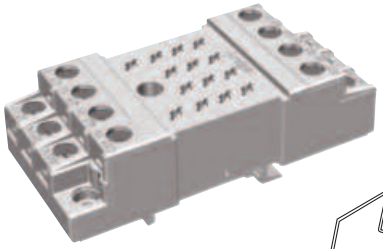

GZ14ZU



GZ14 0737

CONNECTION DIAGRAM

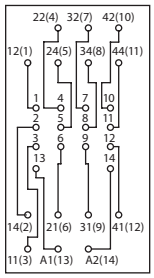

DIMENSIONS

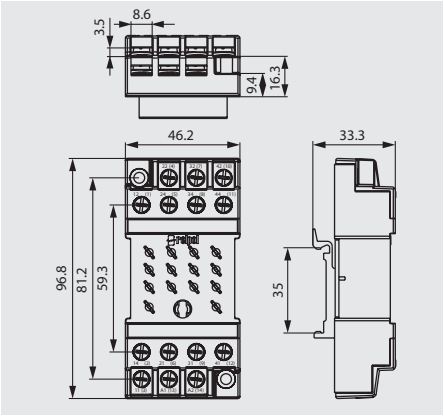

See Relay Socket Combinations on pages 104-109







All accessories are sold separately.

DATA SUBJECT TO CHANGE WITHOUT NOTICE

Altech Custom Assemblies

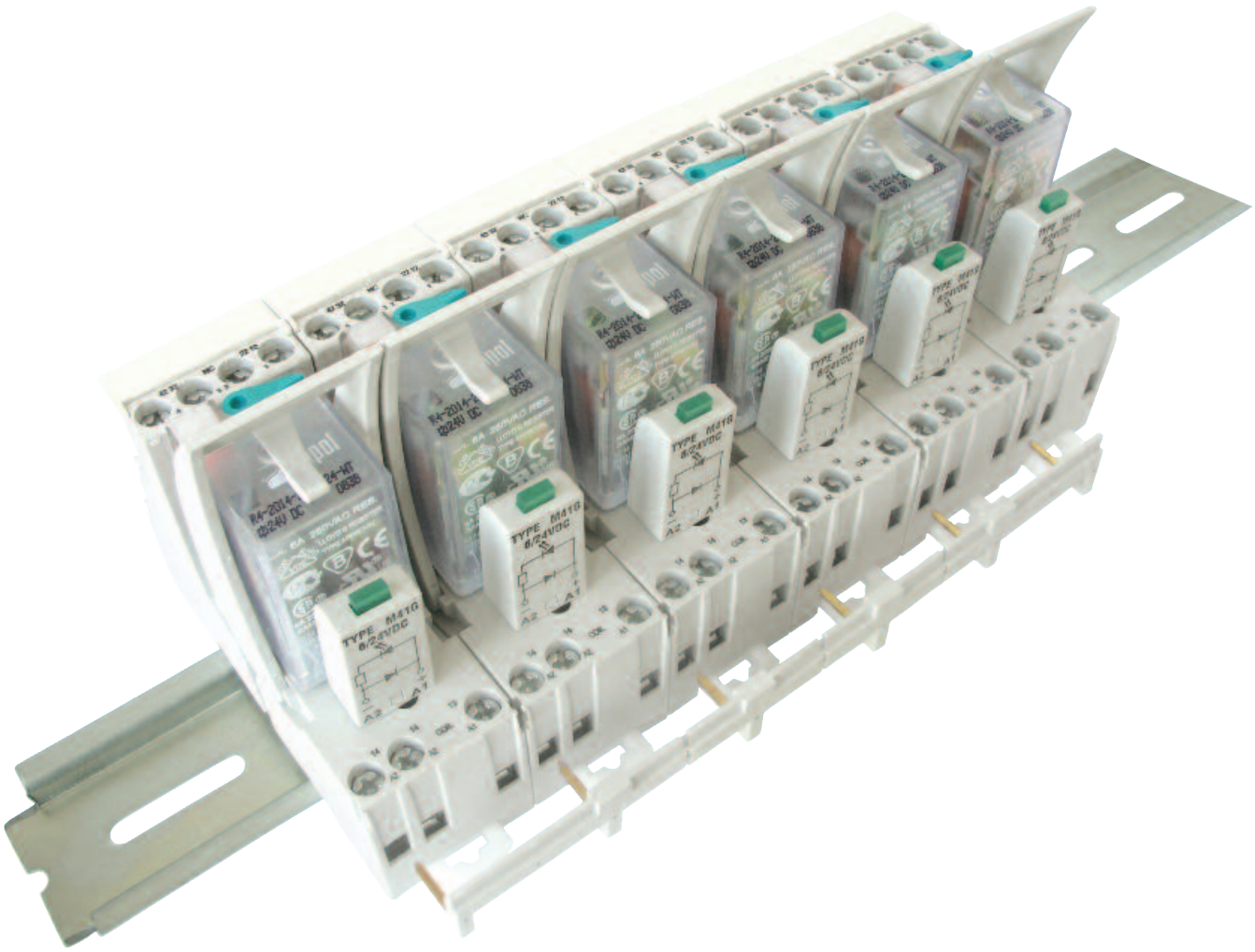

Altech provides quick turnaround and competitive prices on assemblies.

For complete assemblies contact Altech.

DATA SUBJECT TO CHANGE WITHOUT NOTICE