ADP-SMAF-SMAFIP-PNL

SMA(female) to SMA(female) Waterproof Panel

Features	
Frequency Range	DC-6GHz
Voltage Standing Wave Ratio	≤1.35
Impedance	50Ω
Temperature Range	-55~+155°C
Centre Conductor Retention Range	≥0.28N
Coupling nut Retention Force	≥180Nq
Durability (mating)	>500 Cycles
Working Voltage	355Vrms
Max Voltage (can withstand)	1000Vrms



Material Information	
Body	Gold plated Brass
Pin	Gold plated Brass
Insulator	PTFE

Ordering Information

Part Number	Description
ADP-SMAF-SMAFIP-PNL	SMA (male) to SMA (male) Panel Mount

Mechanical Detail

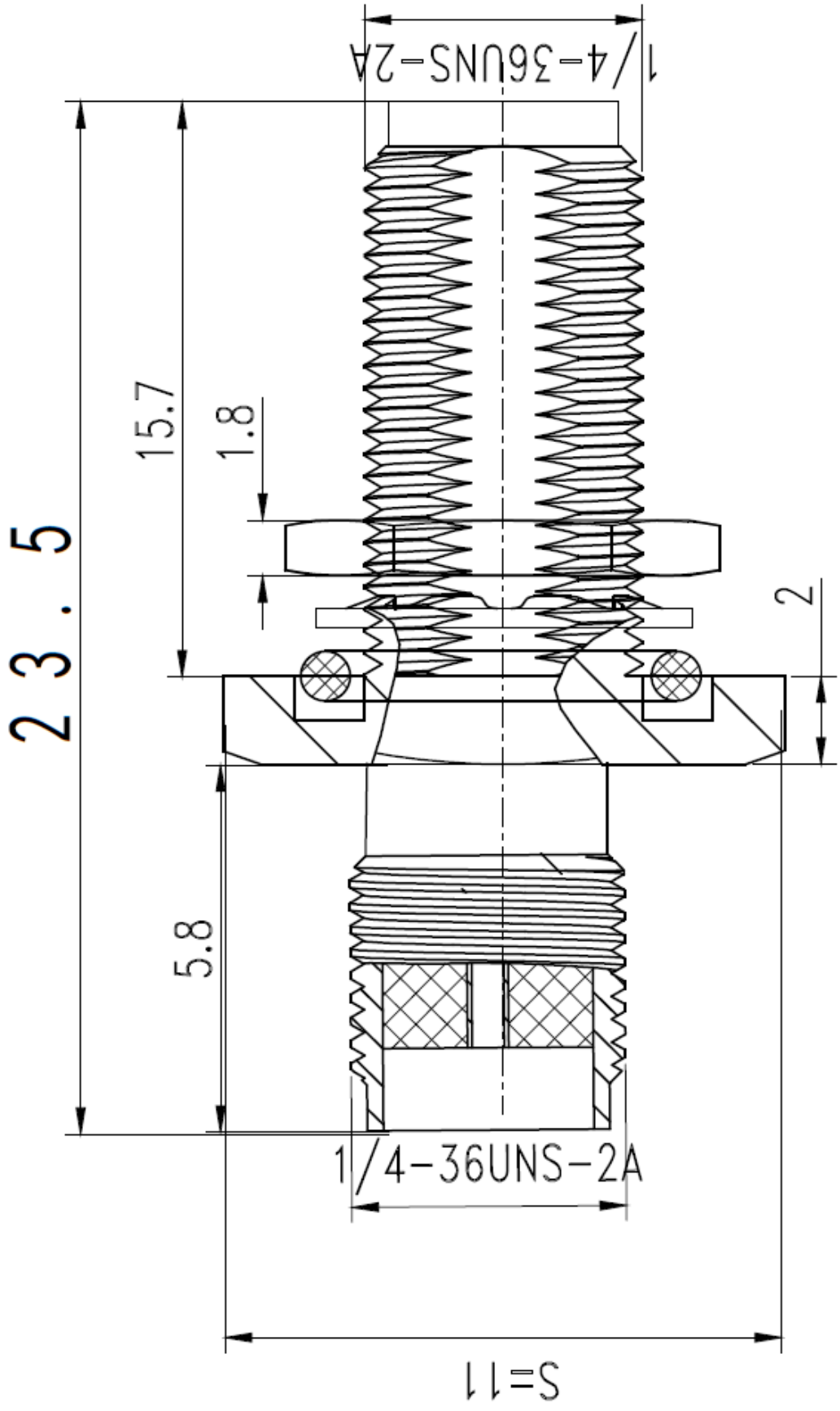

RF Adaptor

Simplified Declaration of Conformity (RED)

BG - С настоящото RF Solutions Limited декларира, че този тип радиосъоръжение дефинирани в този документ е в съответствие с Директива 2014/53/ЕС. Цялостният текст на ЕС декларацията за съответствие може да се намери на следния интернет адрес: www.rfsolutions.co.uk

CS -Tímto RF Solutions Limited prohlašuje, že typ rádiového zařízení definované v tomto dokumentu je v souladu se směrnicí 2014/53/EU. Úplné znění EU prohlášení o shodě je k dispozici na této internetové adrese: www.rfsolutions.co.uk

DA - Hermed erklærer RF Solutions Limited , at radioudstyrstypen defineret i dette dokument er i overensstemmelse med direktiv 2014/53/EU. EU-overensstemmelseserklæringens fulde tekst kan findes på følgende internetadresse: www.rfsolutions.co.uk

DE - Hiermit erklärt RF Solutions Limited , dass der Funkanlagentyp in diesem Dokument definiert der Richtlinie 2014/53/EU entspricht. Der vollständige Text der EU-Konformitätserklärung ist unter der folgenden Internetadresse verfügbar: www.rfsolutions.co.uk

EL - Με την παρούσα ο/η RF Solutions Limited , δηλώνει ότι ο ραδιοεξοπλισμός ορίζεται σε αυτό το έγγραφο πληροί την οδηγία 2014/53/ΕΕ. Το πλήρες κείμενο της δήλωσης συμμόρφωσης ΕΕ διατίθεται στην ακόλουθη ιστοσελίδα στο διαδίκτυο: www.rfsolutions.co.uk

EN - Hereby, RF Solutions Limited declares that the radio equipment type defined within this document is in compliance with Directive 2014/53/EU. The full text of the EU declaration of conformity is available at the following internet address: www.rfsolutions.co.uk

ES - Por la presente, RF Solutions Limited declara que el tipo de equipo radioeléctrico definido dentro de este documento es conforme con la Directiva 2014/53/UE. El texto completo de la declaración UE de conformidad está disponible en la dirección Internet siguiente: www.rfsolutions.co.uk

ET -Käesolevaga deklareerib RF Solutions Limited , et käesolev raadioseadme tüüp määratletud selles dokumendis vastab direktiivi 2014/53/EL nõuetele. ELi vastavusdeklaratsiooni täielik tekst on kättesaadav järgmisel internetiaadressil: www.rfsolutions.co.uk

FI -RF Solutions Limited vakuuttaa, että radiolaitetyyppi määratletud selles dokumendis on direktiivin 2014/53/EU mukainen. EU-vaatimustenmukaisuusvakuutuksen täysimittainen teksti on saatavilla seuraavassa internetosoitteessa: www.rfsolutions.co.uk

FR - Le soussigné, RF Solutions Limited , déclare que l'équipement radioélectrique du type défini dans ce document est conforme à la directive 2014/53/UE. Le texte complet de la déclaration UE de conformité est disponible à l'adresse internet suivante: www.rfsolutions.co.uk

HR - RF Solutions Limited ovime izjavljuje da je radijska oprema tipa definirani u ovom dokumentu u skladu s Direktivom 2014/53/EU. Cjeloviti tekst EU izjave o sukladnosti dostupan je na sljedećoj internetskoj adresi: www.rfsolutions.co.uk

HU - RF Solutions Limited igazolja, hogy a dokumentumban meghatározottak szerint típusú rádióberendezés megfelel a 2014/53/EU irányelvnek. Az EU-megfelelőségi nyilatkozat teljes szövege elérhető a következő internetes címen: www.rfsolutions.co.uk

IT - Il fabbricante, RF Solutions Limited , dichiara che il tipo di apparecchiatura radio definito all'interno di questo documento è conforme alla direttiva 2014/53/UE. Il testo completo della dichiarazione di conformità UE è disponibile al seguente indirizzo Internet: www.rfsolutions.co.uk

LT - Aš, RF Solutions Limited , patvirtinu, kad radijo įrenginių tipas apibrėžta šiame dokumente atitinka Direktyvą 2014/53/ES. Visas ES atitikties deklaracijos tekstas prieinamas šiuo interneto adresu: www.rfsolutions.co.uk

LV - Ar šo RF Solutions Limited deklarē, ka radioiekārta kas definēts šajā dokumentā atbilst Direktīvai 2014/53/ES. Pilns ES atbilstības deklarācijas teksts ir pieejams šādā interneta vietnē: www.rfsolutions.co.uk

MT - B'dan, RF Solutions Limited , niddikjara li dan it-tip ta' tagħmir tar-radju definit f'dan id-dokument huwa konformi mad-Direttiva 2014/53/UE. It-test kollu tad-dikjarazzjoni ta' konformità tal-UE huwa disponibbli f'dan l-indirizz tal-Internet li ġej: www.rfsolutions.co.uk

NL - Hierbij verklaar ik, RF Solutions Limited , dat het type radioapparatuur gedefinieerd in dit document conform is met Richtlijn 2014/53/EU. De volledige tekst van de EU-conformiteitsverklaring kan worden geraadpleegd op het volgende internetadres: www.rfsolutions.co.uk

PL - RF Solutions Limited niniejszym oświadcza, że typ urządzenia radiowego zdefiniowane w tym dokumencie jest zgodny z dyrektywą 2014/53/UE. Pełny tekst deklaracji zgodności UE jest dostępny pod następującym adresem internetowym: www.rfsolutions.co.uk

PT - O(a) abaixo assinado(a) RF Solutions Limited declara que o presente tipo de equipamento de rádio definido neste documento está em conformidade com a Diretiva 2014/53/UE. O texto integral da declaração de conformidade está disponível no seguinte endereço de Internet: www.rfsolutions.co.uk

RO - Prin prezenta, RF Solutions Limited declară că tipul de echipamente radio definit în acest document este în conformitate cu Directiva 2014/53/UE. Textul integral al declarației UE de conformitate este disponibil la următoarea adresă internet: www.rfsolutions.co.uk

SK - RF Solutions Limited týmto vyhlasuje, že rádiové zariadenie typu definované v tomto dokumente je v súlade so smernicou 2014/53/EÚ. Úplné EÚ vyhlásenie o zhode je k dispozícii na tejto internetovej adrese: www.rfsolutions.co.uk

SL - RF Solutions Limited potrjuje, da je tip radijske opreme opredeljeno v tem dokumentu skladen z Direktivo 2014/53/EU. Celotno besedilo izjave EU o skladnosti je na voljo na naslednjem spletnem naslovu: www.rfsolutions.co.uk

SV - Härmed försäkrar RF Solutions Limited att denna typ av radioutrustning definieras i detta dokument överensstämmer med direktiv 2014/53/EU. Den fullständiga texten till EU-försäkran om överensstämmelse finns på följande webbadress: www.rfsolutions.co.uk

RF Solutions Ltd. Recycling Notice
Meets the following EC Directives:
DO NOT
Discard with normal waste, please recycle.
ROHS Directive 2011/65/EU and amendment 2015/863/EU
Specifies certain limits for hazardous substances.
WEEE Directive 2012/19/EU
Waste electrical & electronic equipment. This product must be disposed of through a licensed WEEE collection point. RF Solutions Ltd., fulfils its WEEE obligations by membership of an approved compliance scheme, environment agency registration number **WEE/JB0104WV.**

Disclaimer:
Whilst the information in this document is believed to be correct at the time of issue, RF Solutions Ltd does not accept any liability whatsoever for its accuracy, adequacy or completeness. No express or implied warranty or representation is given relating to the information contained in this document. RF Solutions Ltd reserves the right to make changes and improvements to the product(s) described herein without notice. Buyers and other users should determine for themselves the suitability of any such information or products for their own particular requirements or specification(s). RF Solutions Ltd shall not be liable for any loss or damage caused as a result of user's own determination of how to deploy or use R F Solutions Ltd's products. Use of RF Solutions Ltd products or components in life support and/or safety applications is not authorised except with express written approval. No licences are created, implicitly or otherwise, under any of RF Solutions Ltd's intellectual property rights. Liability for loss or damage resulting or caused by reliance on the information contained herein or from the use of the product (including liability resulting from negligence or where RF Solutions Ltd was aware of the possibility of such loss or damage arising) is excluded. This will not operate to limit or restrict QuasarUK Ltd's liability for death or personal injury resulting from its negligence.