X20CM0985-02

1 General information

The module combines a power measurement module with special features in a compact footprint together with a synchronizing unit that meets all requirements.

The measurement unit is 3 current inputs are suitable for both X: 1 A and X: 5 A current transformers. Overcurrent resistance and the high resolution of the unit of measurement round off its features. For the voltage inputs, the value range can also be configured between 480 VAC and 120 VAC without any loss in converter resolution.

The area of application includes 4-wire AC power systems with a line-to-line voltage up to 480 VAC and 3-wire systems, where L2 can be grounded (V circuit). In addition, the module masters the measuring principle of the Aron circuit.

The resulting measured values range from the pure phase current and line-to-line or phase voltage to active, reactive and apparent power components, mains frequency, power factor and much more. In addition, peak values and energy meters are stored on the module in nonvolatile memory. Depending on the configuration, it is also possible to use a digital output as a pulse encoder for an external energy meter.

The synchronization unit does not just take the phasing and phase voltage into consideration; integrated intelligence also monitors the rate of change and other parameters, allowing them to influence when the synchronization output is switched. It is also possible to monitor a generator using a large number of additional conditions. A total of 4 voltage inputs provide substantial overall flexibility.

Monitoring functions expand the features of the module. Dependent overcurrent monitoring is included, which utilizes the thermal capacity of the motor/generator to allow short overloads while still providing full protection. The dependent, delayed imbalanced load monitoring used to protect three-phase generator and three-phase networks from imbalanced load can be adapted to the characteristics of different generator types using parameters while taking their special thermal time constants into account.

- Energy measurement for 120 to 480 VAC
- Simultaneous measurement of 2 AC power systems plus 2 additional voltages
- For multifunction measurement tasks
- Intelligent power system synchronization unit
- Current values of generator voltage and current
- Monitor functions per current power system guidelines

2 Order data

Order number	Short description	Figure
	Other functions	
X20CM0985-02	X20 digital and analog mixed module, multi-measurement transducer / synchronization module, 5 digital outputs, 24 VDC, 0.5 A, source, 1 relay, 1 A, 8 analog inputs, ±480 V / 120 V, 16-bit converter resolution, 3 analog inputs, 5 A / 1 A AC, 16-bit converter resolution, additional software functionalities, adapted to VDE guidelines (2018), order terminal blocks 0TB3102-7011, 0TB3104-7011, 0TB3102-7012, 0TB3104-7012 and 2x X20TB12 separately!	
	Required accessories	
	Terminal blocks	
0TB3102-7011	Accessory terminal block, 2-pin, A keyed, screw clamp terminal block 6 mm²	
0TB3102-7012	Accessory terminal block, 2-pin, B keyed, screw clamp terminal block 6 mm²	
0TB3104-7011	Accessory terminal block, 4-pin, A keyed, screw clamp terminal block 6 mm²	
0TB3104-7012	Accessory terminal block, 4-pin, B keyed, screw clamp terminal block 6 mm²	
X20TB12	X20 terminal block, 12-pin, 24 VDC keyed	

Table 1: X20CM0985-02 - Order data

3 Technical data

Order number	X20CM0985-02
Short description	
I/O module	X20 energy measurement and synchronization module
General information	
B&R ID code	0xF425
Status indicators	Channel status, operating state, module status
Diagnostics	
Module run/error	Yes, using LED status indicator and software
Analog inputs	Yes, using LED status indicator (measurement range of analog inputs)
Digital outputs	Yes, using LED status indicator and software
Overvoltage category	II [1]
Measurable frequency	
Measurement range	15.2 Hz to 2x nominal frequency [2]
Accuracy	Typ. 10 mHz at 400 V / 50 Hz and sinusoidal signals
Power consumption	
Bus	1.05 W
Internal I/O	4 W
Additional power dissipation caused by actuators (resistive) [W]	-
Certifications	
CE	Yes
UL	cULus E115267 Industrial control equipment
Digital outputs	
Quantity	5
Variant	Current-sourcing FET
Nominal voltage	24 VDC
Switching voltage	24 VDC -15% / +20%
Nominal output current	0.1 A
Total nominal current	0.5 A
Connection type	1-wire connections
Output circuit	Source
Output protection	Thermal shutdown in the event of overcurrent or short circuit
Diagnostic status	Output monitoring with 10 ms delay
Leakage current when the output is switched off	5 µA
Residual voltage	<0.3 V at 0.1 A nominal current
Peak short-circuit current	<2 A
Switch-on in the event of overload shutdown or short-circuit shutdown	Approx. 10 ms, depends on the module temperature
Switching delay	
0 → 1	<300 µs
1 → 0	<300 µs
Switching frequency	
Resistive load	Max. 100 Hz
Insulation voltage between channel and bus	500 V_{eff}

Table 2: X20CM0985-02 - Technical data

Order number	X20CM0985-02
Relay outputs	
Quantity	1
Variant	Relay / Changeover contact
Nominal voltage	30 VDC / 240 VAC
Rated frequency	DC / 45 to 63 Hz
Switching capacity	
Min.	10 mA / 5 VDC
Max.	30 W / 240 VAC
Nominal output current	1 A at 30 VDC / 1 A at 240 VAC
Actuator power supply	External
Switching voltage	Max. 60 VDC / 250 VAC
Switching delay	
0 → 1	≤10 ms
1 → 0	≤10 ms
Service life [3]	
Mechanical	Min. 10 x 10^6 ops.
Electrical	Min. 60 x 10^3 ops. (NC) at 1 A Min. 30 x 10^3 ops. (NO) at 1 A
Contact resistance	Max. 100 mΩ
Protective circuit	
Internal	None
External	None
DC	Inverse diode, RC combination or VDR
AC	RC combination or VDR
Insulation voltage	
Channel - Channel	1000 VAC / 1 min
Channel - Bus	4000 VAC / 1 min
Analog input voltage	
Channels	8
Input	120 VAC / 480 VAC
Input type	Single-ended
Digital converter resolution	±15-bit
Conversion time	
50 Hz	10 ms
60 Hz	8.33 ms
Instantaneous values	Corresponds to the X2X cycle time
Permissible input signal	Max. 132 VAC / 528 VAC
Output format [4]	
±120 VAC	1 LSB = 0x0001 = 5.707 mV
±480 VAC	1 LSB = 0x0001 = 22.787 mV
Output of digital value during overload	
Overshoot	0x7FFF
Undershoot	0x8001
Conversion method	SAR
Input filter	
Cutoff frequency	10 kHz
Slope	60 dB
Maximum gain drift [5]	0.02% per °C
Maximum offset drift [6]	0.003% per °C
Crosstalk between channels	-70 dB
Nonlinearity [6]	≤0.5% at 45 to 65 Hz
Protection against electrical shock	Protective impedance per EN 61131-2
Test voltage between channel and bus (type test)	3700 V_{eff}
Output format	INT
Input impedance in signal range	Approx. 3 MΩ
Max. error at 25°C	
Gain	0.09% [5]
Offset	0.03% [6]
Input protection	Overvoltage protection
Analog input current	
Channels	3
Input	1 A / 5 A AC
Input type	Isolated current transformer according to the compensation principle with a magnetic sensor, for connecting an external transformer
Digital converter resolution	±15-bit
Conversion time	
50 Hz	10 ms
60 Hz	8.33 ms
Instantaneous values	Corresponds to the X2X cycle time
Permissible input signal	Max. 1.5 A / 7.7 A
Output format [4]	
±1 A	1 LSB = 0x0001 = 189.903 µA
±5 A	1 LSB = 0x0001 = 949.513 µA

Table 2: X20CM0985-02 - Technical data

Order number	X20CM0985-02
Output of digital value during overload	
Overshoot	0x7FFF
Undershoot	0x8001
Conversion method	SAR
Input filter	
Cutoff frequency	10 kHz
Slope	60 dB
Maximum gain drift [5]	0.07% per °C
Maximum offset drift	Measurement range 2 A: 0.0064% per °C, measurement range 10 A: 0.00384% per °C
Crosstalk between channels	-70 dB
Nonlinearity [7]	≤0.5% at 45 to 65 Hz
Insulation voltage between channel and bus	500 V_{eff}
Output format	INT
Max. error at 25°C	
Gain	0.2% [5]
Offset	0.05% [7]
Thermal overcurrent [8]	15 x I_{Nom} for 0.2 s [9]
Monitored overcurrent	4 x I_{Nom} [9]
Input impedance [10]	
Measurement range 1 A	Max. 30 mΩ
Measurement range 5 A	Max. 10 mΩ
Electrical properties	
Electrical isolation	Bus isolated from I/O power supply and digital inputs and outputs Digital inputs and outputs isolated from each other
Operating conditions	
Mounting orientation	
Horizontal	Yes
Vertical	Yes
Installation elevation above sea level	
0 to 2000 m	No limitation
>2000 m	Reduction of ambient temperature by 0.5°C per 100 m
Degree of protection per EN 60529	IP20
Ambient conditions	
Temperature	
Operation	
Horizontal mounting orientation	-25 to 60°C
Vertical mounting orientation	-25 to 50°C
Derating	See section "Derating".
Storage	-40 to 85°C
Transport	-40 to 85°C
Relative humidity	
Operation	5 to 95%, non-condensing
Storage	5 to 95%, non-condensing
Transport	5 to 95%, non-condensing
Mechanical properties	
Note	Order 2x terminal block X20TB12 separately. Order 2x screw clamp terminal block TB3102 and 2x screw clamp terminal block TB3104 separately.
Pitch	$87.5^{+0.2}$ mm

Table 2: X20CM0985-02 - Technical data

1) EN 61131-2
2) Rated frequency: 48 to 62 Hz. Synchronization is only possible at the nominal frequency.
3) See section "Electrical service life".
4) INT, range of values: 0x8001 to 0x7FFF
5) Based on the current measured value
6) Based on the measurement range 240 VAC / 960 VAC
7) Based on the measurement range 2 A / 10 A
8) This can result in the measurement hysteresis being offset in relation to the overcurrent.
9) Based on the measurement range 1 A / 5 A
10) Including current transformer, circuit path and X20TB12 terminal block (5 mΩ)

4 Safety guidelines

General information

Programmable logic controllers, operating/monitoring devices (e.g. industrial PCs, Power Panels, Mobile Panels, etc.) as well as uninterruptible power supplies have all been designed, developed and manufactured by B&R for conventional use or for use with increased safety requirements (safety technology) in industry. They were not designed, developed and manufactured for any use involving serious risks or hazards that could lead to death, injury, serious physical damage or loss of any kind without the implementation of exceptionally stringent safety precautions. In particular, such risks and hazards include the use of these devices to monitor nuclear reactions in nuclear power plants, their use in flight control or flight safety systems as well as in the control of mass transportation systems, medical life support systems or weapons systems.

When using programmable logic controllers or operating/monitoring devices as control systems together with a Soft PLC (e.g. B&R Automation Runtime or comparable product) or Slot PLC (e.g. B&R LS251 comparable product), safety precautions relevant to industrial control systems (e.g. the provision of safety devices such as emergency stop circuits, etc.) must be observed in accordance with applicable national and international regulations. The same applies for all other devices connected to the system, e.g. drives.

All tasks such as the installation, commissioning and servicing of devices are only permitted to be carried out by qualified personnel. Qualified personnel are those familiar with the transport, mounting, installation, commissioning and operation of devices who also have the appropriate qualifications (e.g. IEC 60364-1). National accident prevention regulations must be observed.

The safety notices, connection descriptions (type plate and documentation) and limit values listed in the technical data are to be read carefully before installation and commissioning and must be observed.

Intended use

Danger!

Electronic devices are never completely failsafe. If the multi-measurement and synchronization unit fails, the user is responsible for making sure that the motor or generator is brought to a secure state.

Some errors are detected and prevented in the synchronization unit by the system's internal software monitoring. However, when the device is in operation it is always possible for errors, defective components, software errors or configuration mistakes to occur at any time. B&R emphasizes that the multi-measurement and synchronization unit possesses neither a failsafe function nor a redundancy system. For this reason, independent higher-level safety precautions need to be put in place to ensure that personnel and machines are protected.

Grounding the Mounting Rail

For grounding purposes, a good conductive connection between the mounting rail and the metal back wall is required. The mounting rail is to be connected conductively to the back wall. This is achieved by inserting a contact washer with the fastening screw.

Information:

The control cabinet back wall must be connected with GND

5 LED status indicators

For a description of the various operating modes, see section "Additional information - Diagnostic LEDs" in the X20 system user's manual.

LED status indicators - Left

Figure	LED	Color	Status	Description
	r	Green	Off	No power to module
			Single flash	Mode RESET
			Double flash	Mode BOOT (during firmware update)[1)]
			Blinking	Mode PREOPERATIONAL
			On	Mode RUN
	e	Red	Off	Module not supplied with power or everything OK
			On	Error or reset state
	e + r	Solid red / Single green flash		Invalid firmware
	1 - 6	Orange		Output state of the corresponding digital output

1) Depending on the configuration, a firmware update can take up to several minutes.

LED status indicators - Right

Figure	LED[1)]	Terminal	Color	Status	Description
	1	X3	Green	On	Measurement range: 120 VAC
			Red	On	Measurement range: 480 VAC
	2	X4	Green	On	Measurement range: 120 VAC
			Red	On	Measurement range: 480 VAC
	3	X5	Green	On	Measurement range: 120 VAC
			Red	On	Measurement range: 480 VAC
	4	X6	Green	On	Measurement range: 120 VAC
			Red	On	Measurement range: 480 VAC
	5	X2	Green	On	Measurement range: 1 A
			Red	On	Measurement range: 5 A

1) LEDs 1 - 5 are green/red dual LEDs.

6 Connection elements

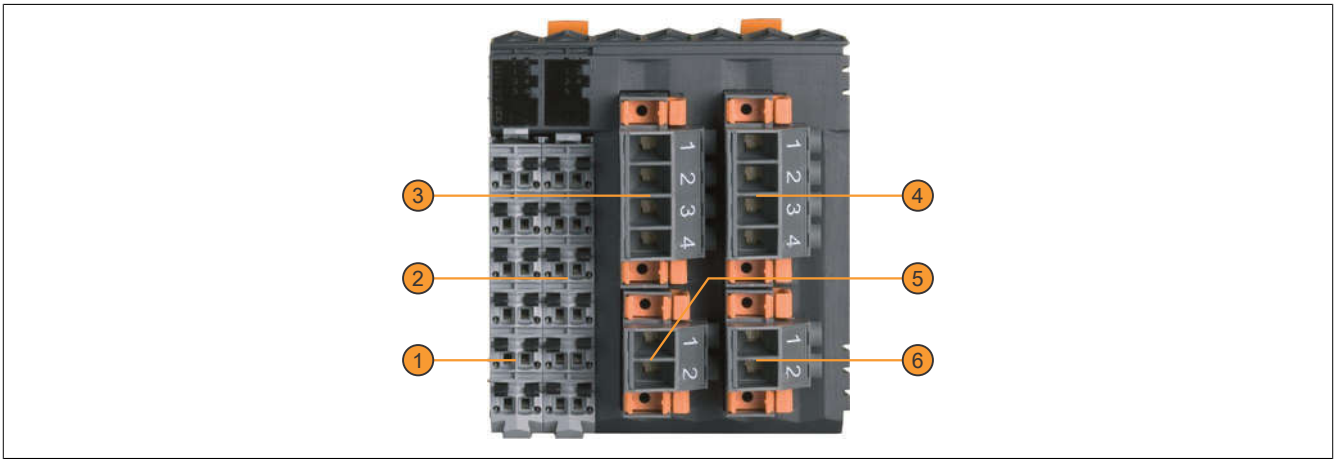

1	Digital outputs X1	2	Analog current inputs X2 (generator network)
3	Analog voltage inputs X3 (generator network)	4	Analog voltage inputs X5 (busbar)
5	Analog voltage inputs X4 (synchronization network 1)	6	Analog voltage inputs X6 (synchronization network 2)

7 Digital outputs X1

Terminals X1 and X2 can be keyed differently to prevent unintentional incorrect connection on the module.

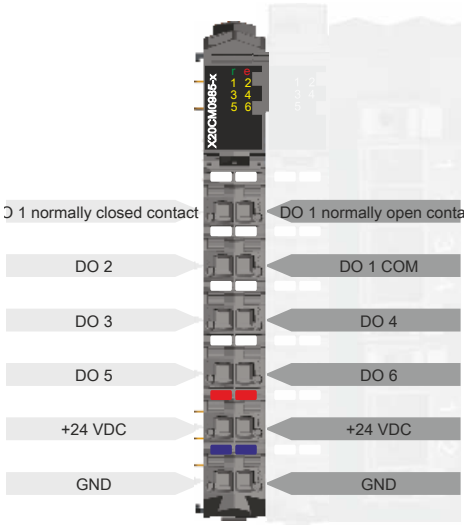

Function description of the digital outputs

Digital output	Description
DO1	This output is designed as a changeover contact switch and serves either as a digital output or monitoring relay (see register "ConfigOutput24" on page 32) for monitoring the following measured values of the generator mains: • Overvoltage and undervoltage • Overfrequency and underfrequency • Voltage asymmetry • Current asymmetry • Calculated neutral conductor current (maximum) • Short circuit current • Dependent overcurrent • Limit value of the capacitive reactive power (exciter failure) • Generator overload • Generator feedback • Inductive reactive power reference (Q-U protection)
DO2	DO2 serves as a meter output. The generated pulses can be recorded by an external energy meter (kWh).
DO3	This output is set when there is no voltage on the bus bar (below the lower limit of the defined parameter). 3-phase monitoring takes place for the bus bar voltage.
DO4	DO4 serves as a synchronization pulse. The power switch is activated by setting this output. The output is deactivated after the configured time has elapsed (**exception:**Synchro check operating mode).
DO5	This output is configurable as a digital output or monitoring output (see register "ConfigOutput24" on page 32). The monitoring function is only available with the "3-phase network" network configuration. When configured as a monitoring output, the following measured quantities of the network can be monitored: • Overvoltage and undervoltage • Overfrequency and underfrequency • Voltage asymmetry • Phase shift • Frequency change The monitoring status can be output either normally or inverted. The corresponding configuration takes place with register "DigitalOutput" on page 69. This setting is disabled again during switch off, reset, warm restart, cold restart, etc.
DO6	Can be configured as a digital output or synchronization output (see register "ConfigOutput24" on page 32). When configured as a synchronization output: DO6 serves as the synchronization pulse. The power switch is activated by setting this output. The output is deactivated after the configured time has elapsed (**exception:**Synchro check operating mode).

DO1 - Output circuit diagram

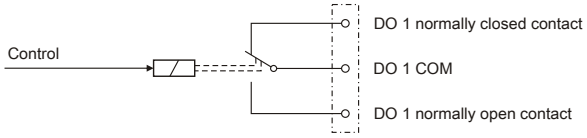

DO2 - DO 6 - Output circuit diagram

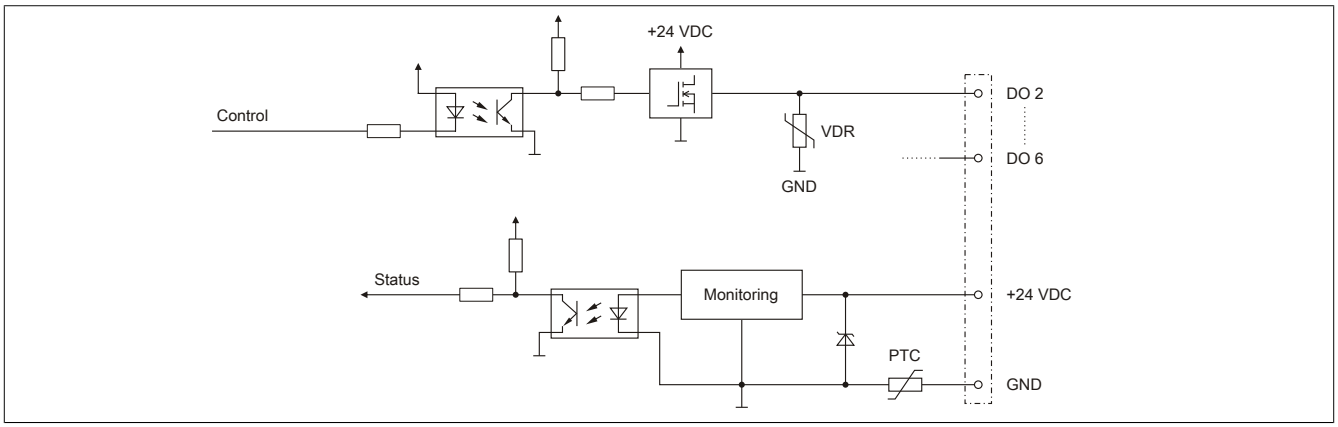

8 X2 analog current inputs

The X2 terminal measures the three phase currents of the generator mains using an externally connected current transformer. The measurement range of the current inputs can be configured as 1 A or 5 A.

Terminals X1 and X2 can be keyed differently to prevent unintentional incorrect connection on the module.

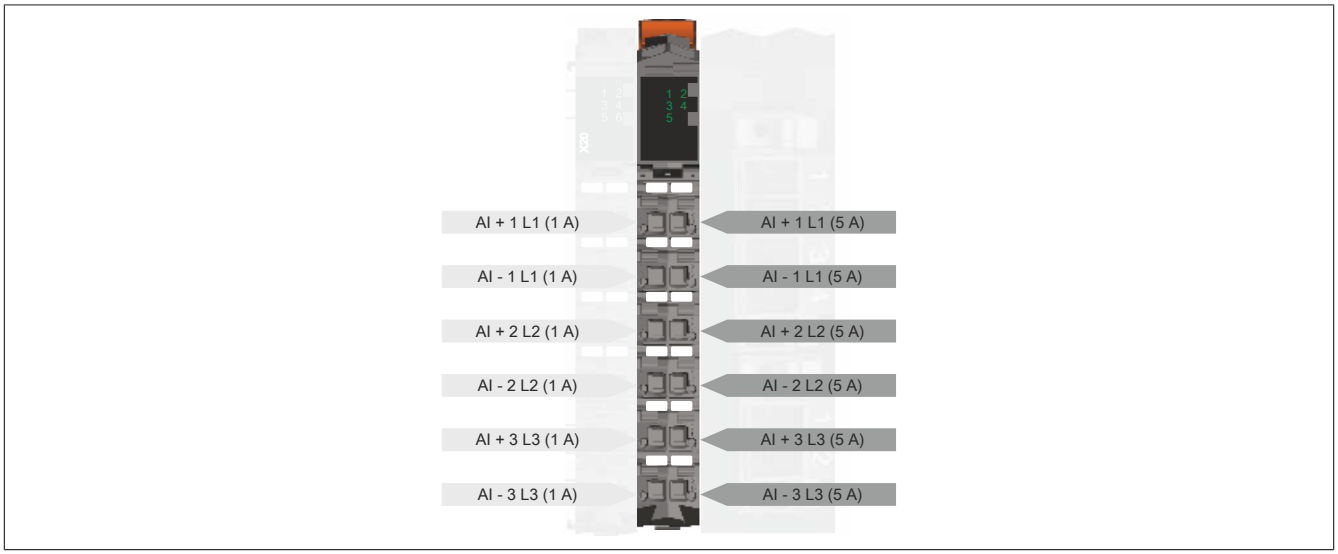

Danger!

Risk of electric shock!

The terminal block must only be allowed to conduct voltage when it is inserted. It must not under any circumstances be removed or inserted when voltage is applied or have voltage applied to it when it is removed.

Input circuit diagram - Analog current inputs

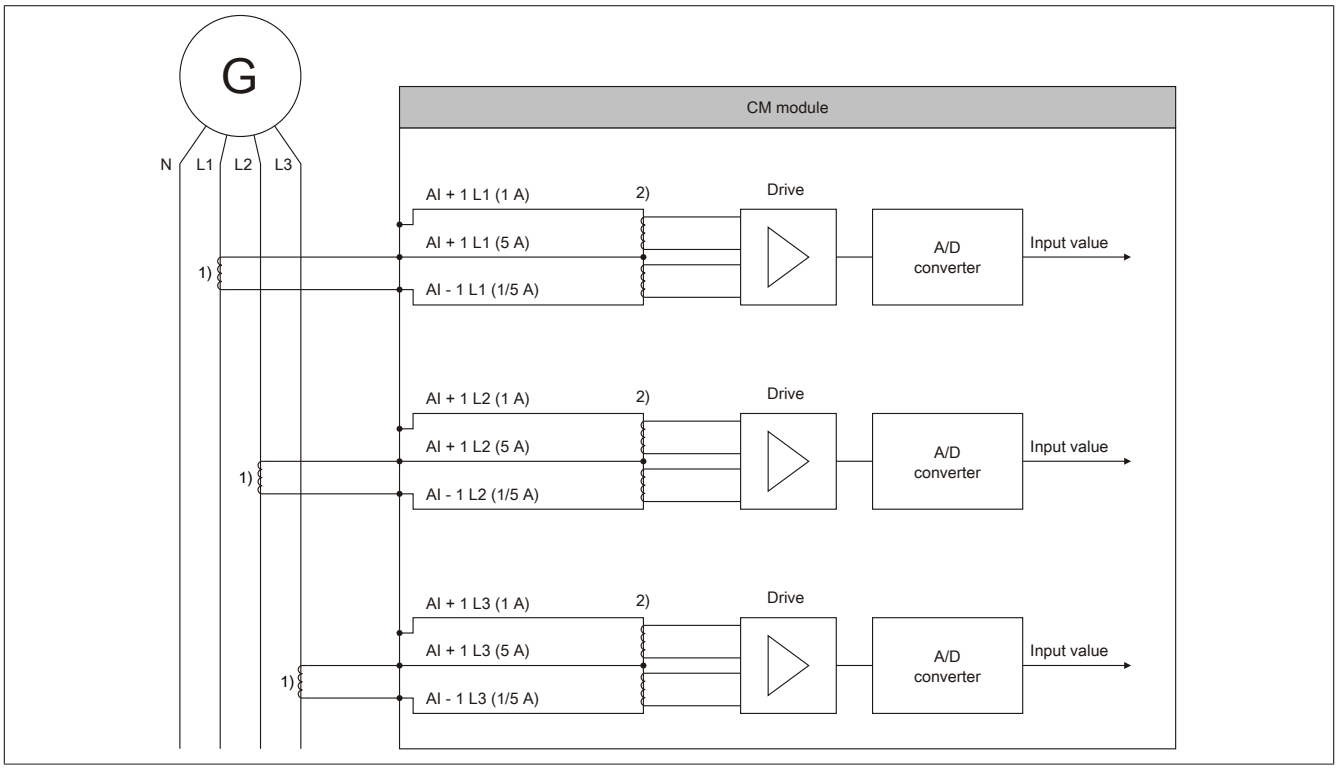

1) External current transformers
2) Internal current transformers

9 X3 and X5 analog voltage inputs

The X3 and X5 terminals are used to measure and monitor the line-to-line and phase voltages of the generator mains and bus bar.

- Terminal X3: Generator mains
- Terminal X5: Bus bar

Terminals X3 and X5 are keyed differently to prevent unintentional incorrect connection on the module. Section "Releasing the locking clip for terminals X3 - X6" on page 17 describes how to release the terminal locking clip.

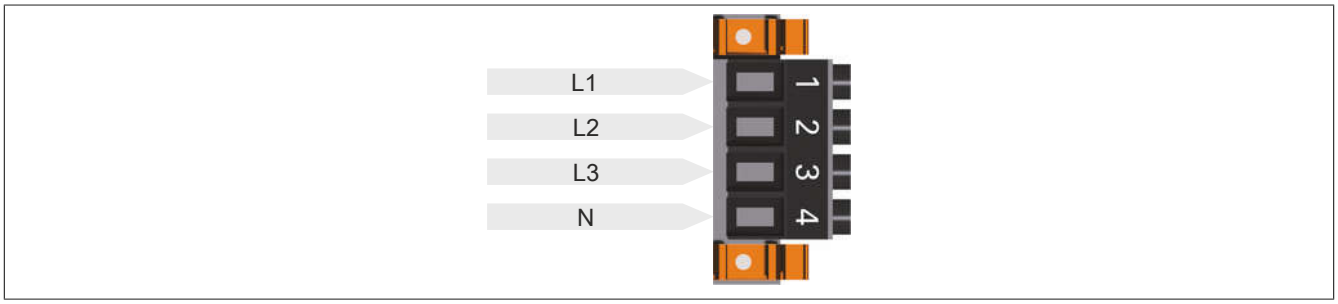

10 X4 and X6 analog voltage inputs

Terminals X4 and X6 are keyed differently to prevent unintentional incorrect connection on the module. Section "Releasing the locking clip for terminals X3 - X6" on page 17 describes how to release the terminal locking clip.

The two terminals are connected differently depending on the selected configuration (see register "ConfigOutput68" on page 31).

Configuration as synchronization network 1 / synchronization network 2

The voltage inputs on the X4 and X6 terminals are used to determine the line-to-line voltages for synchronization between two different mains networks.

- Terminal X4: Synchronization mains network 1
- Terminal X6: Synchronization mains network 2

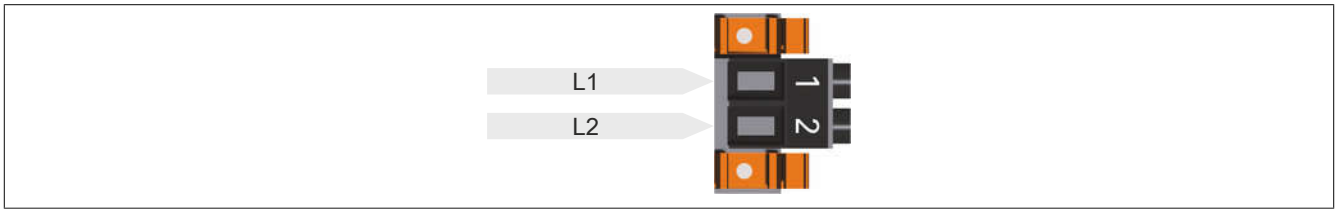

Configuration as 3-phase mains

The terminals X4 and X6 can be combined to form a 3-phase mains. The X4 and X6 terminals are used to measure and monitor the line-to-line voltages and phase voltages of the power mains.

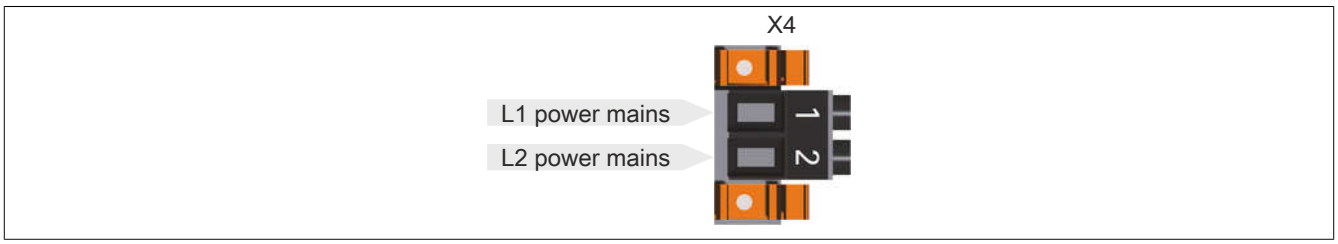

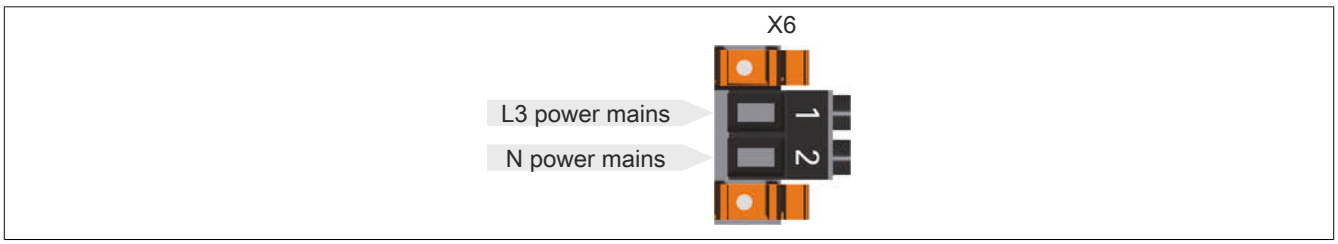

Input circuit diagram, analog voltage inputs

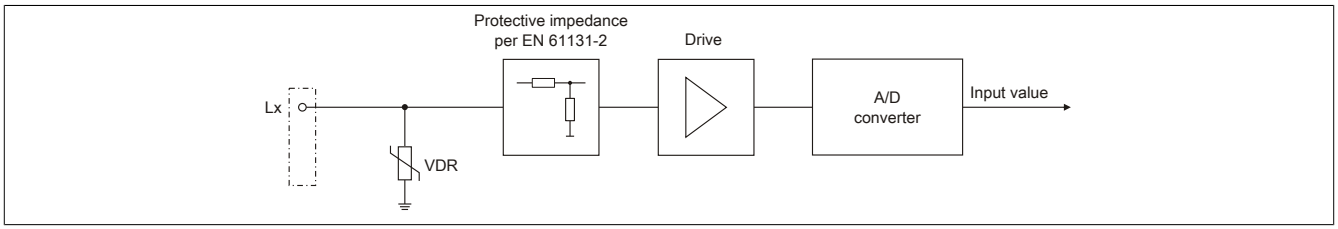

11 Circuit diagram

Example for network configuration "Synchronization network 1 / Synchronization network 2"

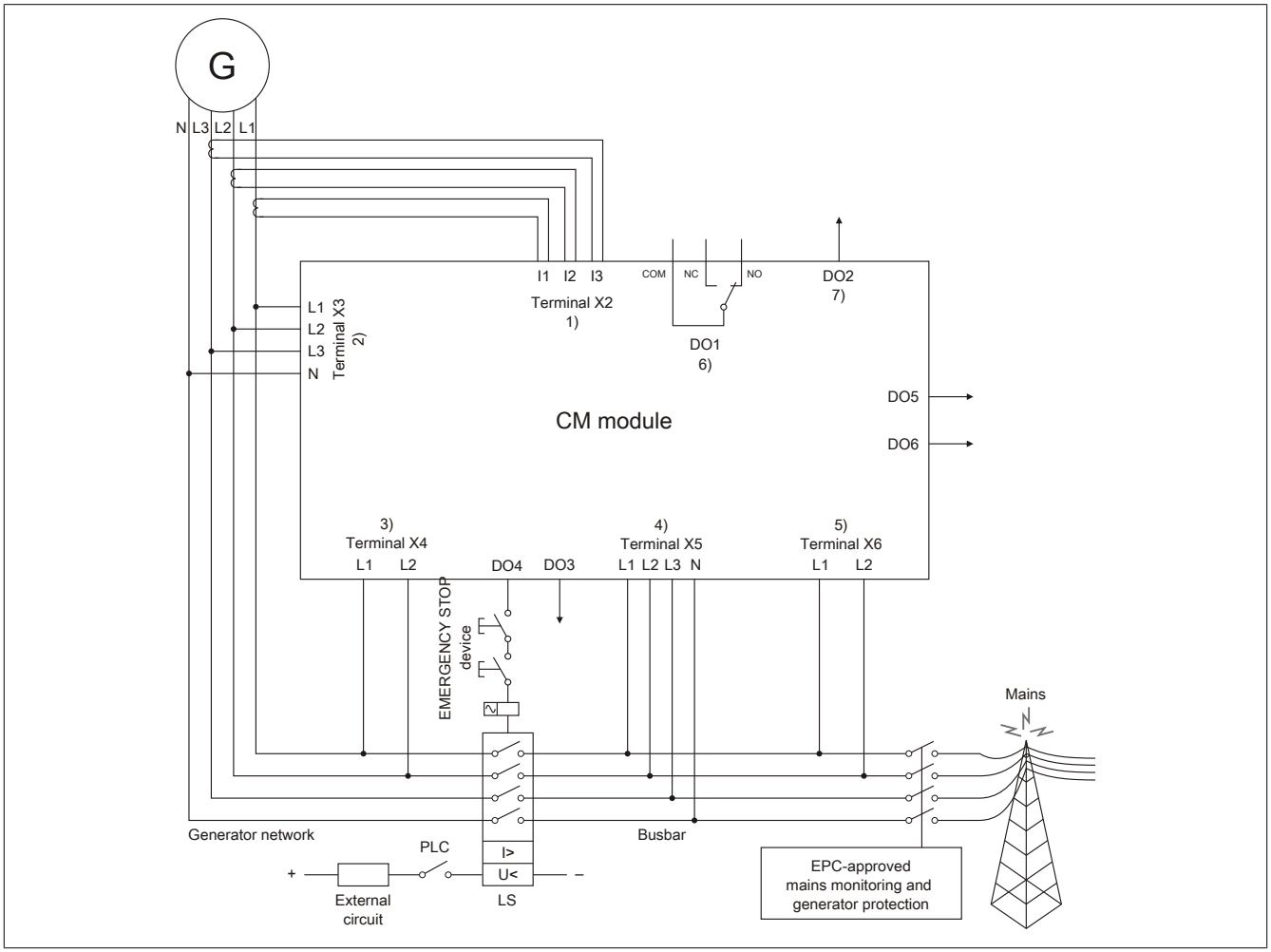

1) **Terminal X2:** Current inputs for generator network 5 A / 1 A
2) **Terminal X3:** Generator network 480 VAC / 120 VAC
3) **Terminal X4:** Synchronization network 1 480 VAC / 120 VAC
4) **Terminal X5:** Busbar network 480 VAC / 120 VAC
5) **Terminal X6:** Synchronization network 2 480 VAC / 120 VAC
6) **DO1:** Monitoring relay
7) **DO2:** Generator energy, pulse = x * kWh

Example of mains configuration "3-phase mains"

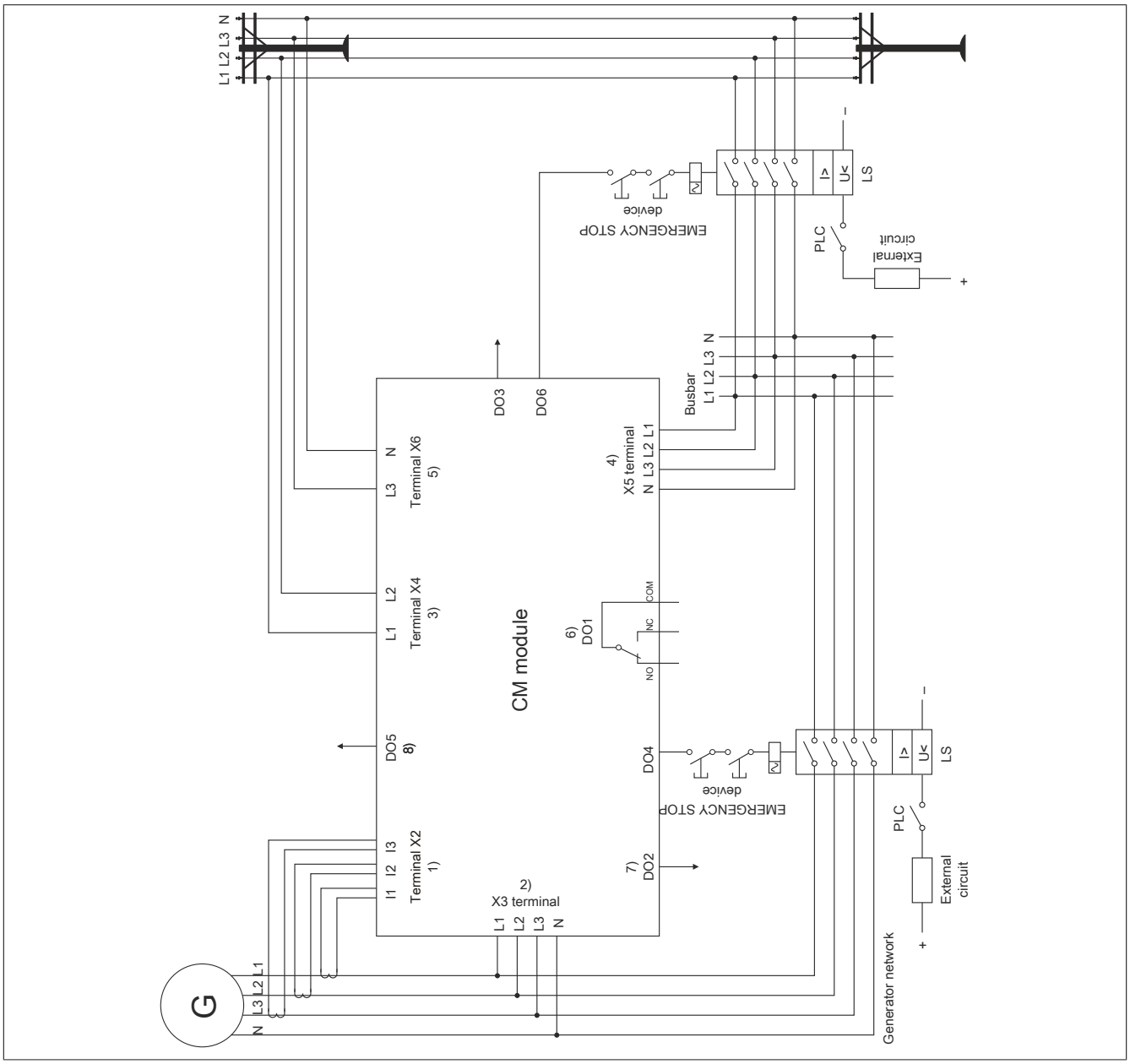

1) **Terminal X2:** Generator inputs for generator network 5 A / 1 A
2) **Terminal X3:** Generator network 480 VAC / 120 VAC
3) **Terminal X4:** Mains 480 VAC / 120 VAC
4) **Terminal X5:** Busbar network 480 VAC / 120 VAC
5) **Terminal X6:** Mains 480 VAC / 120 VAC
6) **DO1:** Generator monitoring
7) **DO2:** Generator energy pulse = x * kWh
8) **DO5:** Network monitoring

12 Typical connection examples for voltage/current measurement

For power measurement, the X3 terminal must always be used in connection with the X2 terminal! For single-phase measurement, always ensure that current input 1 is used for power measurement if voltage input 1 is being used. Otherwise, accurate power measurement is not possible for this phase!

Connection example 1

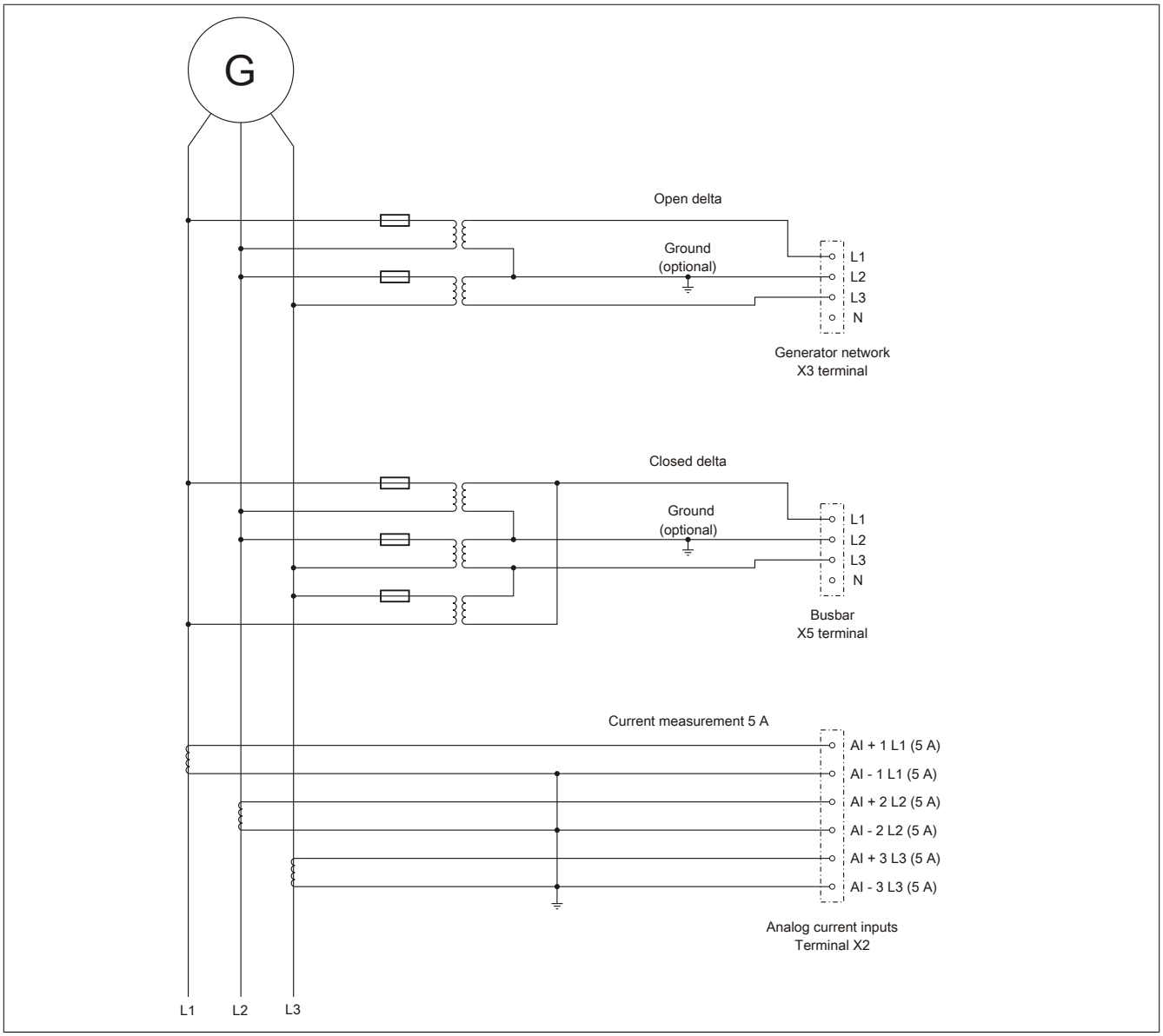

Connection example 2

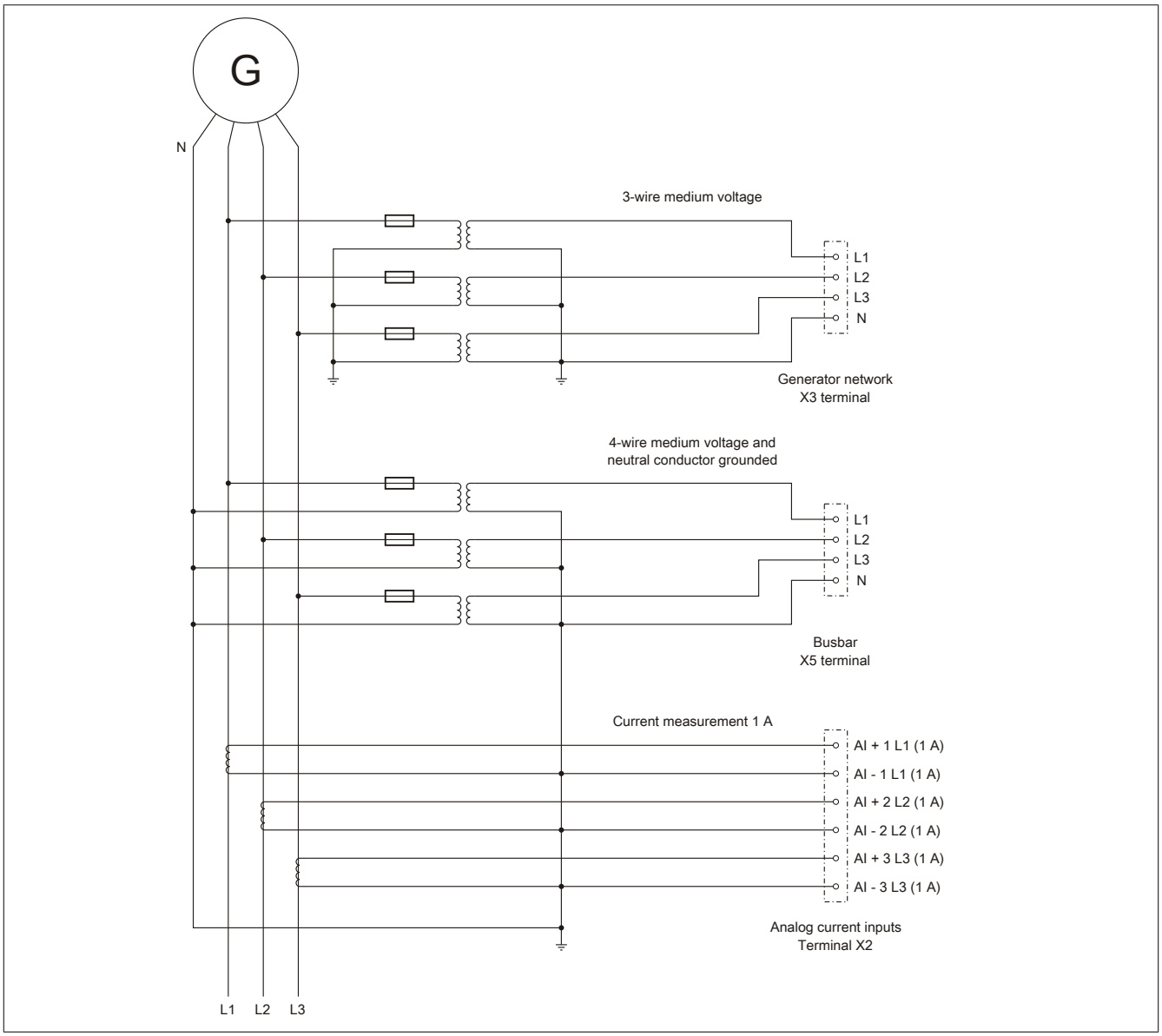

Connection example 3

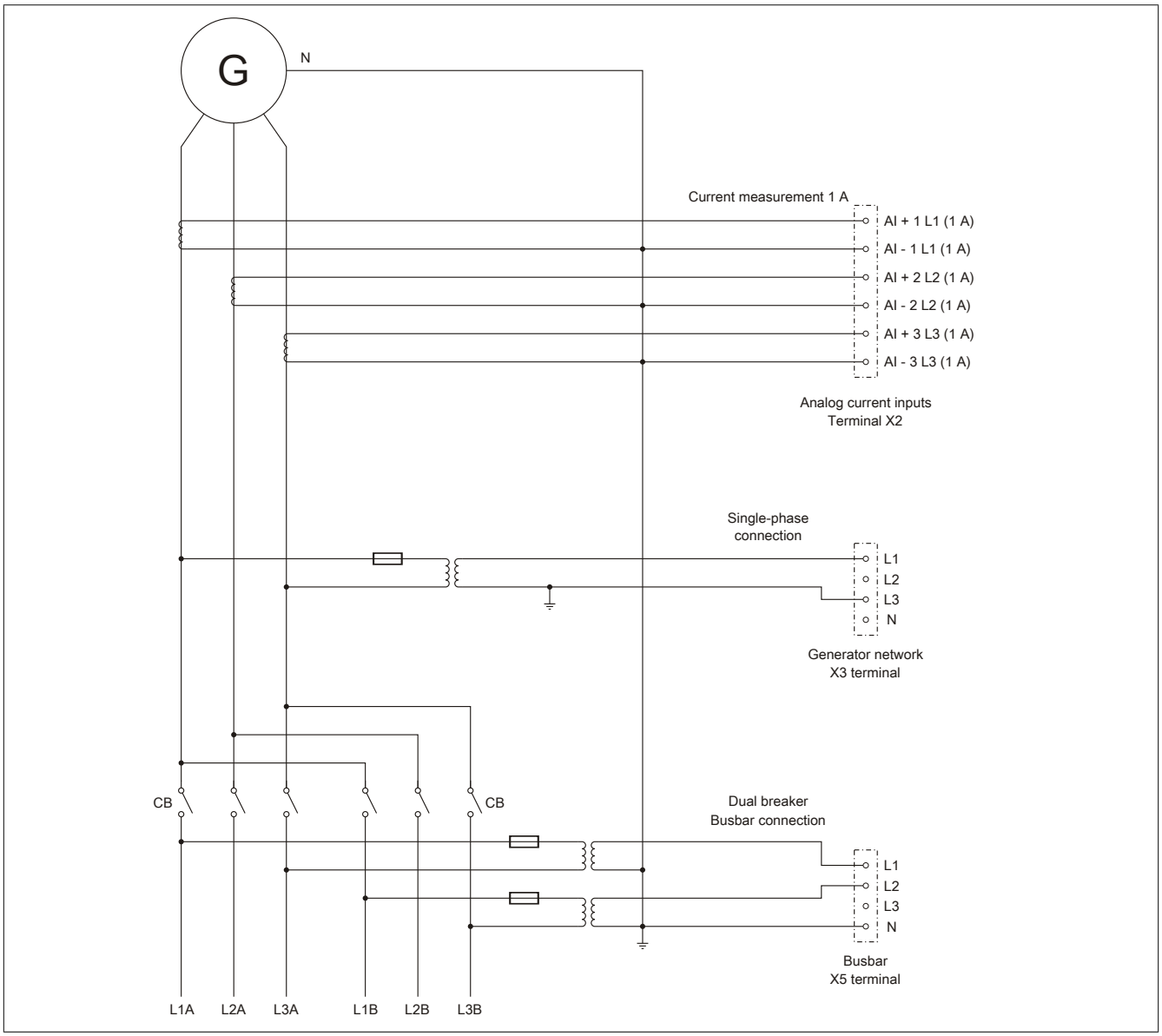

Connection example 4

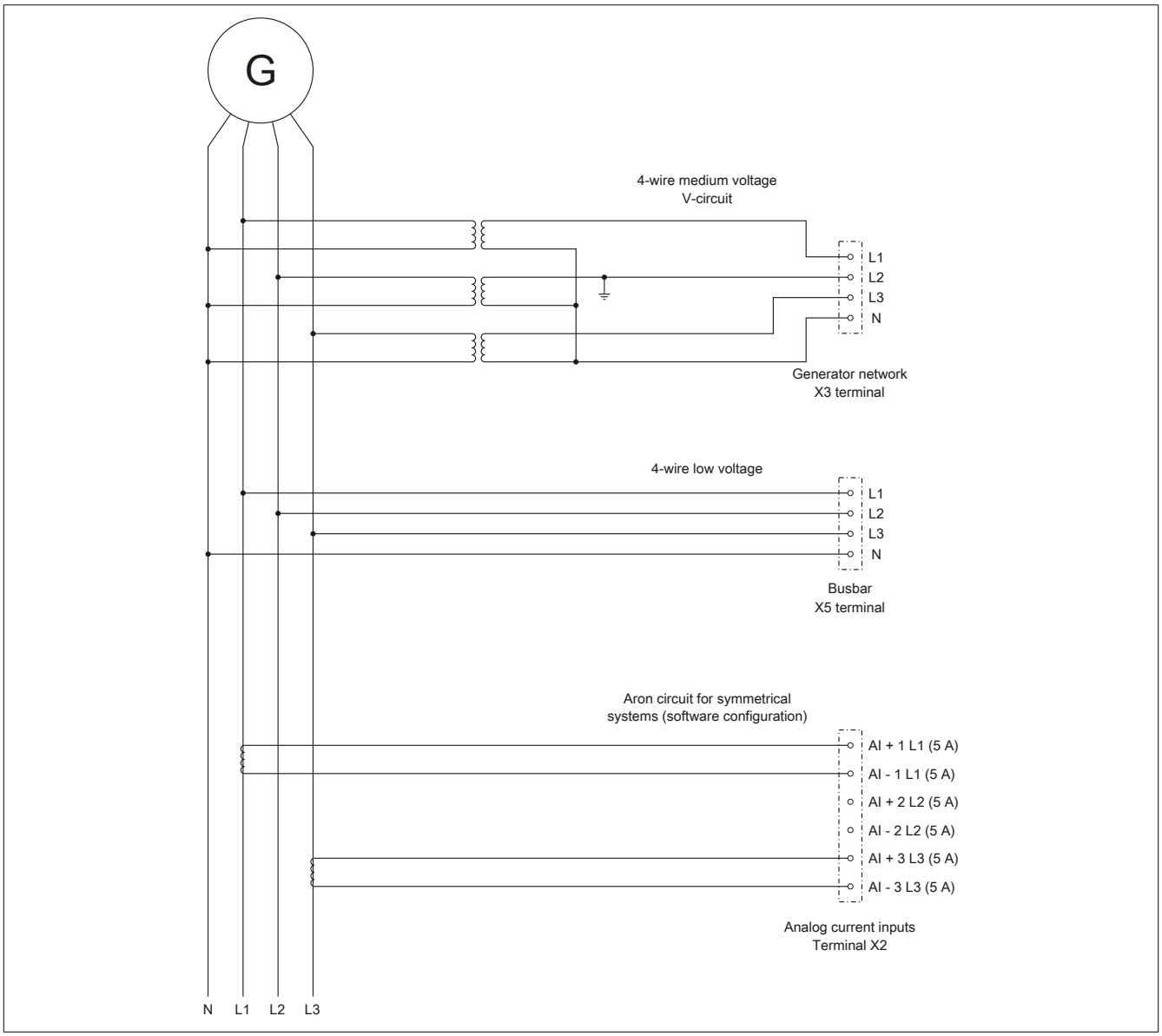

13 Electrical service life

The electrical service life for the DO1 relay output can be seen in the following diagram.

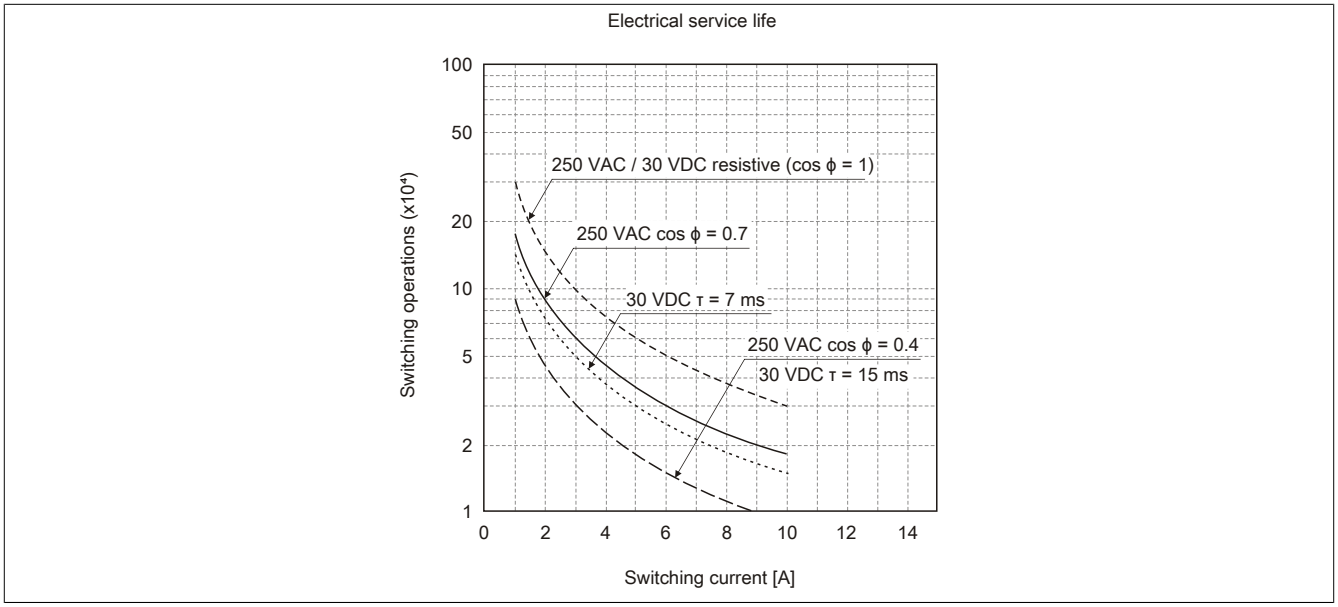

14 Releasing the locking clip for terminals X3 - X6

Terminals X3 - X6 are equipped with a terminal locking clip. This clip attaches the terminal block securely to the electronic module. This prevents the terminal from accidentally being disconnected.

To release the locking clip, press inwards on the corrugated part of the lever with your fingertip (1) and then slide outwards (2). No additional tools are required for removing the terminal.

Terminals X5 and X6 must be removed first before terminals X3 and X4 can be removed.



15 Synchronization functions

The following three synchronization functions are available on the module:

- "Synchronization with slip" on page 18
- "Synchro check" on page 18
- "Switching to voltage-free "dead bus"" on page 19

Synchronization with slip

The following is valid for synchronization mains 1 and synchronization mains 2:

- 50% < U < 125% of the nominal voltage U_N
- 80% < f < 110% of the nominal frequency f_N

The generator voltage is adjusted to the synchronization voltage with regard to amplitude and frequency. Taking into account the configured phase angle (Δα), a defined transformer vector group and the switching response time, the switch-on command is calculated and transmitted in advance so that the main contacts of the power switch are closed at the point of synchronicity.

Synchronization occurs under the following conditions:

- Synchronization mode "Slip" is set using software.
- The device is ready.
- The phase sequences of the mains networks being synchronized are OK (phase sequence detection).
- The configured limit for voltage difference is not exceeded (ΔU_{max}).
- The configured limits for frequency difference are not exceeded (Δf_{max} and Δf_{min}).
- The configured limit for the phase angle (including vector group transformer Δα) is not exceeded (j_{max}).

When the synchronization mode is set to "Slip", synchronization is not activated until the value of the differential angle between the two synchronized mains networks is >5° for at least 100 ms.

In other words, if the phase difference happens to be within ±5° at the time of the synchronization request, the synchronization won't be activated unless/until the phase difference is larger for 100 ms.

Resetting the mode "Synchronization with slip" cancels the synchronization.

In order to receive a synchronization pulse, the synchronization window must be entered from any phase direction after the synchronization command has been authorized and all of the synchronization conditions specified above are observed.
The switch is not engaged immediately after reaching the phase window. The switch is only engaged if synchronization is possible at the synchronization point while observing the switch lead time.

With very low frequency differences or equivalent frequencies and in adherence to the conditions described above, synchronization will also take place at a phase angle = 0°.

The synchronization output changes its state from Low to High when all conditions are met. It changes back from High to Low after the configured pulse duration has elapsed.

Synchro check

In this operating mode, the device can be used to check the synchronization. The DO4 output remains set as long as the following conditions are met:

- The "-Check" command is set using software.
- The device is ready.
- The phase sequences of the mains networks being synchronized are OK (phase sequence detection).
- The configured limit for voltage difference is not exceeded (ΔU_{max}).
- The configured limits for frequency difference are not exceeded (Δf_{max} and Δf_{min}).
- The defined limit for the phase angle is not exceeded (ϕ_{max}).

DO4 stays at High as long as all conditions are met.

Switching to voltage-free "dead bus"

The switch-on command for the power switch is output without synchronization if the following conditions have been met:

- The "Dead Bus" command is set using software.
- The device is ready.
- The bus bar does not have voltage applied: $U_B < U_{BminSync}$ as a percentage of U_{NomBus}

U_B ...	Bus bar phase voltage
$U_{BminSync}$ ...	Dead bus voltage
U_{NomBus} ...	Bus bar nominal voltage

DO4 changes its state from Low to High when all conditions are met. It changes back from High to Low after the configured pulse duration has elapsed.

16 Measurement functions

Timing diagram

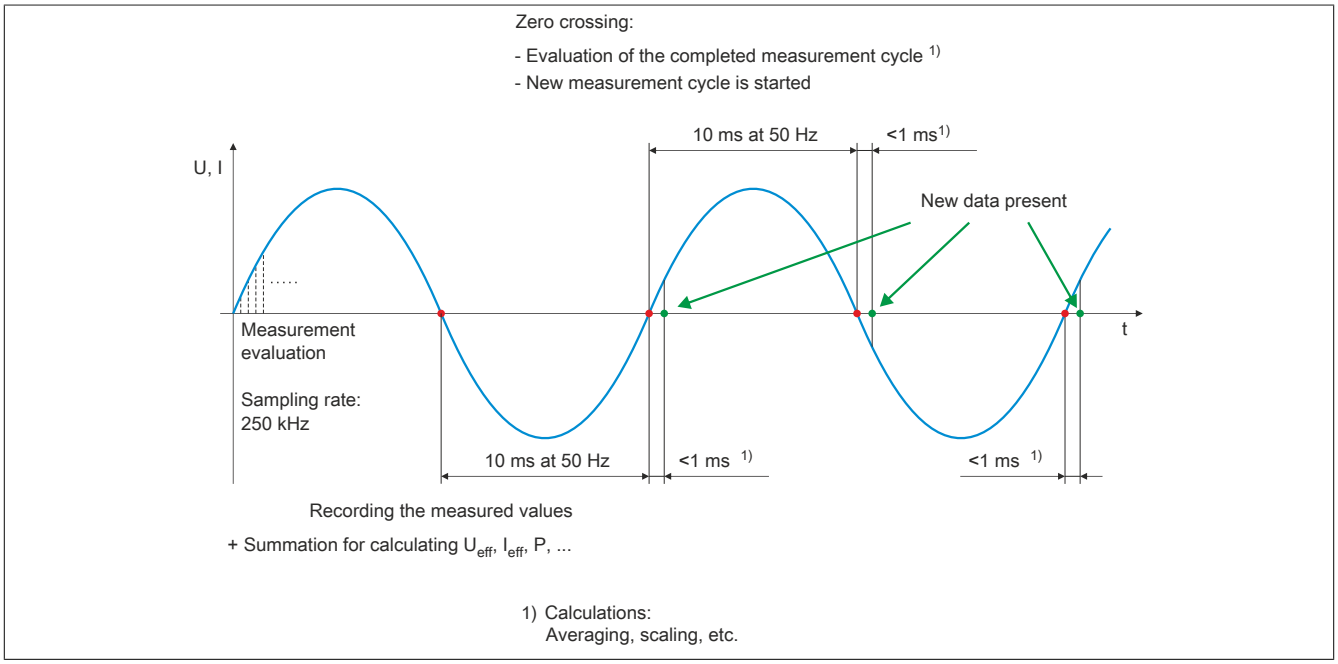

Measured parameters for generator mains (X3)

- Phase currents
- Current average
- Dynamic current average
- Neutral current
- Line-to-line voltages
- Phase voltages
- Voltage average
- Total apparent power
- Total reactive power
- Total active power
- Active power factor
- Frequency
- Instantaneous values of the phase voltages
- Instantaneous values of the phase currents

Measured parameters between synchronization mains networks

- Differential angle
- Differential voltage

Dependent overcurrent

Dependent overcurrent monitoring meets the requirements of EN 60255-151.

Dependent delayed imbalanced load monitoring

Dependent delayed imbalanced load monitoring protects against imbalanced loads in three-phase generators and three-phase mains. Parameters can be changed to make it possible to match the trigger characteristics to different generator types while taking their special thermal time constants into consideration.

An imbalanced load can be caused by uneven current distribution in the mains due to imbalanced load, asymmetrical short circuits, line interruptions or switching operations. Imbalanced loads result in reverse system currents in the stator, which causes harmonics with an uneven ordinal number in the stator winding and harmonics with an even ordinal number in the rotor winding. The rotor is at particular risk here because the harmonic waves place an additional load on the rotor winding and induce eddy currents in the rotor's solid iron, which may melt the metal or destroy the metallic structure.

An imbalanced load can be permissible within certain limits, however, when accounting for the thermal load limit of the generator. To avoid premature failure of the generator when an imbalanced load occurs, the characteristics that trigger imbalanced load protection should be adapted to the thermal characteristics of the generator. Imbalanced load protection can also be triggered by external errors in the mains caused by asymmetric short circuits.

Short circuit current monitoring

If overcurrent or a short circuit occurs and the limit value is exceeded, the error message "Short circuit current" is signaled after the configured time delay has passed.

Voltage asymmetry monitoring

This trigger value, specified as a percentage, is based on the nominal voltage of the generator. If the difference between the three line-to-line voltages of the generator mains exceeds the set limit value, then the error message "Voltage asymmetry" is signaled after the response time has passed. For this to happen, only one of these voltages has to exceed the respective limit value (in either the positive or negative direction).

Bus bar voltage measurement and zero voltage monitoring

3-phase monitoring takes place for the bus bar voltage. The measured values are represented as phase-to-phase and phase-to-neutral values. The D03 output is set when there is no voltage (below the lower limit of the defined limit bus bar voltage minimum U_{Bmin}) on the bus bar (X5 terminal).

This monitoring can be used to determine which synchronization function should be used.

Synchronization function	Bus bar voltage measurement
Dead bus	No voltage is being supplied to the bus bar or the value is below the lower limit parameter. Output DO3 is set.
Synchronization with slip	The voltage measured on the bus bar is above the defined parameter value. Output DO3 is not set.

Exciter failure

The reactive power monitoring can be used to protect a generator against operating in the impermissible range. The capacitive reactive power monitor offers protection against under-excitation (exciter failure). If the lower limit is exceeded (in the negative direction), the error message "Capacitive reactive power" is signaled after the configured time delay has passed.

Phase sequence detection

Phase sequence detection is used to detect incorrectly wired voltage and current inputs or if the generator is rotating in the wrong direction (for information about configuration, see register "ConfigOutput24" on page 32).

Phase sequence L1, L2 and L3 is monitored for this. If not correct, then an error message is output (see register "StatusDigitalOutput" on page 69) and synchronization cannot take place.

17 Generator operating modes

The operating modes possible for the generator are illustrated in this 4 quadrant diagram.

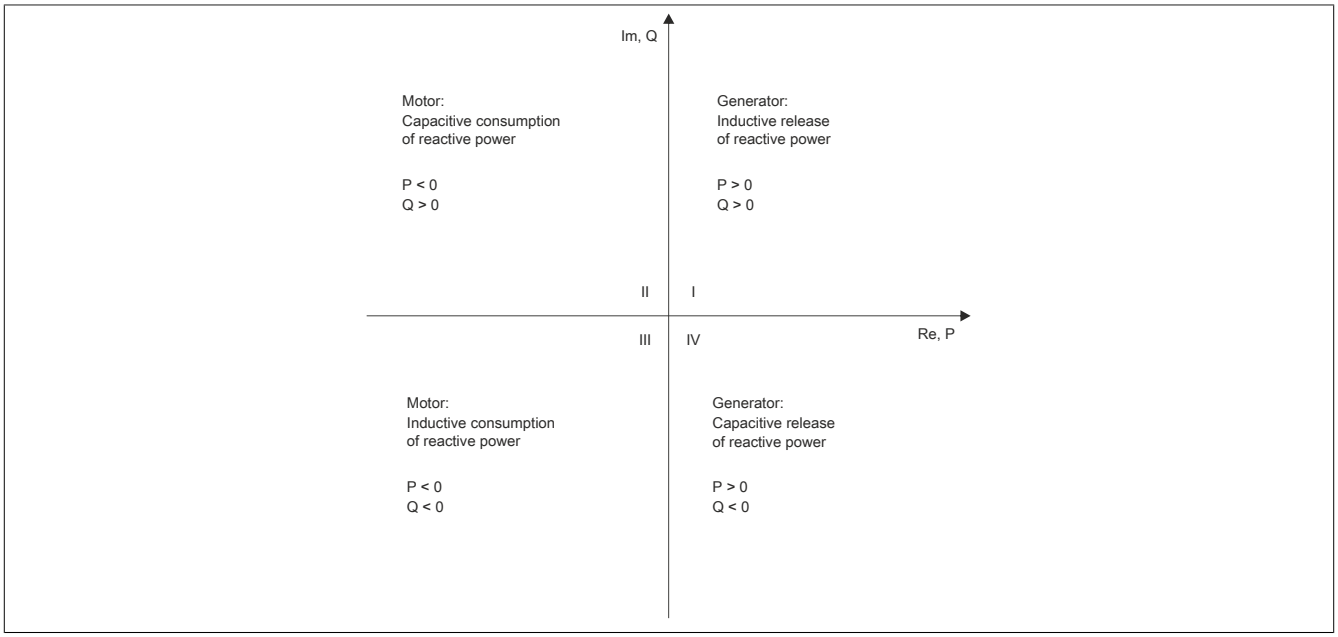

Quadrant I

Generator operation, inductive release of reactive power:

- The active power P and the reactive power Q are greater than 0.
- The phase angle ϕ is between 0 and 90°. This means that U keeps ahead of I.

Example: ϕ = 30°

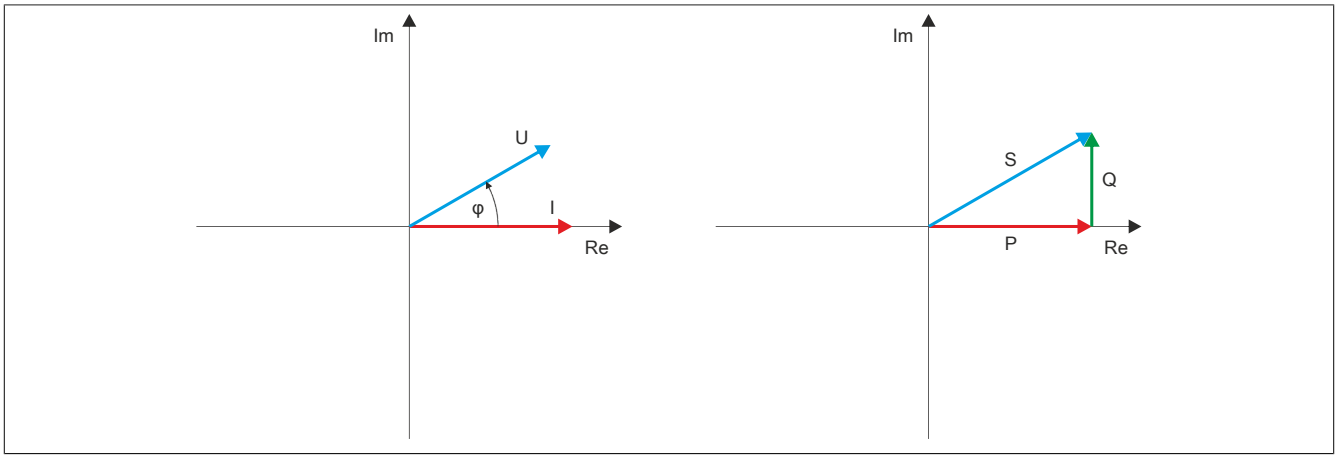

Quadrant II

Motor operation, capacitive reactive power consumption:

- The active power P is less than 0 while the reactive power Q is greater than 0.
- The phase angle ϕ is between 90 and 180°. This means that U keeps ahead of I.

Example: ϕ = 150°

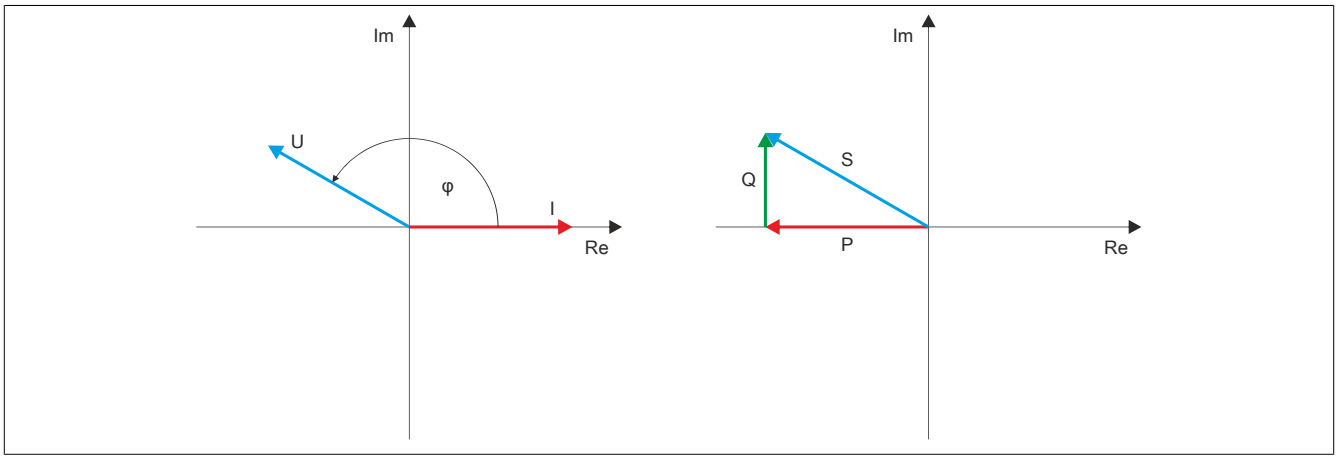

Quadrant III

Motor operation, inductive reactive power consumption:

- The active power P and the reactive power Q are less than 0.
- The phase angle ϕ is between -90 and -180°. This means that U lags behind I.

Example: ϕ = -150°

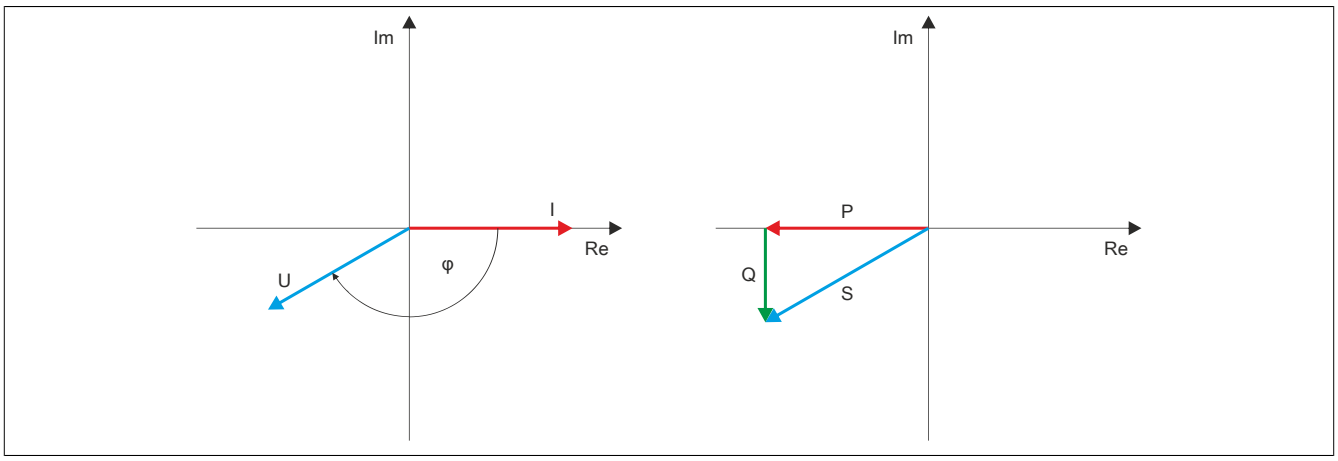

Quadrant IV

Generator operation, capacitive release of reactive power:

- The active power P is greater than 0 while the reactive power Q is less than 0.
- The phase angle ϕ is between 0 and -90°. This means that U lags behind I.

Example: ϕ = -30°

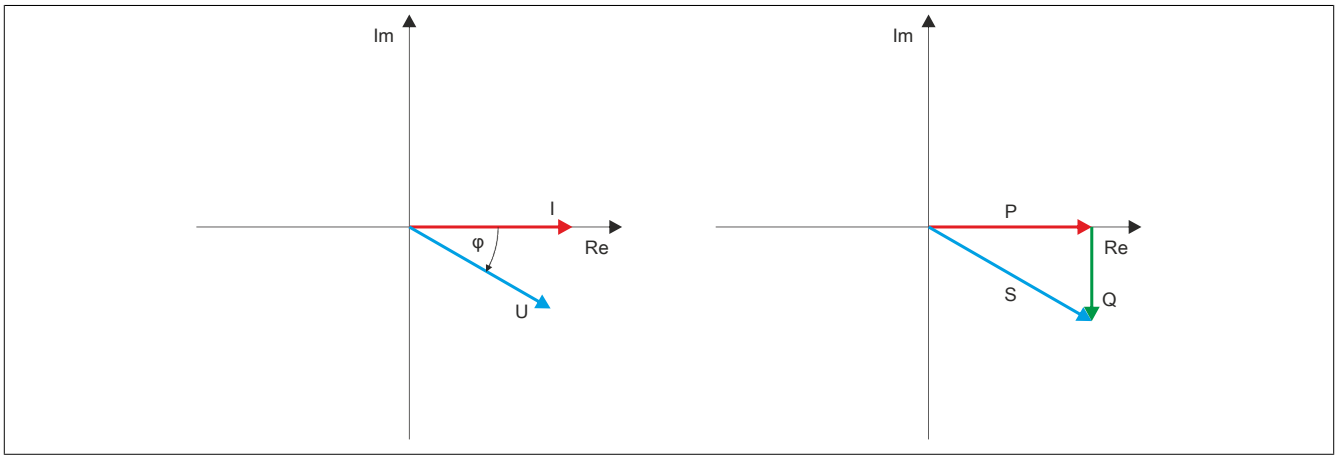

Power factor of the generator

The power factor is a product of the ratio between the active power P and apparent power S. With sinusoidal values, this corresponds to the cosine of the phase shift angle ϕ.

$$|Power\ factor| = \left|\frac{P}{S}\right|$$

The module derives the sign used for the power factor from the signs used with the P and Q values. In this way, it depends on the generator's operating mode:

Sign	Description
Positive	• Quadrant I or III, P and Q positive or P and Q negative • Inductive release of reactive power or inductive reactive power consumption
Negative	• Quadrant II or IV, P negative and Q positive or P positive and Q negative • Capacitive release of reactive power or capacitive reactive power consumption

18 Derating

Derating does not need to be taken into account for operation below 55°C.

For operation above 55°C, a dummy module must be connected to the left of the module. A maximum supply current of 1 A is permitted to pass through the module to the modules connected to the right.

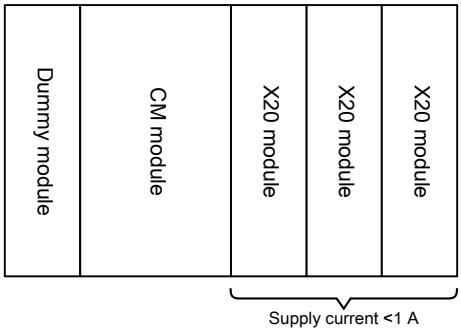

19 Register description

19.1 System requirements

The following minimum versions are recommended to generally be able to use all functions:

- Automation Studio 4.2.5
- Automation Runtime G4.26

19.2 General data points

In addition to the registers described in the register description, the module has additional general data points. These are not module-specific but contain general information such as serial number and hardware variant.

General data points are described in section "Additional information - General data points" in the X20 system user's manual.

19.3 Function model 0 - Standard

Register	Description	Data type	Read		Write	
			Cyclic	Acyclic	Cyclic	Acyclic
General registers - Configuration						
2762	ConfigOutput68 (Read) Network settings	UINT		(●)[1)]		●
2561	ConfigOutput20 (Read) Nominal voltage range, nominal current range and Aron circuit	USINT		(●)[1)]		●
2614	ConfigOutput10 (Read) Nominal frequency (f_{Nom})	UINT		(●)[1)]		●
2569	ConfigOutput24 (Read) General configuration register	USINT		(●)[1)]		●
2567	ConfigOutput23 (Read) Trigger bits	USINT		(●)[1)]		●
Generator network - Configuration						
2582	ConfigOutput02 (Read) Nominal voltage of the generator network ($_{UNomGen}$)	UINT		(●)[1)]		●
2598	ConfigOutput06 (Read) Multiplier for the generator network	UINT		(●)[1)]		●
2590	ConfigOutput04 (Read) Nominal current of the generator network ($_{INom}$)	UINT		(●)[1)]		●
2610	ConfigOutput09 (Read) Multiplier for current transformer	UINT		(●)[1)]		●
2563	ConfigOutput21 (Read) Enables/Disables generator network functions	UINT		(●)[1)]		●
2746	ConfigOutput41 (Read) Low-pass filter for total power ratings	UINT		(●)[1)]		●
2966	ConfigOutput125(Read) Filter cycles for real-time values	UINT		(●)[1)]		●
Generator monitoring functions - Configuration						
2658	ConfigOutput16 (Read) Overvoltage limit value 1 of the generator network (U_{maxGen})	UINT		(●)[1)]		●
2938	ConfigOutput118 (Read) Overvoltage limit value 2 of the generator network (U_{maxGen})	UINT		(●)[1)]		●
2706	ConfigOutput26 (Read) Response time 1 for generator overvoltage (U_{maxGen})	UINT		(●)[1)]		●
2942	ConfigOutput119 (Read) Response time 2 for generator overvoltage (U_{maxGen})	UINT		(●)[1)]		●
2662	ConfigOutput27 (Read) Undervoltage limit value of generator network 1 ($U_{min1Gen}$)	UINT		(●)[1)]		●
2702	ConfigOutput59 (Read) Undervoltage limit value of generator network 2 ($U_{min2Gen}$)	UINT		(●)[1)]		●
2710	ConfigOutput28 (Read) Response time for generator undervoltage 1 ($U_{min1Gen}$)	UINT		(●)[1)]		●
2734	ConfigOutput65 (Read) Response time for generator undervoltage 2 ($U_{min2Gen}$)	UINT		(●)[1)]		●
2666	ConfigOutput29 (Read) Generator overfrequency 1 (f_{maxGen})	UINT		(●)[1)]		●
2954	ConfigOutput122 (Read) Generator overfrequency 2 (f_{maxGen})	UINT		(●)[1)]		●
2714	ConfigOutput30 (Read) Response time 1 for generator overfrequency (f_{maxGen})	UINT		(●)[1)]		●
2958	ConfigOutput123 (Read) Response time 2 for generator overfrequency (f_{maxGen})	UINT		(●)[1)]		●
2670	ConfigOutput31 (Read) Generator underfrequency 1 (f_{minGen})	UINT		(●)[1)]		●
2946	ConfigOutput120 (Read) Generator underfrequency 2 (f_{minGen})	UINT		(●)[1)]		●

Register	Description	Data type	Read		Write	
			Cyclic	Acyclic	Cyclic	Acyclic
2718	ConfigOutput32 (Read) Response time 1 for generator underfrequency (f_{minGen})	UINT		(●)[1)]		●
2950	ConfigOutput121 (Read) Response time 2 for generator underfrequency (f_{minGen})	UINT		(●)[1)]		●
2674	ConfigOutput33 (Read) Generator voltage unbalance (U_{asGen})	UINT		(●)[1)]		●
2722	ConfigOutput34 (Read) Response time for the generator voltage unbalance (U_{asGen})	UINT		(●)[1)]		●
2742	ConfigOutput35 (Read) Load time constant for current unbalance	UINT		(●)[1)]		●
2902	ConfigOutput109 (Read) Unbalanced load constant	UINT		(●)[1)]		●
2962	ConfigOutput124 (Read) Nominal current of the generator network for unbalanced load protection	UINT		(●)[1)]		●
2678	ConfigOutput36 (Read) Maximum limit value of neutral current	UINT		(●)[1)]		●
2726	ConfigOutput37 (Read) Response time for neutral current monitoring	UINT		(●)[1)]		●
2682	ConfigOutput38 (Read) Short-circuit current	UINT		(●)[1)]		●
2730	ConfigOutput39 (Read) Response time for short-circuit current	UINT		(●)[1)]		●
2686	ConfigOutput42 (Read) Dependent overcurrent	UINT		(●)[1)]		●
2690	ConfigOutput43 (Read) Time factor setting (iths) for dependent overcurrent	UINT		(●)[1)]		●
2694	ConfigOutput44 (Read) Capacitive reactive power	UINT		(●)[1)]		●
2738	ConfigOutput45 (Read) Response time for reactive power monitoring	UINT		(●)[1)]		●
2830	ConfigOutput89 (Read) Generator overload	UINT		(●)[1)]		●
2834	ConfigOutput90 (Read) Response time for generator overload	UINT		(●)[1)]		●
2838	ConfigOutput91 (Read) Generator feedback	UINT		(●)[1)]		●
2842	ConfigOutput92 (Read) Response time for generator feedback	UINT		(●)[1)]		●
2970	ConfigOutput126(Read) Q-U protection	UINT		(●)[1)]		●
2974	ConfigOutput127(Read) Response time for Q-U protection	UINT		(●)[1)]		●
3026	ConfigOutput136 (Read) Tripping characteristic for dependent overcurrent	UINT		(●)[1)]		●
	Function DO1					
2698	ConfigOutput57 (Read) Monitoring functions - 1	UINT		(●)[1)]		●
2854	ConfigOutput97 (Read) Monitoring functions - 2	UINT		(●)[1)]		●
Synchronization networks (for network configuration "Synchronization network 1 / Synchronization network 2") - Configuration						
2578	ConfigOutput01 (Read) Nominal voltage of the synchronization networks ($_{UNomSyn}$)	UINT		(●)[1)]		●
2602	ConfigOutput07 (Read) Multiplier for synchronization network 1	UINT		(●)[1)]		●
2606	ConfigOutput08 (Read) Multiplier for synchronization network 2	UINT		(●)[1)]		●
Network (for network configuration "3-phase network") - Configuration						
2578	ConfigOutput01 (Read) Nominal voltage of the network (U_{NomNet})	UINT		(●)[1)]		●
2602	ConfigOutput07 (Read) Multiplier for the network	UINT		(●)[1)]		●
2565	ConfigOutput22 (Read) Enables/Disables network functions	UINT		(●)[1)]		●
Network monitoring functions (for network configuration "3-phase network") - Configuration						
	Network voltage monitoring					
2766	ConfigOutput73 (Read) Overvoltage limit value 1 of the network (U_{maxNet})	UINT		(●)[1)]		●
2978	ConfigOutput128(Read) Overvoltage limit value 1 dropout threshold	UINT		(●)[1)]		●
2802	ConfigOutput82 (Read) Response time 1 for network overvoltage (U_{maxNet})	UINT		(●)[1)]		●
2858	ConfigOutput98 (Read) Overvoltage limit value 2 of the network (U_{maxNet})	UINT		(●)[1)]		●
2986	ConfigOutput130(Read) Overvoltage limit value 2 dropout threshold	UINT		(●)[1)]		●
2862	ConfigOutput99 (Read) Response time 2 for network overvoltage (U_{maxNet})	UINT		(●)[1)]		●

Register	Description	Data type	Read		Write	
			Cyclic	Acyclic	Cyclic	Acyclic
2774	ConfigOutput75 (Read) Network overfrequency 1 (f_{maxNet})	UINT		(●)[1)]		●
2994	ConfigOutput132(Read) Overfrequency limit value 1 dropout threshold	UINT		(●)[1)]		●
2810	ConfigOutput84 (Read) Response time 1 for network overfrequency (f_{maxNet})	UINT		(●)[1)]		●
2874	ConfigOutput102 (Read) Network overfrequency 2 (f_{maxNet})	UINT		(●)[1)]		●
3002	ConfigOutput134Read Overfrequency limit value 2 dropout threshold	UINT		(●)[1)]		●
2878	ConfigOutput103 (Read) Response time 2 for network overfrequency (f_{maxNet})	UINT		(●)[1)]		●
2778	ConfigOutput76 (Read) Network underfrequency 1 (f_{minNet})	UINT		(●)[1)]		●
2998	ConfigOutput133Read Underfrequency limit value 1 dropout threshold	UINT		(●)[1)]		●
2814	ConfigOutput85 (Read) Response time 1 for network underfrequency (f_{minNet})	UINT		(●)[1)]		●
2882	ConfigOutput104 (Read) Network underfrequency 2 (f_{minNet})	UINT		(●)[1)]		●
3006	ConfigOutput135Read Underfrequency limit value 2 dropout threshold	UINT		(●)[1)]		●
2886	ConfigOutput105 (Read) Response time 2 for network underfrequency (f_{minNet})	UINT		(●)[1)]		●
2782	ConfigOutput77 (Read) Network voltage unbalance (U_{asNet})	UINT		(●)[1)]		●
2818	ConfigOutput86 (Read) Response time for network voltage unbalance (U_{asNet})	UINT		(●)[1)]		●
	Undervoltage monitoring in 2-point mode					
2770	ConfigOutput74 (Read) Undervoltage limit value 1 of the network (U_{minNet})	UINT		(●)[1)]		●
2982	ConfigOutput129(Read) Undervoltage limit value 1 dropout threshold	UINT		(●)[1)]		●
2806	ConfigOutput83 (Read) Response time 1 for network undervoltage (U_{minNet})	UINT		(●)[1)]		●
2866	ConfigOutput100 (Read) Undervoltage limit value 2 of the network (U_{minNet})	UINT		(●)[1)]		●
2990	ConfigOutput131(Read) Undervoltage limit value 2 dropout threshold	UINT		(●)[1)]		●
2870	ConfigOutput101 (Read) Response time 2 for network undervoltage (U_{minNet})	UINT		(●)[1)]		●
	Undervoltage monitoring in 6-point mode					
2770	ConfigOutput74 (Read) Undervoltage limit value (U_{minNet}) (1st network)	UINT		(●)[1)]		●
2866	ConfigOutput100 (Read) Undervoltage limit value (U_{minNet}) (2nd network)	UINT		(●)[1)]		●
2906	ConfigOutput110 (Read) Undervoltage limit value (U_{minNet}) (3rd network)	UINT		(●)[1)]		●
2914	ConfigOutput112 (Read) Undervoltage limit value (U_{minNet}) (4th network)	UINT		(●)[1)]		●
2922	ConfigOutput114 (Read) Undervoltage limit value (U_{minNet}) (5th network)	UINT		(●)[1)]		●
2930	ConfigOutput116 (Read) Undervoltage limit value (U_{minNet}) (6th network)	UINT		(●)[1)]		●
2806	ConfigOutput83 (Read) Response time for network undervoltage (U_{minNet}) (1st network)	UINT		(●)[1)]		●
2870	ConfigOutput101 (Read) Response time for network undervoltage (U_{minNet}) (2nd network)	UINT		(●)[1)]		●
2910	ConfigOutput111 (Read) Response time for network undervoltage (U_{minNet}) (3rd network)	UINT		(●)[1)]		●
2918	ConfigOutput113 (Read) Response time for network undervoltage (U_{minNet}) (4th network)	UINT		(●)[1)]		●
2926	ConfigOutput115 (Read) Response time for network undervoltage (U_{minNet}) (5th network)	UINT		(●)[1)]		●
2934	ConfigOutput117 (Read) Response time for network undervoltage (U_{minNet}) (6th network)	UINT		(●)[1)]		●
	Microgrid monitoring					
2890	ConfigOutput106 (Read) Overvoltage limit value of the microgrid (U_{maxNet})	UINT		(●)[1)]		●
2894	ConfigOutput107 (Read) Undervoltage limit value of the microgrid (U_{minNet})	UINT		(●)[1)]		●
2898	ConfigOutput108 (Read) Response time for the microgrid limit value	UINT		(●)[1)]		●
	Phase shift monitoring					
2786	ConfigOutput78 (Read) Maximum phase difference for a single phase	UINT		(●)[1)]		●

Register	Description	Data type	Read		Write	
			Cyclic	Acyclic	Cyclic	Acyclic
2790	ConfigOutput79 (Read) Maximum phase difference for three phases	UINT		(●)[1]		●
2826	ConfigOutput88 (Read) Minimum voltage for phase shift monitoring	UINT		(●)[1]		●
	Network frequency change					
2794	ConfigOutput80 (Read) Response value for network frequency change (df/dt)	UINT		(●)[1]		●
2822	ConfigOutput87 (Read) Number of periods for network frequency change (df/dt)	UINT		(●)[1]		●
	Function DO5					
2798	ConfigOutput81 (Read) Monitoring functions	UINT		(●)[1]		●
Busbar - Configuration						
2586	ConfigOutput03 (Read) Nominal voltage of busbar (U_{NomBus})	UINT		(●)[1]		●
2594	ConfigOutput05 (Read) Multiplier for busbar	UINT		(●)[1]		●
2650	ConfigOutput40 (Read) Minimum busbar voltage (U_{Bmin})	UINT		(●)[1]		●
Synchronization - Configuration						
3	ConfigOutputPacked01 Synchronization mode	USINT			●	
2654	ConfigOutput56 (Read) Synchronization configuration	UINT		(●)[1]		●
2626	ConfigOutput11 (Read) Maximum permissible differential frequency (df_{max})	UINT		(●)[1]		●
2630	ConfigOutput12 (Read) Minimum permissible differential frequency (df_{min})	UINT		(●)[1]		●
2634	ConfigOutput13 (Read) Maximum permissible differential voltage (dU_{max})	UINT		(●)[1]		●
2638	ConfigOutput14 (Read) Maximum permissible differential angle (ϕ_{Max})	UINT		(●)[1]		●
2618	ConfigOutput15 (Read) Phase rotation of synchronization network 1 (dα)	UINT		(●)[1]		●
2754	ConfigOutput47 (Read) Pulse duration of switch-on relay on DO4	UINT		(●)[1]		●
2758	ConfigOutput48 (Read) Circuit breaker response time on DO4	UINT		(●)[1]		●
2642	ConfigOutput95 (Read) Pulse duration of switch-on relay on DO6	UINT		(●)[1]		●
2646	ConfigOutput96 (Read) Circuit breaker response time on DO6	UINT		(●)[1]		●
2622	ConfigOutput58 (Read) Dead bus voltage ($U_{BminSync}$)	UINT		(●)[1]		●
2846	ConfigOutput93 (Read) 2-phase synchronization for commissioning tests	UINT		(●)[1]		●
Maximum value storage and power meter - Configuration						
2750	ConfigOutput46 (Read) Pulse value of energy meter output	UINT		(●)[1]		●
2850	ConfigOutput94 (Read) Count value for active energy meter and reactive energy meter	UINT		(●)[1]		●
3074	ConfigOutput49 Maximum phase current of generator I1	INT		●		
	ConfigOutput60 Reset maximum phase current I1	INT				●
3078	ConfigOutput50 Maximum phase current I2	INT		●		
	ConfigOutput61 Reset maximum phase current I2	INT				●
3082	ConfigOutput51 Maximum phase current I3	INT		●		
	ConfigOutput62 Resets maximum phase current I3	INT				●
3086	ConfigOutput52 Maximum total active power	INT		●		
	ConfigOutput63 Resets maximum total active power	INT				●
3090	ConfigOutput53 Maximum neutral current	INT		●		
	ConfigOutput64 Resets maximum neutral current	INT				●
3108	ConfigOutput54 Active energy meter for supply	DINT		●		
	ConfigOutput66 Writes to active energy meter for supply	DINT				●
3124	ConfigOutput55 Reactive energy meter for supply	DINT		●		
	ConfigOutput67 Writes to reactive energy meter for supply	DINT				●

Register	Description	Data type	Read		Write	
			Cyclic	Acyclic	Cyclic	Acyclic
3116	ConfigOutput71 Active energy meter for reference	DINT		•		
	ConfigOutput69 Writes to active energy meter for reference	DINT				•
3132	ConfigOutput72 Reactive energy meter for reference	DINT		•		
	ConfigOutput70 Writes to reactive energy meter for reference	DINT				•
General registers - Communication						
1	DigitalOutputPacked01 Digital outputs 01, 05 - 06 and various control bits	USINT			•	
	DigitalOutput05	Bit 0				
	DigitalOutput06	Bit 1				
	ResetGeneratorErrors	Bit 2				
	ResetMainsErrors	Bit 3				
	InvertDO5	Bit 4				
	DigitalOutput01	Bit 5				
165	StatusDigitalOutputPacked01 Status of digital outputs	USINT	•			
	StatusDigitalOutput01	Bit 0				
	...	...				
	StatusDigitalOutput06	Bit 5				
	StatusInput17	Bit 6				
	StatusInput16	Bit 7				
162	StatusInputPacked01 Generator network error register	UINT	•			
	StatusInput01	Bit 0				
	...	...				
	StatusInput11	Bit 10				
	StatusInput31	Bit 11				
	StatusInput32	Bit 12				
	StatusInput18	Bit 15				
167	StatusInputPacked02 Network error register	USINT	•			
	StatusInput24	Bit 0				
	...	...				
	StatusInput30	Bit 6				
	StatusInput33	Bit 7				
186	StatusInputPacked03 General error register	UINT	•			
	StatusInput12	Bit 0				
	...	...				
	StatusInput15	Bit 3				
	StatusInput19	Bit 4				
	...	...				
	StatusInput23	Bit 7				
190	StatusInputPacked04 Network error register (continued)	UINT	•			
	StatusInput34	Bit 0				
	...	...				
	StatusInput37	Bit 4				
194	StatusInputPacked05 Generator network error register (continued)	UINT	•			
	StatusInput38	Bit 0				
	...	...				
	StatusInput41	Bit 3				
Measured values for generator network - Communication						
30	AnalogInput01 Phase current I1	INT	•			
34	AnalogInput02 Phase current I2	INT	•			
38	AnalogInput03 Phase current I3	INT	•			
42	AnalogInput04 Current average I1, I2, I3	INT	•			
46	AnalogInput05 Neutral current In	INT	•			
170	AnalogInput06 Current average, dynamic (Im_dyn)	UINT	•			
2	AnalogInput07 Line-to-line voltage UG12	INT	•			
6	AnalogInput08 Line-to-line voltage UG23	INT	•			
10	AnalogInput09 Line-to-line voltage UG31	INT	•			
18	AnalogInput10 Phase voltage UG1	INT	•			

Register	Description	Data type	Read		Write	
			Cyclic	Acyclic	Cyclic	Acyclic
22	AnalogInput11 Phase voltage UG2	INT	•			
26	AnalogInput12 Phase voltage UG3	INT	•			
14	AnalogInput22 Voltage average UG12, UG23, UG31	INT	•			
174	AnalogInput19 Total active power filtered P/P_H1	INT	•			
178	AnalogInput20 Total reactive power filtered Q/Q_H1	INT	•			
182	AnalogInput21 Total apparent power filtered Q/S_H1	INT	•			
54	AnalogInput23 Power factor of generator/cos ϕ	INT	•			
50	AnalogInput24 Frequency of the generator network	UINT	•			
202	AnalogInput45 Instantaneous value of phase voltage UG1	UINT	•			
206	AnalogInput46 Instantaneous value of phase voltage UG2	UINT	•			
210	AnalogInput47 Instantaneous value of phase voltage UG3	UINT	•			
214	AnalogInput48 Instantaneous value of phase current I1	UINT	•			
218	AnalogInput49 Instantaneous value of phase current I2	UINT	•			
222	AnalogInput50 Instantaneous value of phase current I3	UINT	•			
197	LifeCnt Counter for real-time values	SINT	•			
	Timestamp for generator voltages and currents					
772	AnalogInput38 Timestamp of positive zero crossing of phase voltage UG1	DINT	•			
780	AnalogInput39 Timestamp of positive zero crossing of phase voltage UG2	DINT	•			
788	AnalogInput40 Timestamp of positive zero crossing of phase voltage UG3	DINT	•			
796	AnalogInput41 Timestamp of positive zero crossing of phase current I1	DINT	•			
804	AnalogInput42 Timestamp of positive zero crossing of phase current I2	DINT	•			
812	AnalogInput43 Timestamp of positive zero crossing of phase current I3	DINT	•			
Generator monitoring functions - Communication						
3330	AnalogInput36 Reads the unbalanced load meter	UINT		•		
3334	AnalogInput37 Reads unbalanced load current I2	INT		•		
Measured values for busbar - Communication						
82	AnalogInput13 Line-to-line voltage of busbar UB12	INT	•			
86	AnalogInput14 Line-to-line voltage of busbar UB23	INT	•			
90	AnalogInput15 Line-to-line voltage of busbar UB31	INT	•			
94	AnalogInput16 Phase voltage of bus bar UB1	INT	•			
98	AnalogInput17 Phase voltage of bus bar UB2	INT	•			
102	AnalogInput18 Phase voltage of bus bar UB3	INT	•			
106	AnalogInput35 Frequency of busbar	UINT	•			
Measured values for synchronization networks (for network configuration "Synchronization network 1 / Synchronization network 2") - Communication						
114	AnalogInput25 Line-to-line voltage of synchronization network 1 US1	INT	•			
134	AnalogInput26 Line-to-line voltage of synchronization network 2 US2	INT	•			
138	AnalogInput27 Frequency of synchronization network 1	UINT	•			
142	AnalogInput28 Frequency of synchronization network 2	UINT	•			
Measured values for network (for network configuration "3-phase network") - Communication						
114	AnalogInput25 Line-to-line voltage of network UN12	INT	•			
118	AnalogInput31 Line-to-line voltage of network UN23	INT	•			

Register	Description	Data type	Read		Write	
			Cyclic	Acyclic	Cyclic	Acyclic
122	AnalogInput32 Line-to-line voltage of network UN31	INT	•			
126	AnalogInput33 Phase voltage of network UN1	INT	•			
130	AnalogInput34 Phase voltage of network UN2	INT	•			
134	AnalogInput26 Phase voltage of network UN3	INT	•			
138	AnalogInput27 Network frequency	UINT	•			
Synchronization - Communication						
146	AnalogInput29 Differential angle between synchronization networks	INT	•			
150	AnalogInput30 Differential voltage between synchronization networks	INT	•			

1) This configuration register has a dual design. The register with "Read" in the name allows the configured value to be read back.

19.3.1 Using the module on the bus controller

Function model 254 "Bus controller" is used by default only by non-configurable bus controllers. All other bus controllers can use other registers and functions depending on the fieldbus used.

For detailed information, see section "Additional information - Using I/O modules on the bus controller" in the X20 user's manual (version 3.50 or later).

19.4 Configuration registers

19.4.1 General registers

19.4.1.1 Mains settings

Name:
ConfigOutput68
ConfigOutput68Read

This register is used to configure the module on the connected mains.

The value of this register can be read back.

Data type	Values
UINT	See the bit structure.

Bit structure:

Bit	Description	Value	Information
0 - 1	Generator mains configuration	00	3-phase network with neutral conductor
		01	3-phase mains without neutral conductor
		10 to 11	Reserved
2 - 3	Busbar configuration	00	3-phase network with neutral conductor
		01	3-phase mains without neutral conductor
		10 to 11	Reserved
4 - 5	Mains configuration	00	3-phase network with neutral conductor
		01	3-phase mains without neutral conductor
		10	Synchronization network 1 / Synchronization network 2
		11	Reserved
6 - 7	Reserved	0	
8 - 9	Generator mains ground	00	No phases grounded
		01	L1 grounded
		10	L2 grounded
		11	L3 grounded
10 - 11	Busbar ground	00	No phases grounded
		01	L1 grounded
		10	L2 grounded
		11	L3 grounded
12 - 13	Grounding of synchronization network 1	00	No phases grounded
		01	L1 grounded
		10	L2 grounded
		11	L3 grounded
14 - 15	Grounding of synchronization network 2	00	No phases grounded
		01	L1 grounded
		10	L2 grounded
		11	L3 grounded

Mains without neutral conductor

If configured as "3-phase mains without neutral conductor", the potential of the neutral conductor is calculated from the 3 phases ("virtual neutral point").

The phase voltages are then measured in relation to this "virtual neutral point".

Mains with ground

If one of the phases of a mains system is grounded, then it must be configured as such. Otherwise, it is possible that the module will report a phase failure that blocks the mains synchronization function.

Monitoring functions disabled:

- Phase failure monitoring is not carried out for the phase configured as "grounded".
- Phase sequence monitoring is not performed on 2-phase mains that are grounded.

Mains configuration

The mains can be used as two 2-phase synchronization mains or combined into a 3-phase mains.

If the mains configuration is set to "3-phase mains" then the monitoring functions will be enabled for these combined mains.

19.4.1.2 Nominal voltage range, nominal current range and Aron circuit

Name:
ConfigOutput20
ConfigOutput20Read

The value of this register can be read back.

Data type	Values
USINT	See the bit structure.

Bit structure:

Bit	Description	Value	Information
0	Nominal voltage range of generator mains	0	Voltage 100 V
		1	Voltage 400 V
1	Nominal voltage range of busbar	0	Voltage 100 V
		1	Voltage 400 V
2	Nominal voltage range of synchronization network 1	0	Voltage 100 V
		1	Voltage 400 V
3	Nominal voltage range of synchronization network 2	0	Voltage 100 V
		1	Voltage 400 V
4	Nominal current range of the generator mains	0	Current range 1 A
		1	Current range 5 A
5	Switch to power measurement principle of Aron circuit	0	Aron circuit disabled: Three-phase supply with neutral line
		1	Aron circuit enabled: Three-phase supply without neutral line
6 - 7	Reserved	0	

19.4.1.3 Nominal frequency (f_{Nom})

Name:
ConfigOutput10
ConfigOutput10Read

This is needed for converting the percentages based on this nominal value into physical units.

The value of this register can be read back.

Data type	Value	Information	Resolution
UINT	4800 to 6200	corresponds to 48 to 62 Hz.	0.01 Hz

19.4.1.4 General configuration register

Name:
ConfigOutput24
ConfigOutput24Read

The value of this register can be read back.

Data type	Values
USINT	See the bit structure.

Bit structure:

Bit	Description	Value	Information
0 - 1	DO5 function	00	DO5 is freely available to the user
		01	Monitoring output of the mains
		10	DO5 is freely available to the user or can be used as a mains monitoring output (the two signals are linked with an OR)
		11	Reserved
2 - 3	DO6 function	00	DO6 is freely available to the user
		01	Synchronization output (control of power switch)
		10 to 11	Reserved
4	Definition of rotational direction monitoring of all mains	0	Right rotating field
		1	Left rotating field
5 - 6	DO1 function	00	Monitoring output of the generator
		01	DO1 is freely available to the user.
		10	DO1 is freely available to the user or can be used as a monitoring output of the generator (both signals are linked logically by an OR operator).
		11	Reserved
7	Reserved	0	

19.4.1.5 Trigger bits

Name:
ConfigOutput23
ConfigOutput23Read

The value of this register can be read back.

Data type	Values
USINT	See the bit structure.

Bit structure:

Bit	Description	Value	Information
0	Reset unbalanced load meter	0	Unbalanced load meter not set to 0
		1	On rising edge: Unbalanced load meter set to 0
1 - 7	Reserved	0	

19.4.2 Generator mains

19.4.2.1 Nominal voltage of generator mains (U_{NomGen})

Name:
ConfigOutput02
ConfigOutput02Read

This is needed for converting the percentages based on this nominal value into physical units.

The value of this register can be read back.

Data type	Value	Information	Resolution
UINT	70 to 65000	Corresponds to 70 to 65000 V	1 V

19.4.2.2 Multiplier for generator mains

Name:
ConfigOutput06
ConfigOutput06Read

This is used for converting the measured value into a physical value. The multiplier is applied to the respective input value.

The value 100 corresponds to a multiplication factor of 1 (measured value not changed).

The value of this register can be read back.

Data type	Value	Information	Resolution
UINT	1 to 65535	Corresponds to 0.01 to 655.35	0.01

19.4.2.3 Nominal current of generator mains (I_{Nom})

Name:
ConfigOutput04
ConfigOutput04Read

This is needed for converting the percentages based on this nominal value into physical units.

The value of this register can be read back.

Data type	Value	Information	Resolution
UINT	0 to 65000	Corresponds to 0 to 65000 A	1 A

19.4.2.4 Multiplier for current transformer

Name:
ConfigOutput09
ConfigOutput09Read

This is used for converting the measured value into a physical value. The multiplier is applied to the respective input value.

The value of this register can be read back.

Data type	Value	Information	Resolution
UINT	1 to 65535	Corresponds to 1 to 65535	1

19.4.2.5 Turns generator mains functions on/off

Name:
ConfigOutput21
ConfigOutput21Read

The value of this register can be read back.

Data type	Values
USINT	See the bit structure.

Bit structure:

Bit	Description	Value	Information
0	Error acknowledgment mode	0	Error bits are reset by the module
		1	Error bits are reset by the user
2 - 3	Check all overvoltages and undervoltages[1)]	00	3 phase voltages
		01	3 line-to-line voltages
		10	3 line-to-line and 3 phase voltages
		11	Reserved
4	Reserved	0	
5	Enables extended range for Unbalanced load constant (K2)[2)]	0	Range 0.08 to 0.15
		1	Range 0.08 to 0.35
6	Power measurement mode	0	Total output - Including the harmonic component
		1	Fundamental power - 1st harmonic only
7	Disable evaluation of current zero crossings in the event of voltage loss[3)]	0	Current zero crossings are evaluated in the event of voltage loss (default).
		1	Current zero crossings are ignored in the event of voltage loss.

1) For the configuration of limit values, see "Generator monitoring" on page 35.
2) This parameter is supported starting with upgrade 1.4.1.0 (firmware version 1.06).
3) This parameter is supported starting with upgrade 1.3.0.0 (firmware version 1.05).

Power measurement mode

In real transmission networks, neither the voltages nor the currents are strictly sinusoidal. This means: The fundamental frequencies are generally subject to strong harmonics.

By default, the module always accounts for the contributions of the fundamental frequency as well as the harmonics. In addition to the voltage and current measured values, this also affects the power measurements.

When controlling with reactive power in applications, the part of the reactive power coming from the harmonic frequencies (distortion reactive power) can have negative effects. Only the displacement reactive power should be controlled (i.e. the reactive power component of the fundamental frequency). In particular, this can make a control to displacement reactive power = 0 (cos φ = 1) impossible.

This is why the module offers the possibility of accounting for only the fundamental frequency (1st harmonic) for power measurement, when necessary. This primarily serves to filter out the distortion reactive power. However, all other measured values associated with the power measurement as well as the corresponding generator protection functions are affected when re-configuring the power measurement to the fundamental frequency.

The voltage and current measured values from the generator mains are **not** affected. Just as before (as with the other voltage supply systems), they also always include the contribution of harmonics regardless of the mode being used for power measurement.

Measured value / Functionality	Corresponding data point	Corresponding output	Remarks/Details
Active power	AnalogInput19		P → P_H1
Reactive power	AnalogInput20		Q → Q_H1
Apparent power	AnalogInput21		S → S_H1
Power factor	AnalogInput23		Power factor -> cos φ |cos φ| = cos(arctan(Q_H1/P_H1)) The signs for cos φ are described in section "Generator operating modes" on page 21. "I" and "U" must be replaced by the respective 1st harmonics "I_H1" and "U_H1".
Maximum total active power	ConfigOutput52		Changing the parameter "Power measurement mode" during runtime has no immediate effect on any of these registers or the internal energy meters (e.g. meter reset). It only determines the summands or comparison value that is effective immediately (total output / fundamental frequency power).
Active energy meter for supply	ConfigOutput54		
Reactive energy meter for supply	ConfigOutput55		
Active energy meter for reference	ConfigOutput71		
Reactive energy meter for reference	ConfigOutput72		
Energy meter output		DO 2	
Generator monitoring function: Capacitive reactive power	StatusInput10	DO 1	
Generator monitoring function: Generator overload	StatusInput31	DO 1	
Generator monitoring function: Generator feedback	StatusInput32	DO 1	

Disable evaluation of current zero crossings in the event of voltage loss

If this setting is off, the current zero crossings are used for the internal calculations of the generator values instead of the voltage zero crossings in the event of voltage loss on the generator input.

If this setting is enabled, the current zero crossings are ignored in the event of voltage loss on the generator input. This means that in the event of voltage loss (e.g. if no generator is connected), generator values are no longer calculated due to possible noise on the current inputs.

19.4.2.6 Low-pass filter for total power ratings

Name:
ConfigOutput41
ConfigOutput41Read

Parameter for delay time of the low-pass filter of the total power values P, Q and S or P_H1, Q_H1 and S_H1 (see "Power measurement mode" on page 34). The maximum total power values are recorded independently of this without being filtered.

This parameter is used as a delay element so that current or voltage fluctuations have less effect on how the calculated power values are represented. The damping behavior of the low-pass filter acts in accordance with the configurable time constant of a decaying e-function.

The value of this register can be read back.

Data type	Value	Information	Resolution
UINT	0 to 300	Corresponds to 0 to 300 ms	1 ms

19.4.2.7 Filter cycles for real-time values

Name:
ConfigOutput125
ConfigOutput125Read

This register influences the pre-filtering of the instantaneous values for generator voltage and current in the module. When using task classes that are a multiple of the X2X cycle, the cutoff frequency of the pre-filter must be adjusted to avoid aliasing the instantaneous values.

This is done by specifying the task cycle time as a multiple of the X2X cycle time. If the calculated total value (i.e. Pre-filter time * X2X cycle time) exceeds 64.77 ms, it is limited to this.

The value of this register can be read back.

Data type	Values	Information	Resolution
UINT	1 to 2000	Corresponds to 1 to 2000 X2X cycles	1 cycle

19.4.3 Generator monitoring

19.4.3.1 Overvoltage limit of generator mains (Umax)

Name:
ConfigOutput16 (1st value)
ConfigOutput118 (2nd value)
ConfigOutput16Read (1st value)
ConfigOutput118Read (2nd value)

If the value of one of the generator voltages configured in the "ConfigOutput21" on page 34 register exceeds the value set here, then the "Overvoltage" error message (register "StatusInputPacked01" on page 70) or "Overvoltage2" (register "StatusInputPacked05" on page 73) is indicated after the delay time has expired and, if configured, the DO1 monitoring relay is switched.

The values of these registers can be read back.

Data type	Value	Information	Resolution
UINT	0 to 2000	Corresponds to 0 to 200% of U_{NomGen}	0.1%

19.4.3.2 Response time for generator overvoltage (U_{max})

Name:
ConfigOutput26 (1st time)
ConfigOutput119 (2nd time)
ConfigOutput26Read (1st time)
ConfigOutput119Read (2nd time)

The error is only triggered if the response value is exceeded in the positive direction without interruption for as long as is specified in this register. A response time of up to 80 s can be configured for a monitor.

The values of these registers can be read back.

Data type	Value	Information	Resolution
UINT	5 to 100 5 to 800	Corresponds to 0.5 to 10 s Corresponds to 0.5 to 80 s	0.1 s

19.4.3.3 Undervoltage limit of generator mains (U_{min})

Name:
ConfigOutput27 (1st value)
ConfigOutput59 (2nd value)
ConfigOutput27Read (1st value)
ConfigOutput59Read (2nd value)

If the value of one of the generator voltages configured in the "ConfigOutput21" on page 34 register falls below the value set here, then the "Undervoltage" or "Undervoltage2" error message (register "StatusInputPacked01" on page 70) is indicated after the delay time has passed and, if configured, the DO1 monitoring relay is switched.

The values of these registers can be read back.

Data type	Value	Information	Resolution
UINT	0 to 2000	Corresponds to 0 to 200% of U_{NomGen}	0.1%

19.4.3.4 Response time for generator undervoltage (U_{min})

Name:
ConfigOutput28 (1st time)
ConfigOutput65 (2nd time)
ConfigOutput28Read (1st time)
ConfigOutput65Read (2nd time)

The error is only triggered if the response value is exceeded in the negative direction without interruption for as long as is specified in this register. A response time of up to 80 s can be configured for a monitor.

The values of these registers can be read back.

Data type	Value	Information	Resolution
UINT	5 to 100 5 to 800	Corresponds to 0.5 to 10 s Corresponds to 0.5 to 80 s	0.1 s

19.4.3.5 Generator over-frequency (f_{max})

Name:
ConfigOutput29 (1st frequency)
ConfigOutput122 (2nd frequency)
ConfigOutput29Read (1st frequency)
ConfigOutput122Read (2nd frequency)

If the value of the generator frequency exceeds the percent value set here in relation to the nominal frequency, then the error message "Overfrequency" (register "StatusInputPacked01" on page 70) or "Overfrequency 2" (register "StatusPacked05" on page 73) is indicated after the delay time has passed and, if configured, the DO1 monitoring relay is switched.

The values of these registers can be read back.

Data type	Value	Information	Resolution
UINT	0 to 2000	For 0 to 200% of f_{Nom}	0.1%

19.4.3.6 Response time for generator over-frequency (f_{max})

Name:
ConfigOutput30 (1st time)
ConfigOutput123 (2nd time)
ConfigOutput30Read (1st time)
ConfigOutput123Read (2nd time)

The error is only triggered if the response value is exceeded in the positive direction without interruption for as long as is specified in this register.

The values of these registers can be read back.

Data type	Value	Information	Resolution
UINT	5 to 100	For 0.5 for 10 s	0.1 s

19.4.3.7 Generator under-frequency (f_{min})

Name:
ConfigOutput31 (1st frequency)
ConfigOutput120 (2nd frequency)
ConfigOutput31Read (1st frequency)
ConfigOutput120Read (2nd frequency)

If the value of the generator frequency falls below the percent value set here in relation to the nominal frequency, then the error message "Underfrequency" (register "StatusInputPacked01" on page 70) or "Underfrequency 2" (register "StatusInputPacked05" on page 73) is indicated after the delay time has passed and, if configured, the DO1 monitoring relay is switched.

The values of these registers can be read back.

Data type	Value	Information	Resolution
UINT	0 to 2000	For 0 to 200% of f_{Nom}	0.1%

19.4.3.8 Response time for generator under-frequency (f_{min})

Name:
ConfigOutput32 (1st time)
ConfigOutput121 (2nd time)
ConfigOutput32Read (1st time)
ConfigOutput121Read (2nd time)

The error is only triggered if the response value is exceeded in the negative direction without interruption for as long as is specified in this register.

The values of these registers can be read back.

Data type	Value	Information	Resolution
UINT	5 to 100	For 0.5 to 10 s	0.1 s

19.4.3.9 Generator voltage asymmetry (U_{as})

Name:
ConfigOutput33
ConfigOutput33Read

This trigger value, specified as a percentage, is based on the nominal voltage of the generator. If the difference between the three line-to-line voltages of the generator mains exceeds the configured limit value, then the error message "Voltage asymmetry" is indicated (register "StatusInputPacked01" on page 70) after the delay time has passed and, if configured, the DO1 monitoring relay is switched.

For this to happen, only one of these voltages has to exceed the respective limit value (in either the positive or negative direction).

The value of this register can be read back.

Data type	Value	Information	Resolution
UINT	0 to 300	For 0 to 30% of U_{NomGen}	0.1%

19.4.3.10 Response time for generator voltage asymmetry (U_{as})

Name:
ConfigOutput34
ConfigOutput34Read

This error is triggered only if the response value is exceeded without interruption (in either the positive or negative direction) for as long as is specified in this register.

The value of this register can be read back.

Data type	Value	Information	Resolution
UINT	5 to 100	For 0.5 to 10 s	0.1 s

19.4.3.11 Load time constant for current asymmetry (K1)

Name:
ConfigOutput35
ConfigOutput35Read

The dependent delayed unbalanced load monitoring function (see "Dependent delayed unbalanced load monitoring" on page 38) continually monitors the AC currents coming from the main current converters and continually calculates the present unbalanced load current. This is compared with the threshold value, which is calculated using the load time constants. If this threshold value is exceeded, the error message "Current asymmetry" is indicated (register "StatusInputPacked01" on page 70) and, if configured, the DO1 monitoring relay is switched.

The value of this register can be read back.

Data type	Value	Information	Resolution
UINT	1 to 65535	For 0.1 to 6553.5 s	0.1 s

19.4.3.12 Unbalanced load constant (K2)

Name:
ConfigOutput109
ConfigOutput109Read

The boundary between continuous operation and short-term operation is defined by the unbalanced load constant K2 (see "Dependent delayed unbalanced load monitoring" on page 38).

The value of this register can be read back.

Data type	Value	Information	Resolution
UINT	8 to 15 8 to 35	For 0.08 to 0.15 For 0.08 to 0.35[1)]	0.01

1) The extended range is supported starting with upgrade 1.4.1.0 (firmware version 1.06).
For range switching, see register "Turns generator mains functions on/off" on page 34.

Dependent delayed unbalanced load monitoring

Unbalanced load monitoring protects against unbalanced load in three-phase generators and three-phase mains. Parameters can be changed to make it possible to match the trigger characteristics to different generator types while taking their special thermal time constants into consideration.

An unbalanced load can be caused by uneven current distribution in the mains due to unbalanced load, asymmetrical short circuits, line interruptions or switching operations. Unbalanced loads result in reverse system currents in the stator, which causes harmonics with an uneven ordinal number in the stator winding and harmonics with an even ordinal number in the rotor winding. The rotor is at particular risk here because the harmonic waves place an additional load on the rotor winding and induce eddy currents in the rotor's solid iron, which may melt the metal or destroy the metallic structure.

An unbalanced load can be permissible within certain limits, however, when accounting for the thermal load limit of the generator. To avoid premature failure of the generator when an unbalanced load occurs, the characteristics that trigger unbalanced load protection should be adapted to the thermal characteristics of the generator. Unbalanced load protection can also be triggered by external errors in the mains caused by asymmetric short circuits.

When unbalanced load protection is tripped can be calculated using the following formula:

Operating mode	Formula
Short-term operation	$t = \frac{K1}{(\frac{I_2}{I_{Nom}})^2 - K2^2}$
Continuous operation	$\frac{I_2}{I_{Nom}} \leq K2 \rightarrow t = \infty$

Key	
t	Calculated tripping time
K1	Valid load time constant for the generator [s]
K2	Unbalanced load constant
I_2	Calculated inverse current / unbalanced load current [A]
I_{Nom}	Nominal current for the generator [A]

To calculate the tripping time instant, the scan duration of the measurement system (i.e. 20 ms for 50 Hz voltage) is divided by the calculated trigger time, and the results are continually added up. With short-term operation, the value of the summands increases; with continuous operation, it decreases. If the summand reaches the value 1 (100%), then the max. permitted value has been reached. The summand is limited between 0 and 1.

The boundary between continuous operation and short-term operation is defined by the unbalanced load constant K2.

Information:

When the generator is at a standstill, the summand is neither reset nor is its value reduced.

Limiting unbalanced load currents >360% I_{Nom}

This limiting is performed starting with upgrade 1.3.0.0 (firmware version 1.05).

For unbalanced load currents of $I_2/I_{Nom} \leq 3.6$, the tripping instant is calculated normally.

For unbalanced load currents of $I_2/I_{Nom} > 3.6$, a ratio of $I_2/I_{Nom} = 3.6$ is used to calculate the tripping instant.

19.4.3.13 Nominal current on generator mains for unbalanced load protection

Name:
ConfigOutput124
ConfigOutput124Read

The nominal current for unbalanced load protection can be set separately. If the value is set to 0, the normal nominal current is used for calculations.

The value of this register can be read back.

Data type	Value	Information	Resolution
UINT	0 to 65000	For 0 to 65000 A	1 A

19.4.3.14 Maximum limit of neutral conductor current

Name:
ConfigOutput36
ConfigOutput36Read

Configurable limit for the neutral conductor current. If the value is exceeded, then the error message "Maximum neutral conductor current" is indicated (register "StatusInputPacked01" on page 70) after the delay time has passed and, if configured, the DO1 monitoring relay is switched.

The value of this register can be read back.

Data type	Value	Information	Resolution
UINT	0 to 1000	For 0 to 100% of I_{Nom}	0.1%

19.4.3.15 Response time for neutral conductor current monitor

Name:
ConfigOutput37
ConfigOutput37Read

The error is only triggered if the response value is exceeded in the positive direction without interruption for as long as is specified in this register.

The value of this register can be read back.

Data type	Value	Information	Resolution
UINT	5 to 100	For 0.5 to 10 s	0.1 s

19.4.3.16 Short circuit current

Name:
ConfigOutput38
ConfigOutput38Read

If the value of the generator current exceeds the percentage based on the converter's nominal current set here, then the error message "Short circuit current" is indicated (register "StatusInputPacked01" on page 70) and, if configured, the DO1 monitoring relay is switched.

The value of this register can be read back.

Data type	Value	Information	Resolution
UINT	1000 to 5000	For 100 to 500% of I_{Nom}	0.1%

19.4.3.17 Response time for short circuit current

Name:
ConfigOutput39
ConfigOutput39Read

The error is only triggered if the response value is exceeded in the positive direction without interruption for as long as is specified in this register.

The value of this register can be read back.

Data type	Value	Information	Resolution
UINT	4 to 500	For 0.04 to 5 s	0.01 s

19.4.3.18 Dependent overcurrent

Name:
ConfigOutput42
ConfigOutput42Read

The response value percentage is based on the nominal current of the generator. If the response value is exceeded, then error message "Dependent overcurrent" is indicated (register "StatusInputPacked01" on page 70) and, if configured, monitoring relay DO1 is switched.

The value of this register can be read back.

Data type	Value	Information	Resolution
UINT	1000 to 2000	For 100 to 200% of I_{Nom}	0.1%

Dependent overcurrent monitoring

A generator that is operated at its nominal current I_{Nom} normally reaches about half of its maximum thermal load. Operating it above the rated current I_{Nom} result in additional warming, which is permitted until the maximum temperature is reached. The highest permissible continuous temperature is determined by the class of the insulation material used in the generator.

Based on the settings and the current measurement, the device forms an internal model based on an I^2t characteristic curve of the generator temperature. This allows the heat capacity of the generator to be completely utilized for short overloads while at the same time providing full protection. The configurable parameters for determining the machine model include the nominal current I_{Nom} of the generator and the time multiplier.

19.4.3.19 Time factor setting (iths) for dependent overcurrent

Name:
ConfigOutput43
ConfigOutput43Read

Time factor setting iths is needed to calculate the "Tripping characteristic for dependent overcurrent" on page 43.

The value of this register can be read back.

Data type	Value	Information	Resolution
UINT	1 to 20	For 0.1 to 2	0.1

19.4.3.20 Capacitive reactive power

Name:
ConfigOutput44
ConfigOutput44Read

The capacitive reactive power for the generator is monitored to determine if it falls below the defined response value. In this way, monitoring the capacitive reactive power can be used to detect exciter failure. If the response value is fallen below, then the error message "Capacitive reactive power" is indicated (register "StatusInputPacked01" on page 70) after the delay time has passed and, if configured, the DO1 monitoring relay is switched.

Depending on how the "Power measurement mode" parameter is set in the "ConfigOutput21" on page 34 register, either the total reactive power or the fundamental frequency reactive power (displacement reactive power) is compared with the response value.

The value of this register can be read back.

Data type	Value	Information	Resolution
INT	-32768 to 32767	For -32768 to 32767 kvar	1 kvar

19.4.3.21 Response time for reactive power monitoring

Name:
ConfigOutput45
ConfigOutput45Read

The error is only triggered if the response value is exceeded in the positive direction without interruption for as long as is specified in this register.

The value of this register can be read back.

Data type	Value	Information	Resolution
UINT	5 to 100	For 0.5 to 10 s	0.1 s

19.4.3.22 Generator overload

Name:
ConfigOutput89
ConfigOutput89Read

If the value of the active power of the generator exceeds the percentage of the generator's nominal power set here, then the error message "Generator overload" is indicated (register "StatusInputPacked01" on page 70) after the delay time has passed and, if configured, the DO1 monitoring relay is switched.

Depending on how the "Power measurement mode" parameter is set in the "ConfigOutput21" on page 34 register, either the total active power or the fundamental frequency active power is compared with the response value.

The nominal power is calculated as follows:

$P_{NomGen} = U_{NomGen} * I_{NomGen} * \sqrt{3}$

The value of this register can be read back.

Data type	Value	Information	Resolution
UINT	0 to 2000	For 0 to 200% of P_{NomGen}	0.1%

19.4.3.23 Response time for generator overload

Name:
ConfigOutput90
ConfigOutput90Read

The error is only triggered if the response value is exceeded in the positive direction without interruption for as long as is specified in this register.

The value of this register can be read back.

Data type	Value	Information	Resolution
UINT	5 to 100	For 0.5 to 10 s	0.1 s

19.4.3.24 Generator feedback

Name:
ConfigOutput91
ConfigOutput91Read

If the value of the negative generator active power undershoots the percentage value set here in relation to the nominal power of the generator, error message "generator feedback" is indicated after the time delay has elapsed (register "StatusInputPacked01" on page 70) and monitoring relay DO1 is switched, if configured.

Depending on how the "Power measurement mode" parameter is set in the "ConfigOutput21" on page 34 register, either the total active power or the fundamental frequency active power is compared with the response value.

The nominal power is calculated as follows:

$P_{NomGen} = U_{NomGen} * I_{NomGen} * \sqrt{3}$

The value of this register can be read back.

Data type	Value	Information	Resolution
UINT	0 to 2000	0 to 200% of P_{NomGen}	0.1%

19.4.3.25 Response time for generator feedback

Name:
ConfigOutput92
ConfigOutput92Read

The error is only triggered if the response value is exceeded in the negative direction without interruption for as long as is specified in this register.

The values of this register can be read back.

Data type	Value	Information	Resolution
UINT	5 to 100	For 0.5 to 10 s	0.1 s

19.4.3.26 Tripping characteristic for dependent overcurrent

Name:
ConfigOutput136
ConfigOutput136Read

To calculate the tripping instant, the sampling duration of the measurement system is divided by the calculated tripping time (t). The results are continually added up. If the summand reaches the value 1 (100%), then the maximum permissible value has been reached. The summand is limited between 0 and 1.

The value of this register can be read back.

Data type	Values	Information
UINT	0	Normally inverse (default)
	1	Very inverse
	2	Extremely inverse

Depending on the setting, the tripping characteristic is calculated for a constant overcurrent according to the corresponding formula:

Normally inverse $$t = \frac{0.14}{\left(\frac{I}{I_N}\right)^{0.02} - 1} * iths$$

Very inverse $$t = \frac{13.5}{\left(\frac{I}{I_N}\right) - 1} * iths$$

Extremely inverse $$t = \frac{80}{\left(\frac{I}{I_N}\right)^{2} - 1} * iths$$

Legend:

t	Tripping time [s]
I	The highest value of the 3 phase currents [A]
I_N	Setpoint [A]
iths	Time factor setting

Time factor setting iths can be set via register "ConfigOutput43" on page 41.

The monitor function can be reset by restarting the module or by falling below the overcurrent value so that the results of the continuous addition decrease according to the formula.

Tripping characteristic per EN 60255-151:2009 section 4.4.1.3 (normally inverse)

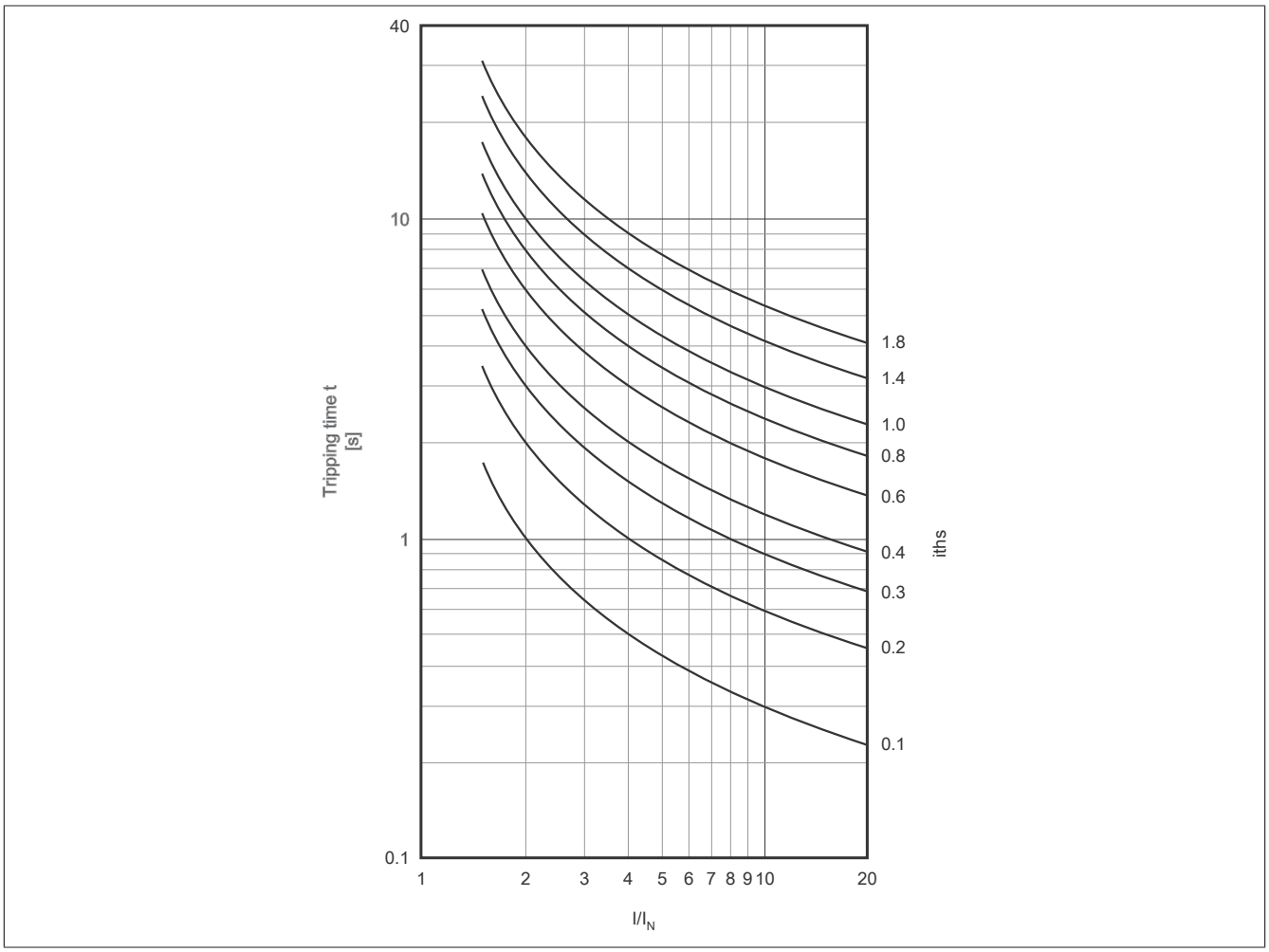

Tripping characteristic per EN 60255-151:2009 section 4.4.1.3 (very inverse)

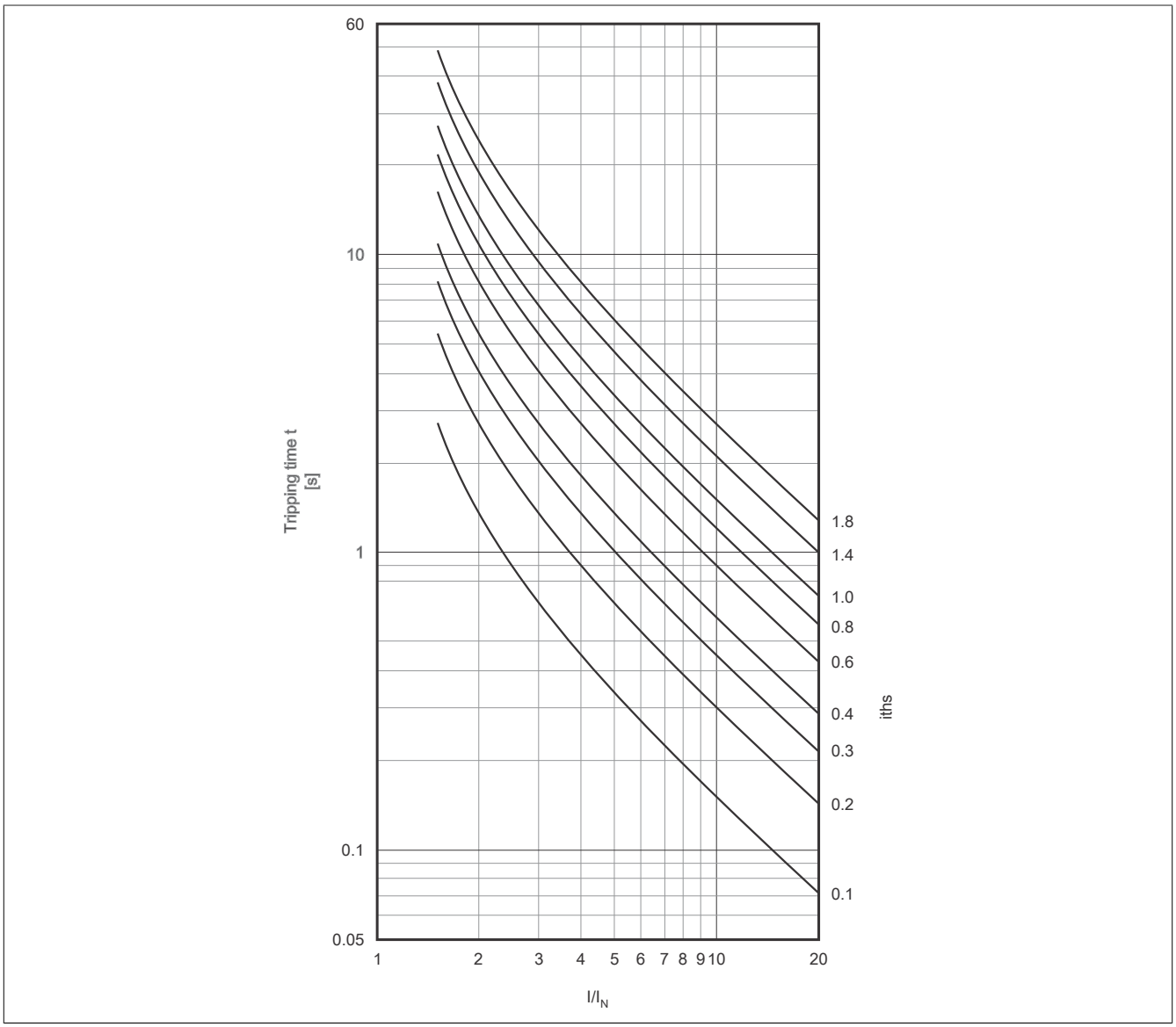

Tripping characteristic per EN 60255-151:2009 section 4.4.1.3 (extremely inverse)

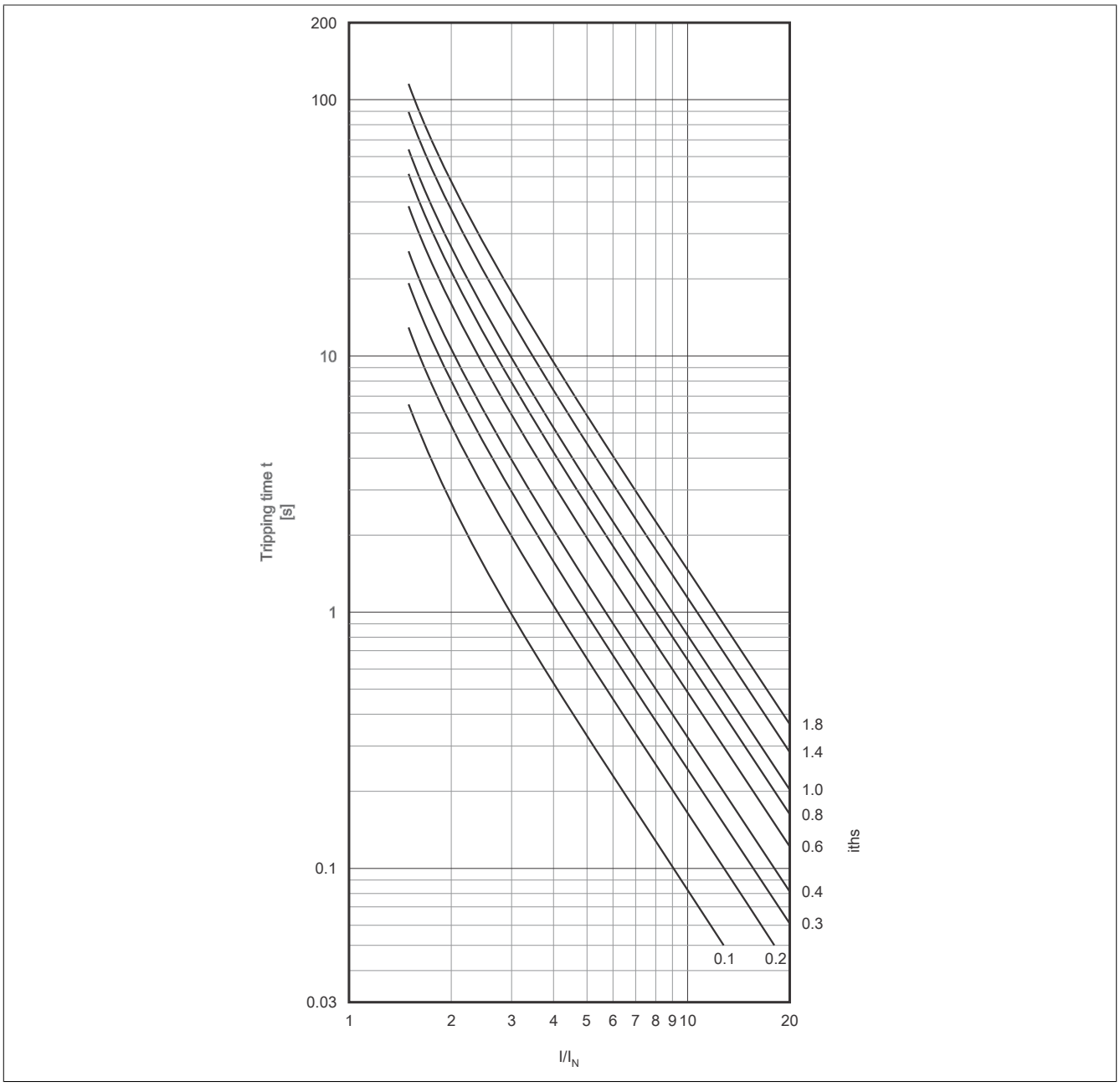

19.4.3.27 DO1 function

This digital output can be set after the defined response time has elapsed depending on the assignment of the generator mains' monitoring variables (X3). Assignments are made using the "ConfigOutput57" on page 47 and "ConfigOutput97" on page 48 registers.

The monitoring variables can be assigned to this input either individually or with additional monitoring variables using an OR connective. This makes it possible to set the relay when there are multiple monitoring variables.

19.4.3.27.1 Assigning monitoring functions - 1

Name:
ConfigOutput57
ConfigOutput57Read

The following monitoring functions can be assigned to the monitoring relay using this register:

The value of this register can be read back.

Data type	Values
UINT	See the bit structure.

Bit structure:

Bit	Description	Value	Information
0	Overvoltage (of a phase)	0	Do not assign function
		1	Assign function
1	Undervoltage (of a phase)	0	Do not assign function
		1	Assign function
2	Overfrequency	0	Do not assign function
		1	Assign function
3	Underfrequency	0	Do not assign function
		1	Assign function
4	Voltage asymmetry	0	Do not assign function
		1	Assign function
5	Current asymmetry (unbalanced load)	0	Do not assign function
		1	Assign function
6	Neutral conductor current, maximum	0	Do not assign function
		1	Assign function
7	Short circuit current	0	Do not assign function
		1	Assign function
8	Dependent overcurrent	0	Do not assign function
		1	Assign function
9	Capacitive reactive power (exciter failure)	0	Do not assign function
		1	Assign function
10	Ready	0	Do not assign function
		1	Assign function
11	Generator overload	0	Do not assign function
		1	Assign function
12	Generator feedback	0	Do not assign function
		1	Assign function
13 - 14	Reserved	0	
15	Undervoltage 2 (one phase)	0	Do not assign function
		1	Assign function

Information:

The minimum pulse duration when addressing a monitoring function on the error bit via X2X as well as on the relay is 500 ms.

19.4.3.27.2 Assigning monitoring functions - 2

Name:
ConfigOutput97

The following additional monitoring functions can be assigned to the monitoring relay using this register:

The value of this register can be read back.

Data type	Values
UINT	See the bit structure.

Bit structure:

Bit	Description	Value	Information
0	Overvoltage 2 (one phase)	0	Do not assign function
		1	Assign function
1	Underfrequency 2	0	Do not assign function
		1	Assign function
2	Overfrequency 2	0	Do not assign function
		1	Assign function
3	Q-U protection	0	Do not assign function
		1	Assign function
4 - 15	Reserved	0	

Information:

The minimum pulse duration when addressing a monitoring function on the error bit via X2X as well as on the relay is 500 ms.

19.4.3.28 Q-U protection

Name:
ConfigOutput126
ConfigOutput126Read

If all generator voltages configured in register "ConfigOutput21" on page 34 undershoot the value set here and inductive reactive power is simultaneously absorbed (active power P < 0 and reactive power Q < 0), if configured, error message "Q-U protection" is indicated in register "StatusInputPacked05" on page 73 and monitoring relay DO1 is switched after the time delay has expired.

The values of these registers can be read back.

Data type	Values	Information	Resolution
UINT	0 to 2000	Corresponds to 0 to 200% of the nominal voltage	0.1%

19.4.3.29 Response time for Q-U protection

Name:
ConfigOutput127
ConfigOutput127Read

Response time for triggering Q-U protection. For more information, see "Q-U protection" on page 48.

The value of this register can be read back.

Data type	Values	Information	Resolution
UINT	1 to 100	Corresponds to 0.1 to 10 s	0.1 s

19.4.4 Synchronization mains

(for network configuration "Synchronization network 1 / Synchronization network 2")

19.4.4.1 Nominal voltage of synchronization mains (U_{NomSyn})

Name:
ConfigOutput01
ConfigOutput01Read

This is needed for converting the percentages based on this nominal value into physical units.

The value of this register can be read back.

Data type	Value	Information	Resolution
UINT	70 to 65000	For 70 to 65000 V	1 V

19.4.4.2 Multiplier for synchronization mains

Name:
ConfigOutput07 (mains 1)
ConfigOutput08 (mains 2)
ConfigOutput07Read (mains 1)
ConfigOutput08Read (mains 2)

This is used for converting the measured value into a physical value. The multiplier is applied to the respective input value.

100 means a multiplier factor of 1 (measured value not changed).

The value of this register can be read back.

Data type	Value	Information	Resolution
UINT	1 to 65535	For 0.01 to 655.35	0.01

19.4.5 Mains

Mains (for mains configuration "3-phase mains")

19.4.5.1 Nominal voltage of mains ($U_{NomMains}$)

Name:
ConfigOutput01
ConfigOutput01Read

This is needed for converting the percentages based on this nominal value into physical units.

The value of this register can be read back.

Data type	Value	Information	Resolution
UINT	70 to 65000	For 70 to 65000 V	1 V

19.4.5.2 Multiplier for mains

Name:
ConfigOutput07
ConfigOutput07Read

This is used for converting the measured value into a physical value. The multiplier is applied to the respective input value.

100 means a multiplier factor of 1 (measured value not changed).

The value of this register can be read back.

Data type	Value	Information	Resolution
UINT	1 to 65535	For 0.01 to 655.35	0.01

19.4.5.3 Enable/disable mains functions

Name:
ConfigOutput22
ConfigOutput22Read

The value of this register can be read back.

Data type	Values
USINT	See the bit structure.

Bit structure:

Bit	Description	Value	Information
0	Error acknowledgment mode	0	Mains error bits are reset by the module
		1	Mains error bits are reset by the user
1	Phase shift measurement	0	Three-phase only
		1	Single- or three-phase
2 - 3	Check all overvoltages and undervoltages[1)]	00	3 phase voltages
		01	3 line-to-line voltages
		10	3 line-to-line and 3 phase voltages
		11	Reserved
4	Configuration of undervoltage monitoring	0	2-point mode
		1	6-point mode
5 - 7	Reserved	0	

1) For information about configuring limit values, see "Mains voltage monitoring" on page 51.

19.4.6 Mains monitoring functions

(for "3-phase mains" configuration)

The following mains monitoring functions are available if the network configuration is set to a 3-phase mains (see register "Mains settings" on page 31).

19.4.6.1 Mains voltage monitoring

19.4.6.1.1 Overvoltage limit of the mains ($U_{maxMains}$)

Name:
ConfigOutput73 (1st value)
ConfigOutput98 (2nd value)
ConfigOutput73Read (1st value)
ConfigOutput98Read (2nd value)

If the value of one of the mains voltages configured in the "ConfigOutput22" on page 50 register exceeds the value set here, then the "Overvoltage" error message (register "StatusInputPacked02" on page 71) or "Overvoltage 2" (register "StatusInputPacked04" on page 72) is indicated after the delay time has expired and, if configured, the DO5 monitoring relay is switched.

The values of these registers can be read back.

Data type	Value	Information	Resolution
UINT	0 to 2000	For 0 to 200% of $U_{NomMains}$	0.1%

19.4.6.1.2 Mains overvoltage dropout threshold

Name:
ConfigOutput128 (1st value)
ConfigOutput130 (2nd value)
ConfigOutput128Read (1st value)
ConfigOutput130Read (2nd value)

If the dropout threshold is undershot within the response time after the overvoltage limit value has been overshot by a mains voltage, the monitor is not triggered and the response time starts again from the beginning when the overvoltage limit value is overshot again. If values are selected for the dropout threshold that are greater than or equal to the overvoltage limit value, then the dropout threshold is disabled.

The values of these registers can be read back.

Data type	Values	Information	Resolution
UINT	0 to 2000	Corresponds to 0 to 200% of the nominal voltage	0.1%

19.4.6.1.3 Response time for mains overvoltage ($U_{MaxMains}$)

Name:
ConfigOutput82 (1st time)
ConfigOutput99 (2nd time)
ConfigOutput82Read (1st time)
ConfigOutput99Read (2nd time)

The error is only triggered if the response value is exceeded in the positive direction without interruption for as long as is specified in this register.

The values of these registers can be read back.

Data type	Value	Information	Resolution
UINT	5 to 60000	For 0.005 to 60 s	0.001 s

19.4.6.1.4 Mains over-frequency ($f_{maxMains}$)

Name:
ConfigOutput75 (1st frequency)
ConfigOutput102 (2nd frequency)
ConfigOutput75Read (1st frequency)
ConfigOutput102Read (2nd frequency)

If the value of the mains frequency exceeds the percent value set here in relation to the nominal frequency, then the error message "Overfrequency" (register "StatusInputPacked02" on page 71) or "Overfrequency 2" (register "StatusInputPacked04" on page 72) is indicated after the delay time has passed and, if configured, the DO5 monitoring relay is switched.

The values of these registers can be read back.

Data type	Value	Information	Resolution
UINT	0 to 2000	For 0 to 200% of f_{Nom}	0.1%

19.4.6.1.5 Overfrequency dropout threshold

Name:
ConfigOutput132 (1st value)
ConfigOutput134 (2nd value)
ConfigOutput132Read (1st value)
ConfigOutput134Read (2nd value)

If the dropout threshold is undershot within the response time after the overfrequency limit value has been overshot by a mains voltage, the monitor is not triggered and the response time starts again from the beginning when the overfrequency limit value is overshot again. If values are selected for the dropout threshold that are greater than or equal to the overfrequency limit value, then the dropout threshold is disabled.

The values of these registers can be read back.

Data type	Values	Information	Resolution
UINT	0 to 2000	Corresponds to 0 to 200% of the rated frequency	0.1%

19.4.6.1.6 Response time for mains over-frequency ($f_{maxMains}$)

Name:
ConfigOutput84 (1st time)
ConfigOutput103 (2nd time)
ConfigOutput84Read (1st time)
ConfigOutput103Read (2nd time)

The error is only triggered if the response value is exceeded in the positive direction without interruption for as long as is specified in this register.

The values of these registers can be read back.

Data type	Value	Information	Resolution
UINT	5 to 60000	For 0.005 to 60 s	0.001 s

19.4.6.1.7 Mains under-frequency ($f_{minMains}$)

Name:
ConfigOutput76 (1st frequency)
ConfigOutput104 (2nd frequency)
ConfigOutput76Read (1st frequency)
ConfigOutput104Read (2nd frequency)

If the value of the mains frequency falls below the percent value set here in relation to the nominal frequency, then the error message "Underfrequency" (register "StatusInputPacked02" on page 71) or "Underfrequency 2" (register "StatusInputPacked04" on page 72) is indicated after the delay time has passed and, if configured, the DO5 monitoring relay is switched.

The values of these registers can be read back.

Data type	Value	Information	Resolution
UINT	0 to 2000	For 0 to 200% of f_{Nom}	0.1%

19.4.6.1.8 Underfrequency dropout threshold

Name:
ConfigOutput133 (1st value)
ConfigOutput135 (2nd value)
ConfigOutput133Read (1st value)
ConfigOutput135Read (2nd value)

If the dropout threshold is overshot within the response time after the underfrequency limit value has been undershot by a mains voltage, the monitor is not triggered and the response time starts again from the beginning when the underfrequency limit value is undershot again. If values are selected for the dropout threshold that are less than or equal to the underfrequency limit value, then the dropout threshold is disabled.

The values of these registers can be read back.

Data type	Values	Information	Resolution
UINT	0 to 2000	Corresponds to 0 to 200% of the rated frequency	0.1%

19.4.6.1.9 Response time for mains under-frequency ($f_{minMains}$)

Name:
ConfigOutput85 (1st time)
ConfigOutput105 (2nd time)
ConfigOutput85Read (1st time)
ConfigOutput105Read (2nd time)

The error is only triggered if the response value is exceeded in the negative direction without interruption for as long as is specified in this register.

The values of these registers can be read back.

Data type	Value	Information	Resolution
UINT	5 to 60000	For 0.005 to 60 s	0.001 s

19.4.6.1.10 Mains voltage asymmetry ($U_{asMains}$)

Name:
ConfigOutput77
ConfigOutput77Read

This trigger value, specified as a percentage, is based on the nominal voltage of the mains. If the difference between the 3 line-to-line voltages of the mains exceeds the configured limit value, then the error message "Voltage asymmetry" is indicated (register "StatusInputPacked02" on page 71) after the delay time has passed and, if configured, the DO5 monitoring relay is switched.

For this to happen, only one of these voltages has to exceed the respective limit value (in either the positive or negative direction).

The value of this register can be read back.

Data type	Value	Information	Resolution
UINT	0 to 300	For 0 to 30% of $U_{NomMains}$	0.1%

19.4.6.1.11 Response time for the mains voltage asymmetry ($U_{asMains}$)

Name:
ConfigOutput86
ConfigOutput86Read

This error is triggered only if the response value is exceeded without interruption (in either the positive or negative direction) for as long as is specified in this register.

The value of this register can be read back.

Data type	Value	Information	Resolution
UINT	5 to 100	For 0.005 to 0.1 s	0.001 s

19.4.6.2 Undervoltage monitoring in 2-point mode

2 independent limit values and response times can be defined for undervoltage monitoring.

19.4.6.2.1 Undervoltage limit 1 of the network (U_{minNet})

Name:
ConfigOutput74
ConfigOutput74Read

If the value of one of the mains voltages configured in the "ConfigOutput22" on page 50 register falls below the value set here, then the "Undervoltage" error message (register "StatusInputPacked02" on page 71) is indicated after the delay time has passed and, if configured, the DO5 monitoring relay is switched.

The value of this register can be read back.

Data type	Value	Information	Resolution
UINT	0 to 2000	For 0 to 200% of $U_{NomMains}$	0.1%

19.4.6.2.2 Mains undervoltage dropout threshold

Name:
ConfigOutput129 (1st value)
ConfigOutput131 (2nd value)
ConfigOutput129Read (1st value)
ConfigOutput131Read (2nd value)

If the dropout threshold is overshot within the response time after the undervoltage limit value has been undershot by a mains voltage, the monitor is not triggered and the response time starts again from the beginning when the undervoltage limit value is undershot again. If values are selected for the dropout threshold that are less than or equal to the undervoltage limit value, then the dropout threshold is disabled.

The values of these registers can be read back.

Data type	Values	Information	Resolution
UINT	0 to 2000	Corresponds to 0 to 200% of the nominal voltage	0.1%

19.4.6.2.3 Response time for mains undervoltage ($U_{minMains}$)

Name:
ConfigOutput83 (1st time)
ConfigOutput101 (2nd time)
ConfigOutput83Read (1st time)
ConfigOutput101Read (2nd time)

The error is only triggered if the response value is exceeded in the negative direction without interruption for as long as is specified in this register.

The values of these registers can be read back.

Data type	Value	Information	Resolution
UINT	5 to 60000	For 0.005 to 60 s	0.001 s

19.4.6.2.4 Undervoltage limit 2 of the mains ($U_{minMains}$)

Name:
ConfigOutput100
ConfigOutput100Read

If the value of one of the linked mains voltages falls below the value set here, then the "Undervoltage" error message (register "StatusInputPacked02" on page 71) is indicated after the delay time has passed and, if configured, the DO5 monitoring relay is switched.

The value of this register can be read back.

Data type	Value	Information	Resolution
UINT	0 to 2000	0 to 200% of $U_{NomMains}$	0.1%

19.4.6.3 Undervoltage monitoring in 6-point mode

It is possible to define up to 6 limit values and response times for undervoltage monitoring. If not all 6 points are required, the unused limit values and response times must be set to 0.
It is important to note that the specified limit value and response time for each point must be greater than or equal to the previous point (P1 ≤ P2 ≤ P3, etc.).

The defined points are used to create a limit value curve. If the voltage drops below the curve and a response time has expired, the error message "Undervoltage" is signaled ("StatusInputPacked02" on page 71 register). If configured, the D05 monitoring relay is also switched.

A faulty undervoltage monitoring configuration also triggers the "Undervoltage" error message, and monitor relay DO5 is switched if configured to do so (e.g. P1 > P2 and P2 not equal to (0% / 0 ms)).

The types of voltages to be monitored are specified in the mains configuration ("ConfigOutput22" on page 50 register):

- Line-to-line voltages
- Phase voltages
- Line-to-line and phase voltages

As soon as one of the monitored voltages drops below the limit curve, the corresponding time counter begins counting. The time counter is reset when all voltages are once again equal to or higher than the defined value.

The "Undervoltage" error message is generated when one of the time counters crosses over the limit curve.

19.4.6.3.1 Example 1 with 3 points:

In this example, 3 limit values are defined, along with the corresponding response times:

- P1 (70% / 150 ms)
- P2 (70% / 700 ms)
- P3 (90% / 1500 ms)
- P4 (0% / 0 ms)
- P5 (0% / 0 ms)
- P6 (0% / 0 ms)

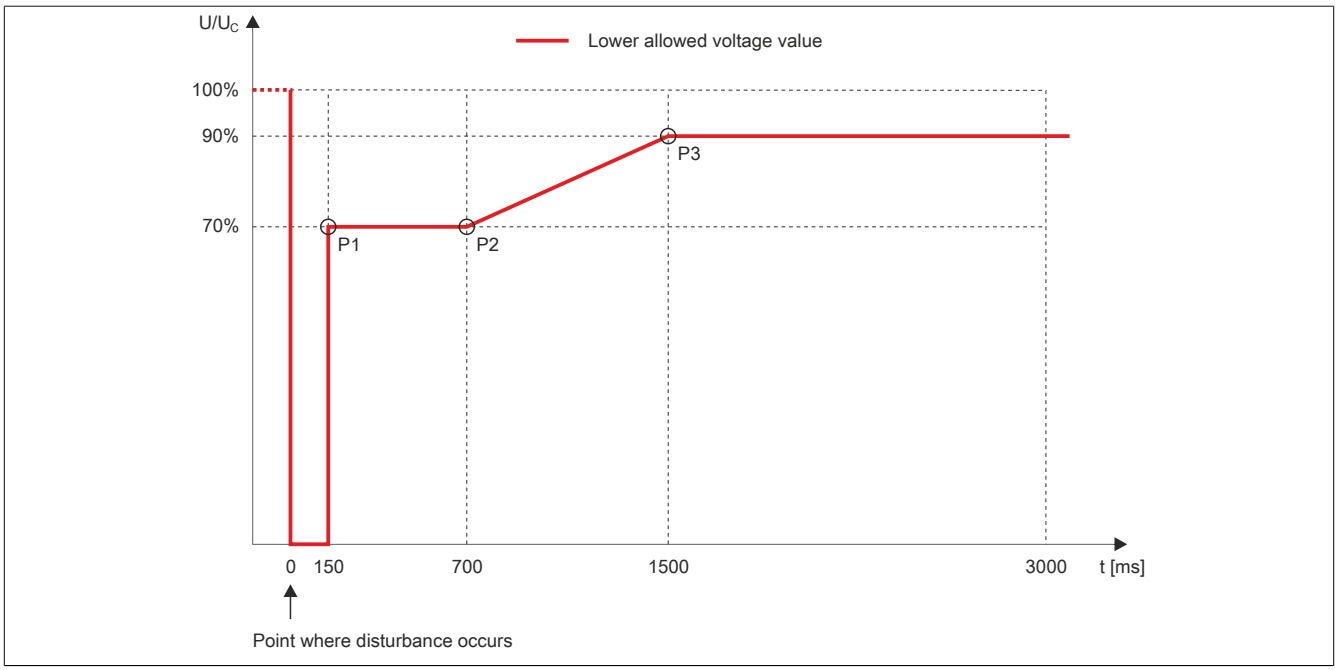

Notes regarding limit curve

- The red line marks the lowest permitted value for monitored voltages.
- If 2 consecutive points have the same limit value, then the response time of the first point is applied. In the example above, this situation is shown with points 1 and 2.
- Between points 2 and 3 the curve has a positive linear slope. If one of the monitored voltages drops in this area, the module calculates the appropriate response time.

Determining the response time

1) Find voltage value on Y axis
2) Locate intersection on curve
3) Read the response time on the X axis

19.4.6.3.2 Example 2 with 4 points:

In this example, 4 limit values are defined, along with the corresponding response times:

- P1 (30% / 150 ms)
- P2 (70% / 700 ms)
- P3 (70% / 1500 ms)
- P4 (90% / 1500 ms)
- P5 (0% / 0 ms)
- P6 (0% / 0 ms)

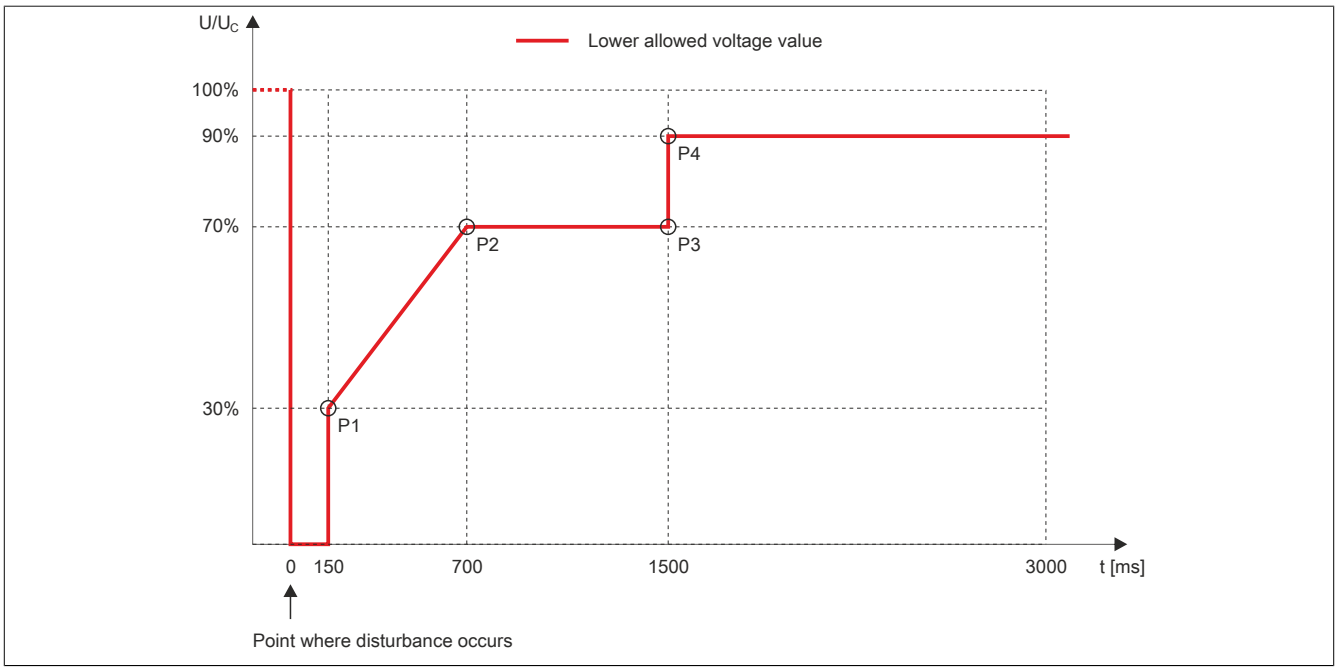

Notes regarding limit curve

- The red line marks the lowest permitted value for monitored voltages.
- Between points 1 and 2 the curve has a positive linear slope. If one of the monitored voltages drops in this area, the module calculates the appropriate response time.
- If 2 consecutive points have the same limit value, then the response time of the first point is applied. In the example, this situation is shown with points 2 and 3.
- Points 1 and 2 are connected directly by a line with a positive slope. To avoid a direct connection between points 2 and 4, one would have to define another point between them with the same limit as point 2 and the same response time as point 4. In this case, that is point 3.

Determining the response time

1) Find voltage value on Y axis
2) Locate intersection on curve
3) Read the response time on the X axis

19.4.6.3.3 Undervoltage limit of the microgrid ($U_{MinMains}$)

Name:
ConfigOutput74 (1st mains)
ConfigOutput100 (2nd mains)
ConfigOutput110 (3rd mains)
ConfigOutput112 (4th mains)
ConfigOutput114 (5th mains)
ConfigOutput116 (6th mains)
ConfigOutput74Read (1st mains)
ConfigOutput100Read (2nd mains)
ConfigOutput110Read (3rd mains)
ConfigOutput112Read (4th mains)
ConfigOutput114Read (5th mains)
ConfigOutput115Read (6th mains)

The values of these registers can be read back.

Data type	Value	Information	Resolution
UINT	0 to 2000	0 to 200% of $U_{NomMains}$	0.1%

19.4.6.3.4 Response time for mains undervoltage ($U_{minMains}$)

Name:
ConfigOutput83 (1st mains)
ConfigOutput101 (2nd mains)
ConfigOutput111 (3rd mains)
ConfigOutput113 (4th mains)
ConfigOutput115 (5th mains)
ConfigOutput117 (6th mains)
ConfigOutput83Read (1st mains)
ConfigOutput101Read (2nd mains)
ConfigOutput111Read (3rd mains)
ConfigOutput113Read (4th mains)
ConfigOutput115Read (5th mains)
ConfigOutput117Read (6th mains)

The values of these registers can be read back.

Data type	Value	Information	Resolution
UINT	5 to 60000	For 0.005 to 60 s	0.001 s

19.4.6.4 Microgrid monitoring

A microgrid is a small mains power grid that only supplies a limited area and generally is not connected to other mains grids, which means it can function autonomously. This is in contrast to a synchronous grid, in which multiple smaller mains grids are connected together and synchronized.

With microgrid monitoring, the mains is monitored for over/undervoltage. After a defined response time elapses, a corresponding error message is generated. Microgrid monitoring always checks the line-to-line voltages independently of the configuration in the "ConfigOutput22" on page 50 register.

19.4.6.4.1 Overvoltage limit of the mains ($U_{maxMains}$)

Name:
ConfigOutput106
ConfigOutput106Read

If the value of one of the linked mains voltages exceeds the value set here, then the "Microgrid monitoring" error message (register "StatusInputPacked04" on page 72) is indicated after the delay time has passed and, if configured, the DO5 monitoring relay is switched.

The value of this register can be read back.

Data type	Value	Information	Resolution
UINT	0 to 2000	0 to 200% of $U_{NomMains}$	0.1%

19.4.6.4.2 Undervoltage limit of the mains ($U_{minMains}$)

Name:
ConfigOutput107
ConfigOutput107Read

If the value of one of the linked mains voltages falls below the value set here, then the "Microgrid monitoring" error message (register "StatusInputPacked04" on page 72) is indicated after the delay time has passed and, if configured, the DO5 monitoring relay is switched.

The value of this register can be read back.

Data type	Value	Information	Resolution
UINT	0 to 2000	For 0 to 200% of $U_{NomMains}$	0.1%

19.4.6.4.3 Response time for microgrid limit

Name:
ConfigOutput108
ConfigOutput108Read

An error is triggered only if the response value is exceeded without interruption (in either the positive or negative direction) for as long as is specified in this register.

The value of this register can be read back.

Data type	Value	Information	Resolution
UINT	5 to 200	For 0.005 to 0.2 s	0.001 s

19.4.6.5 Phase shift monitoring

A phase shift is an abrupt change to the voltage curve that can be caused by a significant change to the load.

In this case, the device recognizes a single change to the period duration. This changed period duration is compared with the calculated average value from past measurements. Monitoring takes place for three phases and if desired also for a single phase. The phase shift monitoring function is only active if the mains voltage is higher than the set percentage value based on the nominal voltage for the converter.

If the response value is exceeded, the error message "Phase shift" is indicated (register "StatusInputPacked02" on page 71) and, if configured, the DO5 monitoring relay is switched.

19.4.6.5.1 Phase shift monitoring response time

A phase shift is indicated on output DO5 within 2 ms after detection of the phase shift (i.e. after zero crossing of the extended/shortened period), as long as this is configured accordingly.

19.4.6.5.2 Phase shift detection

Phase shift detection is configured in the "ConfigOutput22" on page 50 register.

Type of monitoring	Description
Only three-phase monitoring	Triggering takes place if the limit value for three-phase monitoring was exceeded on all 3 phases within 2 periods.
Single-phase or three-phase monitoring	Triggering takes place: • If the limit value for single-phase monitoring is exceeded on at least one of the 3 phases • If the limit value for three-phase monitoring was exceeded on all 3 phases within 2 periods.

Phase shift monitoring detects an abrupt change to the period duration of the mains voltage.

The period duration of the current period is compared with the average value for the period duration over the past 4 periods. If the difference exceeds the set limit value, then triggering takes place immediately.

Limit value

Setting of the limit value takes place in 0.1° steps. The internal limit value in µs is calculated as follows:

t_{hres}[µs] = t_{hres}[0.1°] * Period duration / 3600

When do this, the period duration for the set nominal frequency is used.

Example

Calculating t_{hres} [µs] at 50 Hz (period duration = 20000 µs) and limit value 7°:

t_{hres}[µs] = 70 * 20000 µs / 3600 = 388.88 µs (rounded to 389 µs)

If the period duration thus changes abruptly by more than +389 µs, triggering takes place.

19.4.6.5.3 Maximum phase difference for a single phase

Name:
ConfigOutput78
ConfigOutput78Read

Triggering occurs if the electrical angle of the voltage curve shifts by more than the set angle on at least one phase.

The value of this register can be read back.

Data type	Value	Information	Resolution
UINT	0 to 990	For 0 to 99°	0.1°

19.4.6.5.4 Maximum phase difference for three phases

Name:
ConfigOutput79
ConfigOutput79Read

Triggering occurs if the electrical angle of the voltage curve shifts by more than the set angle on all 3 phases.

The value of this register can be read back.

Data type	Value	Information	Resolution
UINT	0 to 990	For 0 to 99°	0.1°

19.4.6.5.5 Minimum voltage for phase shift monitoring

Name:
ConfigOutput88
ConfigOutput88Read

A minimum voltage can be set. Phase shift monitoring is only active if the voltage on all 3 phases exceeds this value.

The value of this register can be read back.

Data type	Value	Information	Resolution
UINT	0 to 2000	For 0 to 200% of $U_{NomMains}$	0.1%

19.4.6.6 Network frequency change

19.4.6.6.1 Response value for mains frequency change (df/dt)

Name:
ConfigOutput80
ConfigOutput80Read

For df/dt monitoring, the frequency change in each period is compared to the previous period.

If this value exceeds the configured limit value in each of the periods for the specified number of periods and the sign for the frequency change is always the same, the error message "Df/dt (mains frequency change)" is indicated (register "StatusInputPacked02" on page 71)and, if configured, the DO5 monitoring relay is switched.

The value of this register can be read back.

Data type	Value	Information	Resolution
UINT	0 to 1000	For 0 to 100 Hz/s	0.1 Hz/s

19.4.6.6.2 Number of periods for mains frequency change (df/dt)

Name:
ConfigOutput87
ConfigOutput87Read

This register is used to define the number of periods for monitoring the mains frequency change. For activation, the response value must be continually exceeded at least for as many periods as specified in this register. The display of the error message on output DO5 takes place max. 2 ms after internal detection.

The value of this register can be read back.

Example

The maximum tripping time at 4 periods and 50 Hz mains frequency is calculated as follows:

Max. tripping time = 4 x 20 ms + 2 ms = 82 ms

The change in period duration caused by the frequency gradients must also be accounted for.

Data type	Value	Information	Resolution
UINT	1 to 250	-	-

19.4.6.7 DO5 function

19.4.6.7.1 Assigning monitoring functions

Name:
ConfigOutput81
ConfigOutput81Read

This digital output can be set after the defined response time has elapsed depending on the assignment of the mains' monitoring variables.

The monitoring variables can be assigned to this input either individually or with additional monitoring variables using an OR operator. This makes it possible to set the output when there are multiple monitoring variables.

The following table is an overview of the monitoring functions that can be assigned to the monitoring output.

The value of this register can be read back.

Data type	Values
UINT	See the bit structure.

Bit structure:

Bit	Description	Value	Error notification
0	Overvoltage (of a phase)	0	Do not assign function
		1	Assign function
1	Undervoltage (of a phase)	0	Do not assign function
		1	Assign function
2	Overfrequency	0	Do not assign function
		1	Assign function
3	Underfrequency	0	Do not assign function
		1	Assign function
4	Voltage asymmetry	0	Do not assign function
		1	Assign function
5	Phase shift - 1-/3-phase	0	Do not assign function
		1	Assign function
6	Df/dt exceeded	0	Do not assign function
		1	Assign function
7	Undervoltage 2 (of a phase)	0	Do not assign function
		1	Assign function
8	Overvoltage 2 (of a phase)	0	Do not assign function
		1	Assign function
9	Underfrequency 2	0	Do not assign function
		1	Assign function
10	Overfrequency 2	0	Do not assign function
		1	Assign function
11	Microgrid monitoring	0	Do not assign function
		1	Assign function
12 - 15	Reserved	-	

Information:

The minimum pulse duration when a monitoring function responds to both the fault bit via X2X as well as on the output is 500 ms.

19.4.7 Busbar

19.4.7.1 Busbar nominal voltage (U_{NomBus})

Name:
ConfigOutput03
ConfigOutput03Read

This is needed for converting the percentages based on this nominal value into physical units.

The value of this register can be read back.

Data type	Value	Information	Resolution
UINT	70 to 65000	For 70 to 65000 V	1 V

19.4.7.2 Multiplier for busbar

Name:
ConfigOutput05
ConfigOutput05Read

This is used for converting the measured value into a physical value. The multiplier is applied to the respective input value.

100 thus means a multiplier factor of 1 (measured value not changed).

The value of this register can be read back.

Data type	Value	Information	Resolution
UINT	1 to 65535	For 0.01 to 655.35	0.01

19.4.7.3 Minimum busbar voltage (U_{Bmin})

Name:
ConfigOutput40
ConfigOutput40Read

Configurable threshold for zero voltage monitoring of the busbar based on the nominal voltage of the busbar. DO3 is set when the configured threshold is undershot.

The value of this register can be read back.

Data type	Value	Information	Resolution
UINT	0 to 1000	For 0 to 100% of U_{NomBus}	0.1%

19.4.8 Synchronization

19.4.8.1 Synchronization mode

Name:
ConfigOutputPacked01
ConfigOutput17 to ConfigOutput19

If multiple mode bits are set at the same time, then no mode will be selected (type BOOL).

Data type	Values
USINT	See the bit structure.

Bit structure:

Bit	Description	Value	Information
0	ConfigOutput17	0	Synchronization mode ≠ Slip
		1	Synchronization mode = Slip
1	ConfigOutput18	0	Synchronization mode ≠ Check
		1	Synchronization mode = Check
2	ConfigOutput19	0	Synchronization mode ≠ Dead bus
		1	Synchronization mode = Dead bus
3 - 7	Reserved	-	

19.4.8.2 Synchronization configuration

Name:
ConfigOutput56
ConfigOutput56Read

This register contains parameters for configuring which mains or voltages should be synchronized with each other.

The value of this register can be read back.

Data type	Values
UINT	See the bit structure.

Bit structure:

Bit	Description	Value	Information
0 - 1	Synchronization configuration (synchronization mains - mains being synchronized)	00	X4 - X6: Synchronization mains 1 - Synchronization mains 2 **Configuration X4 - X6 is only possible if configured for network configuration "Synchronization network 1 / Synchronization network 2" in register "ConfigOutput68" on page 31.**
		01	X4 - X5: Synchronization mains 1 - Busbar
		10	X4 - X3: Synchronization mains 1 - Generator
		11	X5 - X3: Busbar - Generator
2 - 7	Reserved	0	
8	Synchronization output	0	Digital output 4
		1	Digital output 6 - Output must be configured as a synchronization output (see register "ConfigOutput24" on page 32)
9 - 15	Reserved	0	

19.4.8.3 Max. differential frequency (df_{max})

Name:
ConfigOutput11
ConfigOutput11Read

A switch-on command on DO4 is only output if this configured differential frequency is not exceeded. This value specifies the upper frequency (positive value corresponds to positive slip → generator frequency is greater than the busbar frequency when synchronizing).

The value of this register can be read back.

Data type	Value	Information	Resolution
UINT	2 to 49	For 0.02 to 0.49 Hz	0.01 Hz

19.4.8.4 Min. differential frequency (df_{min})

Name:
ConfigOutput12
ConfigOutput12Read

A switch-on command on DO4 is only output if this configured differential frequency is not exceeded in the negative direction. This value specifies the lower frequency (negative value corresponds to negative slip → generator frequency is less than the busbar frequency when synchronizing).

The value of this register can be read back.

Data type	Value	Information	Resolution
INT	-49 to 0	For -0.49 to 0 Hz	0.01 Hz

19.4.8.5 Max. differential voltage (dU_{max})

Name:
ConfigOutput13
ConfigOutput13Read

A switch-on command on DO4 is only output if this configured differential voltage percentage based on the synchronization mains' nominal voltage is not exceeded.

The value of this register can be read back.

Data type	Value	Information	Resolution
UINT	1 to 300	For 0.1 to 30% of U_{NomSyn}	0.1%

19.4.8.6 Max. permitted differential angle (ϕ_{Max})

Name:
ConfigOutput14
ConfigOutput14Read

A switch-on command on DO4 is only output if the configured differential angle between the two synchronization mains is not exceeded.

The value of this register can be read back.

Data type	Value	Information	Resolution
UINT	1 to 600	For 0.1 to 60°	0.1°

19.4.8.7 Phase rotation of synchronization network 1 (dα)

Name:
ConfigOutput15
ConfigOutput15Read

This parameter is used for correcting any phase shifting from upstream transformer vector groups before reaching the mains being synchronized.

This parameter specifies how many degrees the synchronization mains lags behind the mains being synchronized.

The value of this register can be read back.

Data type	Value	Information	Resolution
UINT	0 to 3600	For 0 to 360°	0.1°

19.4.8.8 Pulse duration of the switch-on relay

Name:
ConfigOutput47 (DO4)
ConfigOutput95 (DO6)
ConfigOutput47Read (DO4)
ConfigOutput95Read (DO6)

The duration of the switch-on pulse can be adjusted for the following switching units.

The value of this register can be read back.

Data type	Values	Information	Resolution
UINT	40 to 1000	For 0.04 to 1 s	0.001 s

19.4.8.9 Switching response time of the power switch

Name:
ConfigOutput48 (DO4)
ConfigOutput96 (DO6)
ConfigOutput48Read (DO4)
ConfigOutput96Read (DO6)

The actuation time of the generator power switch corresponds to the lead time of the switch-on command. The switch-on command is executed before the point of synchronization according to the amount of time defined here.

The value of this register can be read back.

Data type	Value	Information	Resolution
UINT	40 to 300	For 0.04 to 0.3 s	0.001 s

19.4.8.10 Dead bus voltage ($U_{BminSync}$)

Name:
ConfigOutput58
ConfigOutput58Read

Configurable threshold for dead bus synchronization based on the nominal voltage of the busbar.

The value of this register can be read back.

Data type	Value	Information	Resolution
UINT	0 to 1000	For 0 to 100% of U_{NomBus}	0.1%

19.4.8.11 2-phase synchronization for commissioning tests

Name:
ConfigOutput93
ConfigOutput93Read

2-phase synchronization for commissioning tests.

The value of this register can be read back.

Data type	Values
UINT	See the bit structure.

Bit structure:

Bit	Description	Value	Information
0	Synchronization	0	3-phase synchronization (normal operation)
		1	2-phase synchronization with L1 and L2 (commissioning tests with 2-phase simulation design)
1 - 7	Reserved	0	

Information:

It is only possible to set 2-phase synchronization for commissioning tests with a 2-phase simulation design.

If only 2 phases are connected, then the respective mains must be configured with neutral conductors since a network with a "virtual neutral point" is not possible with 2 phases (see register "ConfigOutput68" on page 31).

19.4.9 Maximum value buffer and power meter

19.4.9.1 Pulse value of energy meter output

Name:
ConfigOutput46
ConfigOutput46Read

Output DO2 outputs pulses that occur at a frequency proportional to the measured energy. The frequency of the pulses can be specified. The length of the pulse is 400 ms. The frequency at which the pulses occur should be set so that the duration between two pulses does not exceed 400 ms at the highest possible power. The pulse output's internal meter starts at 0 kWh after a restart. This register has no effect on the "ConfigOutput54" on page 68 and "ConfigOutput55" on page 68 registers.

When set to 0, meter output is disabled.

Depending on how the "Power measurement mode" parameter is set in the "ConfigOutput21" on page 34 register, either the total active power or the active power of the fundamental wave is added together. Changing the parameter "Power measurement mode" during runtime does not cause the internal energy meter to restart.

The value of this register can be read back.

Data type	Value	Information	Resolution
UINT	0 to 65535	For 0 to 65535 kWh/pulse	1 kWh/pulse

19.4.9.2 Count value for active energy meter and reactive energy meter

Name:
ConfigOutput94
ConfigOutput94Read

This parameter is used to configure the resolution of active and reactive energy counters.

The value of this register can be read back.

Data type	Value	Information	Resolution
UINT	0 to 65,535	-	1 kWh

19.4.9.3 Maximum value buffer and meter buffer

These registers are used for nonvolatile storage of the maximum value and meter level values. After restarting, the stored maximum values and meter states are loaded back into their registers and the module's internal work meter is reset. It is possible to reset or write to the stored maximum values and meter states using an acyclic register.

The maximum values are recorded by the effective measured values before reaching the configurable filter. The maximum values can be read or written to as acyclic registers.

19.4.9.3.1 Maximum phase current

Name:
Reading: ConfigOutput49 (generator I1)
Reading: ConfigOutput50 (generator I2)
Reading: ConfigOutput51 (generator I3)
Writing: ConfigOutput60 (generator I1)
Writing: ConfigOutput61 (generator I2)
Writing: ConfigOutput62 (generator I3)

Data type	Value	Information	Resolution
INT	-32768 to 32767	-	1 A

19.4.9.3.2 Maximum total active power (supplied power)

Name:
Reading: ConfigOutput52
Writing: ConfigOutput63

Depending on the status of the "Power measurement mode" parameter in the "ConfigOutput21" on page 34 register, either the total power or the fundamental power is added together or compared.

Data type	Value	Information	Resolution
INT	-32768 to 32767	-	1 kW

19.4.9.3.3 Maximum neutral conductor current

Name:
Reading: ConfigOutput53
Writing: ConfigOutput64

Data type	Value	Information	Resolution
INT	-32768 to 32767	-	1 A

19.4.9.3.4 Active energy counter

Name:
Reading: ConfigOutput54 (delivered (producing))
Reading: ConfigOutput71 (drawn (consuming))
Writing: ConfigOutput66 (delivered (producing))
Writing: ConfigOutput69 (drawn (consuming))

Depending on the status of the "Power measurement mode" parameter in the "ConfigOutput21" on page 34 register, either the total power or the fundamental power is added together or compared.

The resolution can be configured (see register "ConfigOutput94" on page 67).

Data type	Value	Information	Resolution
DINT	-2,147,483,648 to 2,147,483,647	-	Default: 100 kWh

19.4.9.3.5 Reactive energy counter

Name:
Reading: ConfigOutput55 (reactive energy meter delivered (producing))
Reading: ConfigOutput72 (reactive energy meter drawn (consuming))
Writing: ConfigOutput67 (reactive energy meter delivered (producing))
Writing: ConfigOutput70 (reactive energy meter drawn (consuming))

Depending on the status of the "Power measurement mode" parameter in the "ConfigOutput21" on page 34 register, either the total power or the fundamental power is added together or compared.

The resolution can be configured (see register "ConfigOutput94" on page 67).

Data type	Value	Information	Resolution
DINT	-2,147,483,648 to 2,147,483,647	-	Default: 100 kvarh

19.5 Communication registers

19.5.1 General registers

19.5.1.1 Digital outputs 05 - 06 and various control bits

Name:
DigitalOutputPacked01
DigitalOutput05
DigitalOutput06
ResetGeneratorErrors
ResetMainsErrors
InvertDO5
DigitalOutput01

The module's default configuration is that the generator and mains error bits are reset by the module. If this should be done by the user, then the module needs to be configured accordingly using the following registers.

- Generator error: "ConfigOutput21" on page 34
- Network error: "ConfigOutput22" on page 50

(data point applied as BOOL)

Data type	Values
USINT	See the bit structure.

Bit structure:

Bit	Description	Value	Information
0	DigitalOutput05	0	Reset output 5
		1	Set output 5
1	DigitalOutput06	0	Reset output 6
		1	Set output 6
2	ResetGeneratorErrors	0	Does not reset generator error bits
		1	Resets generator error bits
3	ResetMainsErrors	0	Do not reset mains error bits
		1	Reset mains error bits
4	InvertDO5	0	Do not invert Output 5
		1	Invert output 5 of the mains monitoring function
5	DigitalOutput01	0	Reset output 1
		1	Set output 1
6 - 7	Reserved	0	

19.5.1.2 Status of digital outputs

Name:
StatusDigitalOutputPacked01
StatusDigitalOutput01 to StatusDigitalOutput06
StatusInput16 to StatusInput17

(data point applied as BOOL)

Data type	Values
USINT	See the bit structure.

Bit structure:

Bit	Description	Value	Information
0	StatusDigitalOutput01	0	Current state of output 1 = LOW
		1	Current state of output 1 = HIGH
...		...	
5	StatusDigitalOutput06	0	Current state of output 6 = LOW
		1	Current state of output 6 = HIGH
6	StatusInput17	0	Status DO OK
		1	Status DO overload
7	StatusInput16	0	Status 24 V output supply OK
		1	Status 24 V output supply undervoltage

19.5.1.3 Generator network error registers

Name:
StatusInputPacked01
StatusInput01 to StatusInput11
StatusInput31 to StatusInput32
StatusInput18

This register is the error register for the generator mains (error bits are of type BOOL). With regard to bits 9, 11 and 12, please also observe the description of the "Power measurement mode" parameter in the register "ConfigOutput21" on page 34.

Data type	Values
UINT	See the bit structure.

Bit structure:

Bit	Description	Value	Information
0	StatusInput01	0	Overvoltage (one phase), OK
		1	Overvoltage (one phase), present
1	StatusInput02	0	Undervoltage (one phase), OK
		1	Undervoltage (one phase), present
2	StatusInput03	0	Over-frequency, OK
		1	Over-frequency, present
3	StatusInput04	0	Under-frequency, OK
		1	Under-frequency, present
4	StatusInput05	0	Voltage asymmetry, OK
		1	Voltage asymmetry, present
5	StatusInput06	0	Current asymmetry, OK
		1	Current asymmetry, present
6	StatusInput07	0	Maximum neutral conductor current, OK
		1	Maximum neutral conductor current exceeded
7	StatusInput08	0	Short circuit-current, OK
		1	Short circuit-current, present
8	StatusInput09	0	Dependent overcurrent OK
		1	Dependent overcurrent occurring
9	StatusInput10	0	Capacitive reactive power (exciter failure), OK
		1	Capacitive reactive power (exciter failure), present
10	StatusInput11	0	Ready, OK
		1	Not ready
11	StatusInput31	0	No generator overload
		1	Generator overload
12	StatusInput32	0	No generator feedback
		1	Generator feedback
13 - 14	Reserved	-	
15	StatusInput18	0	Undervoltage 2 (of a phase) OK
		1	Undervoltage 2 (of a phase) occurring

StatusInput11

The error message "Not ready" is triggered if the X20 I/O supply drops below 18 VDC.

19.5.1.4 Power network error registers

Name:
StatusInputPacked02
StatusInput24 to StatusInput30
StatusInput33

This register is the error register for the mains (error bits are of type BOOL).

Data type	Values
USINT	See the bit structure.

Bit structure:

Bit	Description	Value	Information
0	StatusInput24	0	Overvoltage (one phase), OK
		1	Overvoltage (one phase), present
1	StatusInput25	0	Undervoltage (one phase), OK
		1	Undervoltage (one phase), present
2	StatusInput26	0	Over-frequency, OK
		1	Over-frequency, present
3	StatusInput27	0	Under-frequency, OK
		1	Under-frequency, present
4	StatusInput28	0	Voltage asymmetry, OK
		1	Voltage asymmetry, present
5	StatusInput29	0	Phase shift monitoring OK
		1	Phase shift error (1/3 of a phase)
6	StatusInput30	0	Df/dt OK
		1	Df/dt error
7	StatusInput33	0	Undervoltage 2 (of a phase) OK
		1	Undervoltage 2 (of a phase) occurring

StatusInput33

The data point is only valid if 2-point mode is configured (see register "ConfigOutput22" on page 50). This bit only appears in the I/O mapping in Automation Studio if the corresponding status information is enabled in the I/O configuration ("Mains configuration / Additional status information" menu option).

19.5.1.5 General error registers

Name:
StatusInputPacked03
StatusInput12 to StatusInput15
StatusInput19 to StatusInput23

This register is the error register for general error messages (error bits are of type BOOL).

Data type	Values
UINT	See the bit structure.

Bit structure:

Bit	Description	Value	Information
0	StatusInput12	0	All phases of the generator mains OK
		1	Failure of at least one phase of the generator mains
1	StatusInput13	0	All phases of the busbar OK
		1	Failure of at least one phase of the busbar
2	StatusInput14	0	All phases of synchronization network 1 OK
		1	Failure of at least one phase of synchronization network 1
3	StatusInput15	0	All phases of synchronization network 2 OK
		1	Failure of at least one phase of synchronization network 2
4	StatusInput19	0	Phase sequence of generator voltage OK
		1	Phase sequence of generator voltage incorrect
5	StatusInput20	0	Phase sequence of generator current OK
		1	Phase sequence of generator current incorrect
6	StatusInput21	0	Phase sequence of busbar OK
		1	Phase sequence of busbar incorrect
7	StatusInput22	0	Direction of rotation of synchronization network 1 OK
		1	Direction of rotation of synchronization network 1 incorrect
8	StatusInput23	0	Direction of rotation of synchronization network 2 OK
		1	Direction of rotation of synchronization network 2 incorrect
9 - 15	Reserved	-	

StatusInput12 to StatusInput15: Phase failure is detected if at least one of the phases of the respective terminal fails.

StatusInput19 to StatusInput23 are status bits for detecting a change of rotation.

19.5.1.6 Power network error registers (continued)

Name:
StatusInputPacked04
StatusInput34 to StatusInput37

This register is the error register for the mains (error bits are of type BOOL). These bits only appear in the I/O mapping in Automation Studio if the corresponding status information is enabled in the I/O configuration ("Mains configuration / Additional status information" menu option).

Data type	Values
UINT	See the bit structure.

Bit structure:

Bit	Description	Value	Information
0	StatusInput34	0	Overvoltage 2 (of a phase) OK
		1	Overvoltage 2 (of a phase) occurring
1	StatusInput35	0	Underfrequency 2 OK
		1	Underfrequency 2 occurring
2	StatusInput36	0	Overfrequency 2 OK
		1	Overfrequency 2 occurring
3	StatusInput37	0	Microgrid monitoring OK
		1	Microgrid monitoring tripped
4 - 15	Reserved	-	

19.5.1.7 Generator network error registers (continued)

Name:
StatusInputPacked05
StatusInput38 to StatusInput40

This register is the error register for the generator mains (error bits are of type BOOL). These bits only appear in the I/O mapping in Automation Studio if the corresponding status information is enabled in the I/O configuration ("Generator mains / Additional status information" menu option).

Data type	Values
UINT	See the bit structure.

Bit structure:

Bit	Description	Value	Information
0	StatusInput38	0	Overvoltage 2 (of a phase) OK
		1	Overvoltage 2 (of a phase) occurring
1	StatusInput39	0	Underfrequency 2 OK
		1	Underfrequency 2 occurring
2	StatusInput40	0	Overfrequency 2 OK
		1	Overfrequency 2 occurring
3	StatusInput41	0	Q-U protection OK
		1	Q-U protection active
4 - 15	Reserved	-	

19.5.2 Generator mains measured values

19.5.2.1 Phase currents of the generator

Name:
AnalogInput01 (I1)
AnalogInput02 (I2)
AnalogInput03 (I3)

Phase currents of the generator

Data type	Value	Information	Resolution
INT	-32768 to 32767	-	1 A

19.5.2.2 Neutral conductor current of generator I_n

Name:
AnalogInput05

Data type	Value	Information	Resolution
INT	-32768 to 32767	-	1 A

19.5.2.3 Current average of generator I1, I2, I3

Name:
AnalogInput04

Data type	Value	Information	Resolution
INT	-32768 to 32767	-	1 A

19.5.2.4 Dynamic current average of generator (I_{m_dyn})

Name:
AnalogInput06

Describes the change to the current average.

The dynamic average is the amount of change (I_{m_diff}) of the current average (sampling time: 10 ms).

This value decays in an e-function.

$I_{m_diff} > I_{m_dyn} \rightarrow I_{m_dyn} = I_{m_diff}$

$I_{m_diff} \leq I_{m_dyn} \rightarrow I_{m_dyn} = I_{m_dyn} * 0.98$

Data type	Value	Information	Resolution
UINT	0 to 65,535	-	1 A

19.5.2.5 Line-to-line voltages of the generator

Name:
AnalogInput07 (UG12)
AnalogInput08 (UG23)
AnalogInput09 (UG31)

Data type	Value	Information	Resolution
INT	-32768 to 32767	-	1 V

19.5.2.6 Phase voltages of the generator

Name:
AnalogInput10 (UG 1)
AnalogInput11 (UG 2)
AnalogInput12 (UG 3)

Data type	Value	Information	Resolution
INT	-32768 to 32767	-	1 V

19.5.2.7 Voltage average of the generator

Name:
AnalogInput22

Voltage average of the generator UG12, UG23, UG31 (U~3 average)

Data type	Value	Information	Resolution
INT	-32768 to 32767	-	1 V

19.5.2.8 Filtered generator power values:

Name:
AnalogInput19
AnalogInput20
AnalogInput21

Filtered generator power values:

- Total output (sum of all harmonic frequencies)
- Fundamental frequency power (_H1)

Configuration is explained in the "ConfigOutput21" on page 34 register.

Data type	Value	Information	Resolution
INT	-32768 to 32767	Total active power P/P_H1	1 kW
	-32768 to 32767	Total reactive power Q/Q_H1	1 kvar
	-32768 to 32767	Total apparent power S/S_H1	1 kVA

19.5.2.9 Power factor of generator/cos ϕ

Name:
AnalogInput23

The factor is described in "Power factor of the generator" on page 21 and register "ConfigOutput21" on page 34.

Data type	Value	Information	Resolution
INT	-32768 to 32767	-	0.001

19.5.2.10 Frequency of the generator mains

Name:
AnalogInput24

Data type	Value	Information	Resolution
UINT	0 to 65,535	-	0.01 Hz

19.5.2.11 Timestamp for generator voltages and currents

These timestamps mark the last positive zero crossing of the generator voltages (L1-N, L2-N, L3-N) and generator currents (I1, I2, I3). They can be used to calculate all the necessary phase ratios.

Calculation of the phase ratios and error handling for the calculations are to be implemented by the user (e.g. period duration monitoring or verification that the voltages are high enough, etc.).

These timestamps only appear in the I/O mapping in Automation Studio if they are enabled in the I/O configuration ("Enable timestamps for generator voltage and current" menu option).

19.5.2.11.1 Timestamp of positive zero crossing of the phase voltage

Name:
AnalogInput38 (UG1)
AnalogInput39 (UG2)
AnalogInput40 (UG3)

Time stamp of pos. zero crossing of phase voltage of the respective generator

Data type	Value	Information	Resolution
DINT	-2,147,483,648 to 2,147,483,647	-	1/4096 µs

19.5.2.11.2 Timestamp of positive zero crossing of the phase current

Name:
AnalogInput41 (I1)
AnalogInput42 (I2)
AnalogInput43 (I3)

Time stamp of pos. zero crossing of phase current of the respective generator

Data type	Value	Information	Resolution
DINT	-2,147,483,648 to 2,147,483,647	-	1/4096 µs

19.5.2.12 Instantaneous values of the phase currents generator

Name:
AnalogInput48 (I1)
AnalogInput49 (I2)
AnalogInput50 (I3)

The instantaneous measured values of the respective phase currents are applied here. To calculate the actual physical quantities, the transferred values must be multiplied by the multiplier for the current transformer ("ConfigOutput09Read" on page 33). To avoid aliasing through transfer in the X2X cycle, the values are pre-filtered on the module.

Data type	Values	Information	Resolution
UINT	-32768 to 32767	Corresponds to the direct measured values of the phase currents	-

19.5.2.13 Instantaneous values of the phase voltages generator

Name:
AnalogInput45 (UG1)
AnalogInput46 (UG2)
AnalogInput47 (UG3)

The instantaneous measured values of the respective phase voltages are applied here. To calculate the actual physical quantities, the transferred values must be multiplied by the multiplier for the generator mains ("ConfigOutput06Read" on page 33). To avoid aliasing through transfer in the X2X cycle, the values are pre-filtered on the module.

Data type	Values	Information	Resolution
UINT	-32768 to 32767	Corresponds to the direct measured values of the phase voltages	-

19.5.2.14 Counter for real-time values

Name:
LifeCnt

The counter is incremented with each X2X cycle (new instantaneous values are available 1x per X2X cycle). This makes it possible in the application to detect whether values were skipped or the same value was read twice.

In principle, tasks in which the instantaneous values are processed should have a cycle time equal to the X2X cycle time. If the task cycle time is a multiple of the X2X cycle time, this must be taken into account when configuring register "ConfigOutput125" on page 35.

Data type	Values	Information	Resolution
SINT	-128 to 127	Counter incremented if new instantaneous values available	-

19.5.3 Busbar measured values

19.5.3.1 Line-to-line voltages of the busbar

Name:
AnalogInput13 (UB12)
AnalogInput14 (UB23)
AnalogInput15 (UB31)

Data type	Value	Information	Resolution
INT	-32768 to 32767	-	1 V

19.5.3.2 Phase voltages of the busbar

Name:
AnalogInput16 (UB1)
AnalogInput17 (UB2)
AnalogInput18 (UB3)

Data type	Value	Information	Resolution
INT	-32768 to 32767	-	1 V

19.5.3.3 Frequency of busbar

Name:
AnalogInput35

Data type	Value	Information	Resolution
UINT	0 to 65,535	-	0.01 Hz

19.5.4 Measured value of synchronization mains

(for network configuration "Synchronization network 1 / Synchronization network 2")

19.5.4.1 Line-to-line voltages

Name:
AnalogInput25 (synchronization network 1 US1)
AnalogInput26 (synchronization network 2 US2)

Data type	Value	Information	Resolution
INT	-32768 to 32767	-	1 V

19.5.4.2 Frequencies

Name:
AnalogInput27 (synchronization network 1)
AnalogInput28 (synchronization network 2)

Data type	Value	Information	Resolution
UINT	0 to 65,535	-	0.01 Hz

19.5.5 Measured value of mains

(for "3-phase mains" configuration)

19.5.5.1 Line-to-line voltages of mains

Name:
AnalogInput25 (UN12)
AnalogInput31 (UN23)
AnalogInput32 (UN31)

Data type	Value	Information	Resolution
INT	-32768 to 32767	-	1 V

19.5.5.2 Phase voltages of the generator

Name:
AnalogInput33 (UN1)
AnalogInput34 (UN2)
AnalogInput26 (UN3)

Data type	Value	Information	Resolution
INT	-32768 to 32767	-	1 V

19.5.5.3 Frequency of power mains

Name:
AnalogInput27

Data type	Value	Information	Resolution
UINT	0 to 65,535	-	0.01 Hz

19.5.6 Generator monitoring

19.5.6.1 Read unbalanced load meter

Name:
AnalogInput36

This register can be used to track the current state of the unbalanced load meter (see "Dependent delayed unbalanced load monitoring" on page 38). The unbalanced load meter can be reset with an acyclic trigger bit (see register "ConfigOutput23" on page 33).

Data type	Value	Information	Resolution
UINT	0 to 65535	For 0 to 100%	

19.5.6.2 Reads the unbalanced load current (I_2)

Name:
AnalogInput37

Data type	Value	Information	Resolution
INT	-32768 to 32767	-	1 A

19.5.7 Synchronization

19.5.7.1 Differential angle between synchronization networks

Name:
AnalogInput29

Angular difference between the networks being synchronized.

Specifies by how many degrees the synchronization network is ahead of the network to be synchronized.

Data type	Values	Information	Resolution
INT	-32768 to 32767	-	0.1°

19.5.7.2 Differential voltage between synchronization networks

Name:
AnalogInput30

Differential voltage between the networks being synchronized.

Data type	Value	Information	Resolution
INT	-32768 to 32767	-	1 V

19.6 Minimum cycle time

The minimum cycle time specifies how far the bus cycle can be reduced without communication errors occurring. It is important to note that very fast cycles reduce the idle time available for handling monitoring, diagnostics and acyclic commands.

Minimum cycle time
250 µs

19.7 Minimum I/O update time

The minimum I/O update time for the analog inputs depends on the respective period duration of the measurement signal frequency.

Minimum I/O update time	
At 50 Hz	10 ms