Modulostar® CMS14

Modular fuse-holders

FUSE HOLDERS, FUSE BASES AND SUPPORTS

IEC CYLINDRICAL FUSE HOLDERS



The innovative and comprehensive Modulostar® range of Mersen fuse-holders. Modular fuse-holders are finger-safe under IEC standards to an IP20 grade of protection, including fuse changing (with the flick of a finger). Modular fuse-holders are available in 1, 2, 3 or 4 poles, with or without visual blown fuse indicator, in IEC version or IEC + UL version. Multi-pole units can also be field assembled by ordering pin-ties assembly kit. In size 14 or 22, the range also offers the possibility to use microswitches (supplied with the holders or ordered separately) to allow remote indication. Modulostar® range is made of tough and durable thermoplastic or thermoset material.

TECHNICAL DATA OVERVIEW

Voltage AC	690 VAC
Voltage DC	690 VDC
Amper (A)	50 A
Rated operational current I_e	</= 50A
SCCR	100kA
Mounting	Installation on to DIN rails to EN 60715
Product Size	For cylindrical fuse links 14x51 aM, gG and 14x51 Mersen Protistor® fuse-links
Number of poles	1 to 4 poles

FEATURES & BENEFITS

- Finger safe
- Degree of protection: IP20
- Optional visual blown fuse indicator
- DIN rail mounting
- Modular design
- Lockable
- Multi-pole assembly kit available
- Sealable in closed and open position
- Plastic material UL94V2 mini
- Flame retardant materials with glow wire flammability index to 960°C
- Shock and vibration tested for marine and railway applications

APPLICATIONS

- All circuits up to 690V for protection of motors, transformers, low voltage distribution, control circuits, drive protection
- Non-load operation

STANDARDS

- IEC 60269-2 and IEC 60947-3 Compliance
- RoHS Compliant
- Plastic material: NF 16101 & 16102 Requirement 2 Compliant

©2025 Mersen. All rights reserved. Mersen reserves the right to change, adapt, limit or discontinue its products. Therefore the data provided herein are for information only and are not contractually binding. To ensure that Mersen provides the best solution to your needs, please contact and provide Mersen with all relevant technical specifications and conditions.

PRODUCT RANGE



CMS142



CMS143N

Modulostar® fuse-holders for 14x51 fuse-links, without indicator

Catalog number	Item number	Number of poles/phases	Standards	Package	Weight
CMS14N	T331056	N	CMS 14 neutral conductor	6	0.14 kg
CMS141	A331016	1	CMS 14 single pole	6	0.14 kg
CMS141N	T331010	1 + N	CMS 14 single pole + neutral conductor	3	0.29 kg
CMS142	R331031	2	CMS 14 double pole	3	0.27 kg
CMS143	S331032	3	CMS 14 triple pole	2	0.42 kg
CMS143N	D331042	3 + N	CMS 14 triple pole + neutral conductor	1	0.56 kg
CMS144	F331021	4	CMS 14 quadruple pole	1	0.57 kg



CMS141I

Modulostar® fuse-holders for 14x51 fuse-links, with indicator

Catalog number	Item number	Number of poles/phases	Standards	Package	Weight
CMS141I	L331049	1	CMS 14 single pole	6	0.14 kg
CMS141NI	M331050	1 + N	CMS 14 single pole + neutral conductor	3	0.30 kg
CMS142I	M331004	2	CMS 14 double pole	3	0.29 kg
CMS143I	K331071	3	CMS 14 triple pole	2	0.43 kg
CMS143NI	Q331007	3 + N	CMS 14 triple pole + neutral conductor	1	0.57 kg

Modulostar® fuse-holders for 14x51 fuse-links, for installation of indicator and/or auxiliary micro switch

Catalog number	Item number	Number of poles/ phases	Design	Package	Weight
CMS141P	W331058	1	CMS14 single pole	6	0.14 kg
CMS141NP	X331059	1 + N	CMS14 single pole + neutral conductor	3	0.30 kg
CMS142P	G331022	2	CMS14 double pole, two auxiliary microswitches	3	0.29 kg
CMS143P	R331054	3	CMS14 triple pole	2	0.43 kg
CMS143NP	Z331015	3 + N	CMS14 triple pole + neutral conductor	1	0.56 kg



CMS143NM

Modulostar® fuse-holders for 14x51 fuse-links, with auxiliary microswitch

Catalog number	Item number	Number of poles/ phases	Design	Package	Weight
CMS141M	Z331038	1	CMS14 single pole	6	0.15 kg
CMS141NM	L331026	1 + N	CMS14 single pole + neutral conductor	3	0.31 kg
CMS142M	A331062	2	CMS14 double pole, two auxiliary microswitches	3	0.29 kg
CMS143M	F331067	3	CMS14 triple pole	2	0.43 kg
CMS143M2	H331069	3	CMS14 triple pole, two auxiliary microswitches	2	0.43 kg
CMS143NM	E331043	3 + N	CMS14 triple pole + neutral conductor	1	0.61 kg

Modulostar® fuse-holders for 14x51 fuse-links, with indicator and auxiliary microswitch

Catalog number	Item number	Number of poles/ phases	Design	Package	Weight
CMS141MI	S331055	1	CMS14 single pole	6	0.16 kg
CMS141NMI	Q331030	1 + N	CMS14 single pole + neutral conductor	3	0.30 kg
CMS142MI	X331036	2	CMS14 double pole, two auxiliary microswitches	3	0.29 kg
CMS143MI	P331006	3	CMS14 triple pole	2	0.45 kg
CMS143M2I	Y331037	3	CMS14 triple pole, two auxiliary microswitches	2	0.43 kg
CMS143NMI	H331000	3 + N	CMS14 triple pole + neutral conductor	1	0.57 kg

©2025 Mersen. All rights reserved. Mersen reserves the right to change, adapt, limit or discontinue its products. Therefore the data provided herein are for information only and are not contractually binding. To ensure that Mersen provides the best solution to your needs, please contact and provide Mersen with all relevant technical specifications and conditions.

TECHNICAL DATA

	CMS14	CMS14I	CMS14P	CMS14M	CMS14MI
Size	14x51	14x51	14x51	14x51	14x51
Number of poles/phases	1, 1+N, 2, 3, 3+N, 4	1, 1+N, 2, 3, 3+N	1, 1+N, 2, 3, 3+N	1, 1+N, 2, 3, 3+N	1, 1+N, 2, 3, 3+N
Conventional free air thermal current with fuse links I_{th}	50 A	50 A	50 A	50 A	50 A
Power dissipation at I_{th}	5 W	5 W	5 W	5 W	5 W
Utilisation category	AC20B/DC20B	AC20B/DC20B	AC20B/DC20B	AC20B/DC20B	AC20B/DC20B
Rated insulation voltage U_i	690 V	690 V	690 V	690 V	690 V
SCCR	100 kA	100 kA	100 kA	100 kA	100 kA
Rated impulse withstand voltage U_{imp}	8 kV	8 kV	8 kV	8 kV	8 kV
Degree of protection	IP 20	IP 20	IP 20	IP 20	IP 20
Voltage limit for blown fuse indicator	-	230 to 690V AC/ DC	-	-	230 to 690V AC/ DC
Indication System	-	with indicator	Can receive an indicator and/or an auxiliary microswitch	with auxiliary microswitch	with indicator and auxiliary microswitch
Operating temperature	-25°C to 60°C	-25°C to 60°C	-25°C to 60°C	-25°C to 60°C	-25°C to 60°C
Storage temperature	-25°C to 80°C	-25°C to 80°C	-25°C to 80°C	-25°C to 80°C	-25°C to 80°C
Connection	Max. tightening torque: 3.5Nm (30lbs.-in) Rigid wire = 1.5-35mm² (16-3AWG) Stranded wire = 1.5-25mm² (16-4AWG) PZ2 or flat 5.5x1mm screw drivers recommended (max. diameter 6mm)				
Vibration	Withstand on the 3 main axis*: Sinusoidal vibration testing according to IEC 60068-2-6 2 to 13Hz x= 1 mm peak 13 to 100Hz y= 0.7g peak according to french marine application Random vibration testing according to IEC 61373 Category 1 Class B				
Shock	Shock testing according to IEC 61373 Category 1 Class B Shock testing according to IEC 60068-2-27 15g/11ms/18 shocks * for specific usage please contact us				

SPECIFIC USAGE CONDITIONS

Ambient temperature	>20°C	30°C	40°C	50°C	60°C
Derating factor (I_e)	1	0.95	0.9	0.8	0.7

No of poles (side by side)	1 to 3	4 to 6	>/= 7
Derating factor of current (I_{th})	1	0.95	0.9

Nominal current of fuse-link gR	25 A	32 A	40 A	50 A	63 A
Max. operational current in fuse-holder	23 A	28 A	34 A	40 A	46 A
Cable wire section	4 mm²	6 mm²	10 mm²	10 mm²	16 mm²

©2025 Mersen. All rights reserved. Mersen reserves the right to change, adapt, limit or discontinue its products. Therefore the data provided herein are for information only and are not contractually binding. To ensure that Mersen provides the best solution to your needs, please contact and provide Mersen with all relevant technical specifications and conditions.

DIMENSIONS

Modulostar® CMS14 fuse-holders for cylindrical fuse-links class 14x51mm

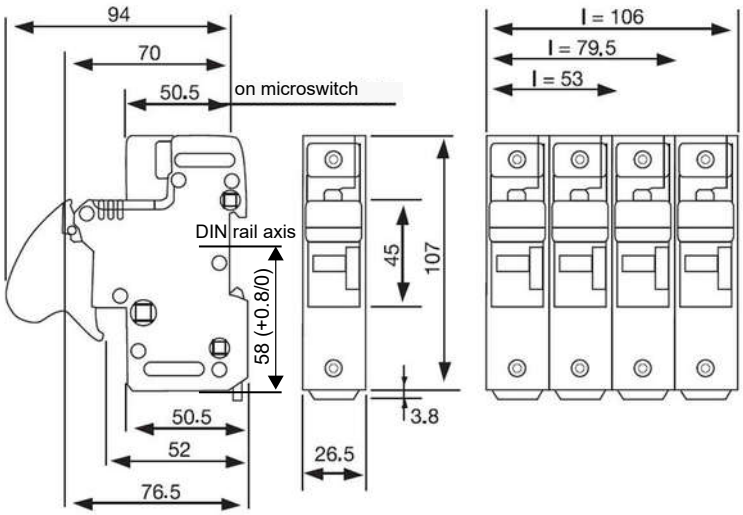

Dimensions in mm

FUNCTIONS

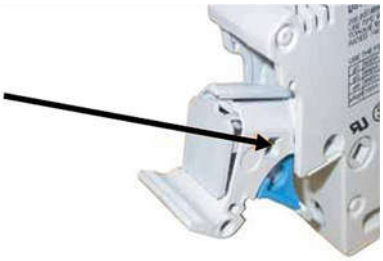

Indicator light kit for CMS14

With the indicator light a blown fuse can be quickly located if power is still on.

1. Carefully remove the cover with 2 screw drivers.



2. Slip the indicator light's to insert into the rails, being careful not to twist the contact tabs.

MERSEN.COM

©2025 Mersen. All rights reserved. Mersen reserves the right to change, adapt, limit or discontinue its products. Therefore the data provided herein are for information only and are not contractually binding. To ensure that Mersen provides the best solution to your needs, please contact and provide Mersen with all relevant technical specifications and conditions.

Expertise, our source of energy

FUNCTIONS

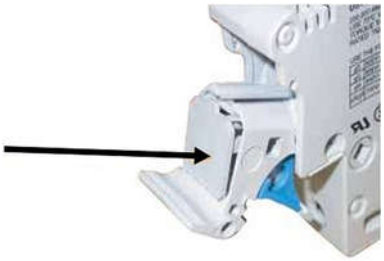

3. Put the cover back on.

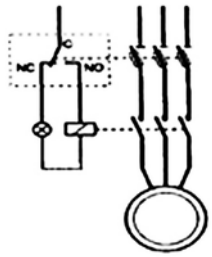

Auxiliary microswitch functions

Fuse melting: a fuse-holder containing a fuse with a striker sends out a signal when the fuse element melts.

Pre-isolation: when opening the fuse-holder, the microswitch sends a signal before the opening of the main contacts.

Presence: sends a signal when the holder is closed with no fuse in it.

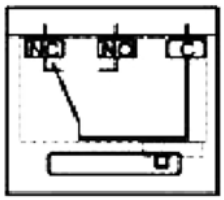

With the fuse in the handle closed state

Characteristics

Rated insulation voltage: 250VAC

Rated operational current following IEC 60947-5 & -1

Utilization category AC15: 4A/24V, 4A/48V, 3A/127V, 2.5A/240V

Utilization category DC13: 3A/24V, 1A/48V, 0.2A/127V, 0.1A/240V

Minimum operational current and voltage: 1mA/4V AC or DC

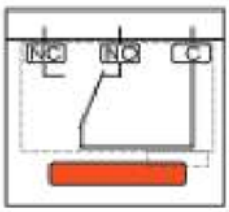

No fuse - Fuse blown handle open

Auxiliary microswitch is designed to operate equally well on dual-current (1mA 4V minimum) or medium-current (5A maximum) circuits. However, a given product should only be used to switch one type of circuit during its working life.

Connection: Faston lugs

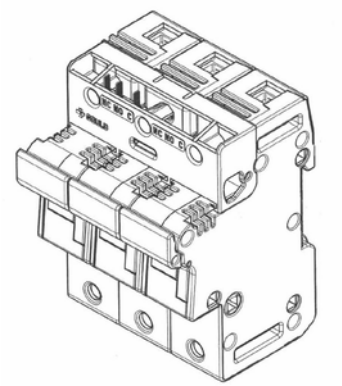

Auxiliary microswitch can only be mounted on previously prepared fuse disconnectors. Use of the auxiliary microswitch for fuse melting requires the use of fuses with strikers.

1 auxiliary microswitch

CMS14W2

MERSEN.COM

© 2025 Mersen. All rights reserved. Mersen reserves the right to change, adapt, limit or discontinue its products. Therefore the data provided herein are for information only and are not contractually binding. To ensure that Mersen provides the best solution to your needs, please contact and provide Mersen with all relevant technical specifications and conditions.

MERSEN Expertise, our source of energy

FUNCTIONS

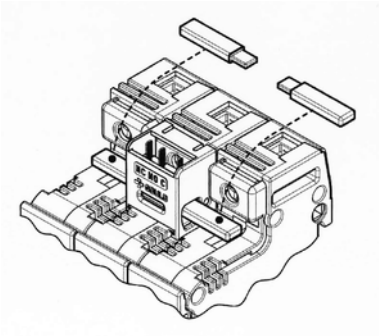

CMS14W1 + CMS1422BP

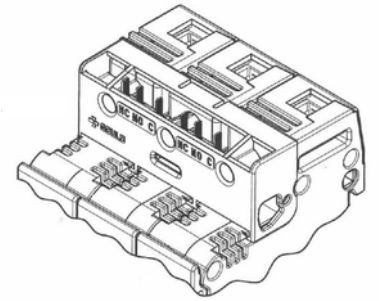

2 auxiliary microswitches
CMS14W3

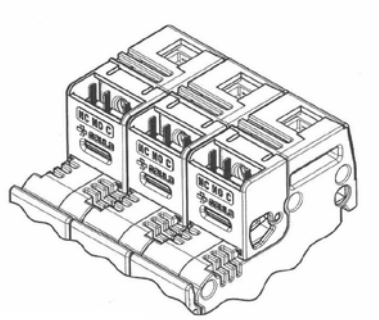

3 auxiliary microswitches
Independent
3 x CMS14W1

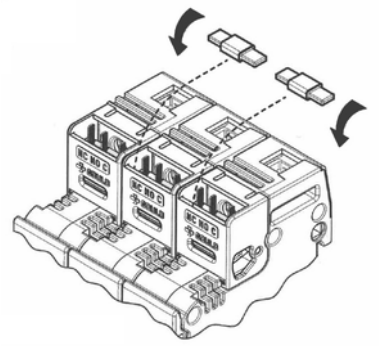

Mechanically interconnected
3 x CMS14W1 + 2 X CMS1422PTH

©2025 Mersen. All rights reserved. Mersen reserves the right to change, adapt, limit or discontinue its products. Therefore the data provided herein are for information only and are not contractually binding. To ensure that Mersen provides the best solution to your needs, please contact and provide Mersen with all relevant technical specifications and conditions.

ACCESSORIES

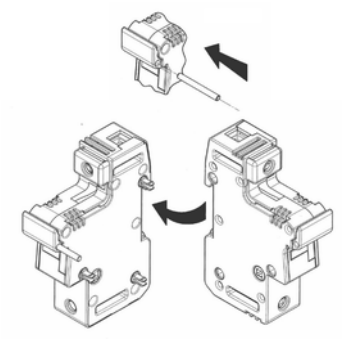

Assembly kit

Kit for multi phase connection

Catalog number	Item number	Features	Package	Weight
CMS1422PAK	Z218223	links for connection of multipole units	10	2.1 g

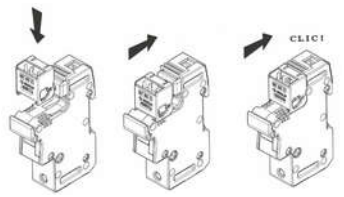

Auxiliary Switches

Catalog number	Item number	Features	Package	Weight
CMS1422BP	F213629	Enlargement pin for auxiliary microswitch	10	1.5 g
CMS1422PTH	J214138	Auxiliary microswitch assembly pin (between 2 kits)	10	0.5 g
CMS14W1	M218741	Auxiliary microswitch kit 1 pole CMS14	1	20 g
CMS14W2	J331185	Auxiliary microswitch kit 3 poles CMS14	1	25 g
CMS14W3	Z331176	2 Auxiliary microswitches kit 3 poles CMS14	1	29 g



LOCK

Locking devices

Catalog number	Item number	Features	Package	Weight
LOCK	M223525	Padlock	1	0.48 kg



TBB1A



TBB1C



TBB23A



TBB23C

Power supply

Catalog number	Item number	Application	Features	Package	Weight
TBB1A	D210315	Max. rms current 90A	1 phase axial incoming power supply	50	10.1 g
TBB1C	E210316	Max. rms current 90A	1 phase lateral incoming power supply	50	10 g
TBB23A	F210317	Max. rms current 90A	2 & 3 phases axial incoming power supply	50	23.3 g
TBB23C	G210318	Max. rms current 90A	2 & 3 phases lateral incoming power supply	50	23.1 g

MERSEN.COM

© 2025 Mersen. All rights reserved. Mersen reserves the right to change, adapt, limit or discontinue its products. Therefore the data provided herein are for information only and are not contractually binding. To ensure that Mersen provides the best solution to your needs, please contact and provide Mersen with all relevant technical specifications and conditions.

MERSEN Expertise, our source of energy

ACCESSORIES



Wiring bars / Insulated bus bars

Catalog number	Item number	Application	Design	Package	Weight
Wiring bars / Insulated Busbars					
CMS14BB1F12	Y210310	Max. rms current 63A, for installation of 12 modules	single pole	5	47.4 g
CMS14BB2F6	Z210311	Max. rms current 63A, for installation of 6 modules	double pole	5	0.1 kg
CMS14BB3F4	A210312	Max. rms current 100A, for installation of 4 modules	triple pole	5	0.12 kg

Indication facilities

Catalog number	Item number	Features	Package	Weight
CMS1422LHI	A225653	Indicator light kit	1	10 g

MERSEN.COM

©2025 Mersen. All rights reserved. Mersen reserves the right to change, adapt, limit or discontinue its products. Therefore the data provided herein are for information only and are not contractually binding. To ensure that Mersen provides the best solution to your needs, please contact and provide Mersen with all relevant technical specifications and conditions.

Expertise, our source of energy