BFA02670230

COMPLETA STAR-DELTA STARTER, OPEN FRAME, FOR STARTING TIME UP TO 12 SECONDS AND A MAXIMUM OF 30 OPERATIONS/HOUR, MAX IEC OPERATING CURRENT 43A. COIL VOLTAGE 230VAC 50/60HZ



Product designation			Star-delta starter
Product type designation			BFA026
Electrical features			
Maximum operating current (≤440V)		A	43
Components			
Contactor standard supplied			BF2600A / BF2600A / BF1810A
Thermal relay standard supplied			No
Thermal relay to purchase separately			RF38
Auxiliary contact standard supplied			BFX1020 / BFX1011 / BFX1011
Contact characteristics			
IEC standard motor powers			
	230V	kW	11
	400V	kW	22
	440V	kW	22
	500V	kW	25
Mechanical features			
Weight		g	1800
Dimensions			

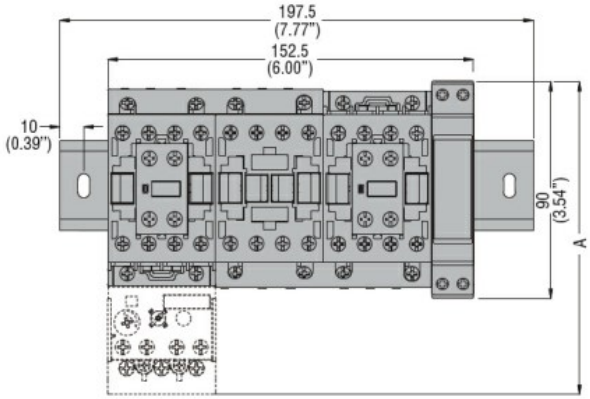

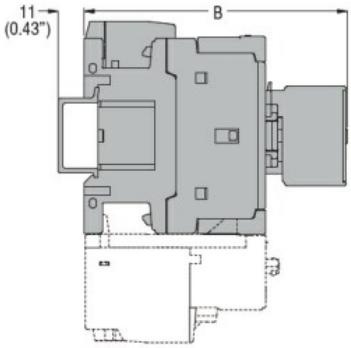

STARTER TYPE	A	B
BFA009 70	130.5 (5.14")	109.5 (4.31")
BFA012 70	130.5 (5.14")	109.5 (4.31")
BFA018 70	130.5 (5.14")	109.5 (4.31")
BFA025 70	130.5 (5.14")	109.5 (4.31")
BFA026 70	135 (5.14")	119 (4.68")
BFA032 70	135 (5.14")	119 (4.68")
BFA038 70	135 (5.14")	119 (4.68")
BFA050 70	173 (6.81")	142 (5.59")
BFA065 70	173 (6.81")	142 (5.59")
BFA080 70	183 (7.20")	142 (5.59")

Wiring diagrams

The characteristics described in this document are subject to updates or modifications at any time. The descriptions, technical and functional information, illustrations and instructions in this brochure are purely illustrative, and are consequently not contractually binding

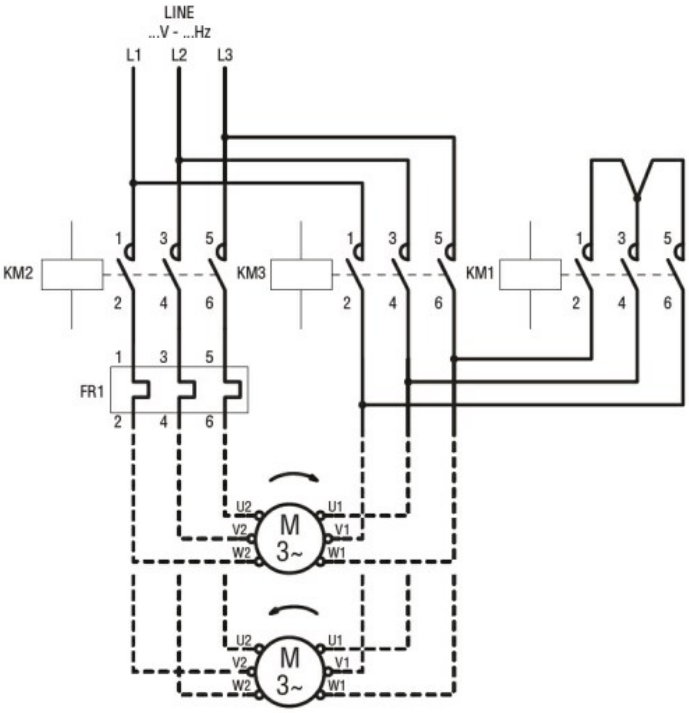

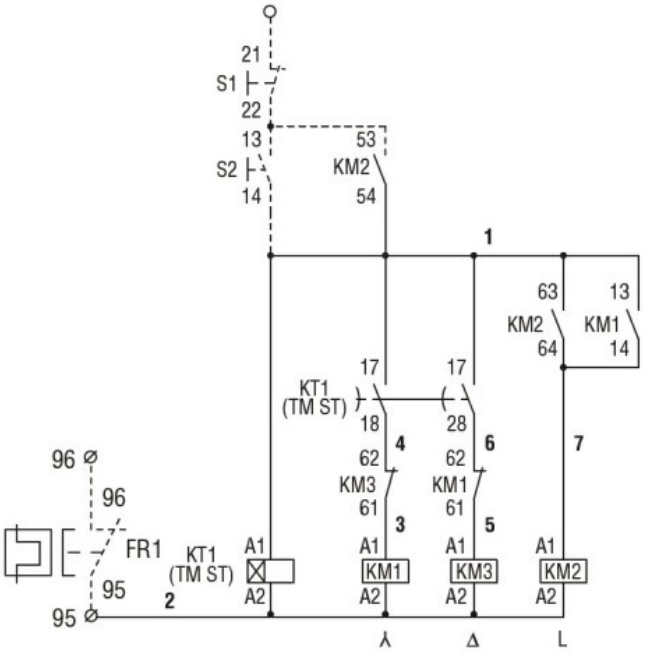

Certifications and compliance

Compliance

	IEC/EN 60947-1
	IEC/EN 60947-4-9

Certificates

/

ETIM classification

ETIM 8.0	EC001037 - Motor starter/Motor starter combination

The characteristics described in this document are subject to updates or modifications at any time. The descriptions, technical and functional information, illustrations and instructions in this brochure are purely illustrative, and are consequently not contractually binding