MURR ELEKTRONIK
stay connected

Adaptor M12 male / M8 female A-cod.

4-pol., conf. 1,2,3,4

Adapter
Male - female
M12 – M8, 4-pole
for M12 distribution box, 4-pole
M12, A-coded
Art-No. 7005 - M12/M8 Lite - (plastic hexagonal screw) on request

Link to Product

Illustration



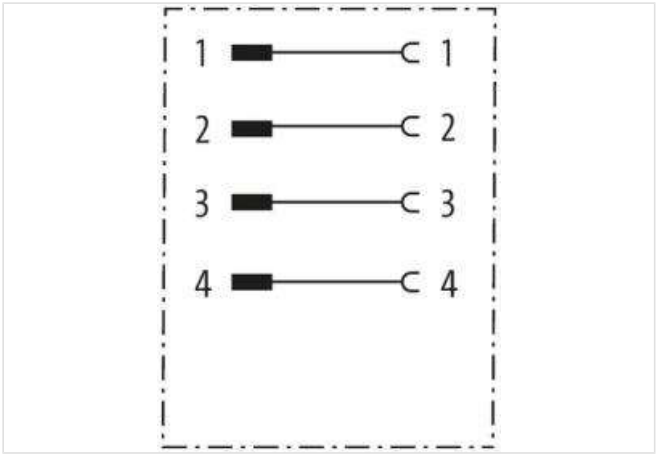

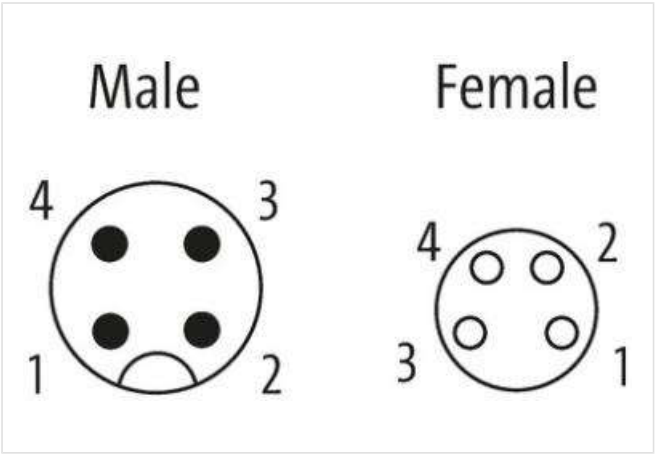

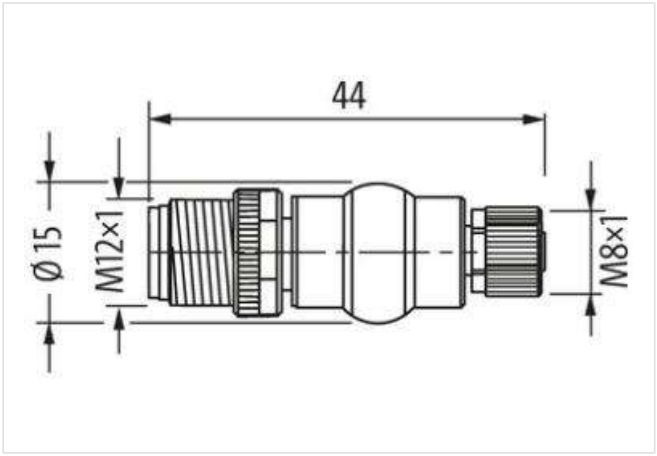

Product may differ from Image

c UL us LISTED

Side 1

Tightening torque	0,6 Nm
Mounting method	inserted, screwed
Family construction form	M12
Thread	M12 x 1

The information in this Product-PDF has been compiled with the utmost care.
Liability for the correctness completeness and topicality of the information is restricted to gross negligence. Version: 2024-01-31

Coding	A
Material contact	Copper alloy
No. of poles	4
Width across flats	SW13
Side 2	
Tightening torque	0,4 Nm
Mounting method	inserted, screwed
Family construction form	M8
Thread	M8 x 1
Coding	A
Material contact	Copper alloy
No. of poles	4
Width across flats	SW9
Commercial data	
ECLASS-6.0	27143423
ECLASS-6.1	27260702
ECLASS-7.0	27440102
ECLASS-8.0	27440102
ECLASS-9.0	27440106
ECLASS-10.1	27440102
ECLASS-11.1	27440102
ECLASS-12.0	27440106
ETIM-5.0	EC001855
customs tariff number	85366990
GTIN	4048879143196
Packaging unit	1
Electrical data | Supply	
Operating voltage AC max.	50 V
Operating voltage DC max.	60 V
Operating voltage AC max. (UL-listed)	30 V
Operating voltage DC max. (UL-listed)	30 V
Current operating per contact max.	4 A
Diagnostics	
Status indication LED	no
Installation | Connection	
Mating cycles min.	100
Device protection | Electrical	
Degree of protection (EN IEC 60529)	IP67
Additional condition protection degree	inserted, screwed
Pollution Degree	3
Rated surge voltage	1,5 kV
Material group (IEC 60664-1)	I
Mechanical data | Material data	
Coating contact	gold plated
Coating locking	Nickeled
Material gasket	FKM
Material housing	PUR
Locking material	Zinc die-casting
Mechanical data | Mounting data	
Mounting method	Schraubgewinde
Environmental characteristics | Climatic	

The information in this Product-PDF has been compiled with the utmost care.
Liability for the correctness completeness and topicality of the information is restricted to gross negligence. Version: 2024-01-31

Operating temperature min.	-25 °C
Operating temperature max.	85 °C
Conformities, approvals	
Product standard	DIN EN 61076-2-101 (M12), DIN EN 61076-2-114 (M8)

The information in this Product-PDF has been compiled with the utmost care.
Liability for the correctness completeness and topicality of the information is restricted to gross negligence. Version: 2024-01-31