# EVC209

## Connecting cable with socket

**ADOAH040MSS2,05H04**

Please see the technical note under "Downloads"

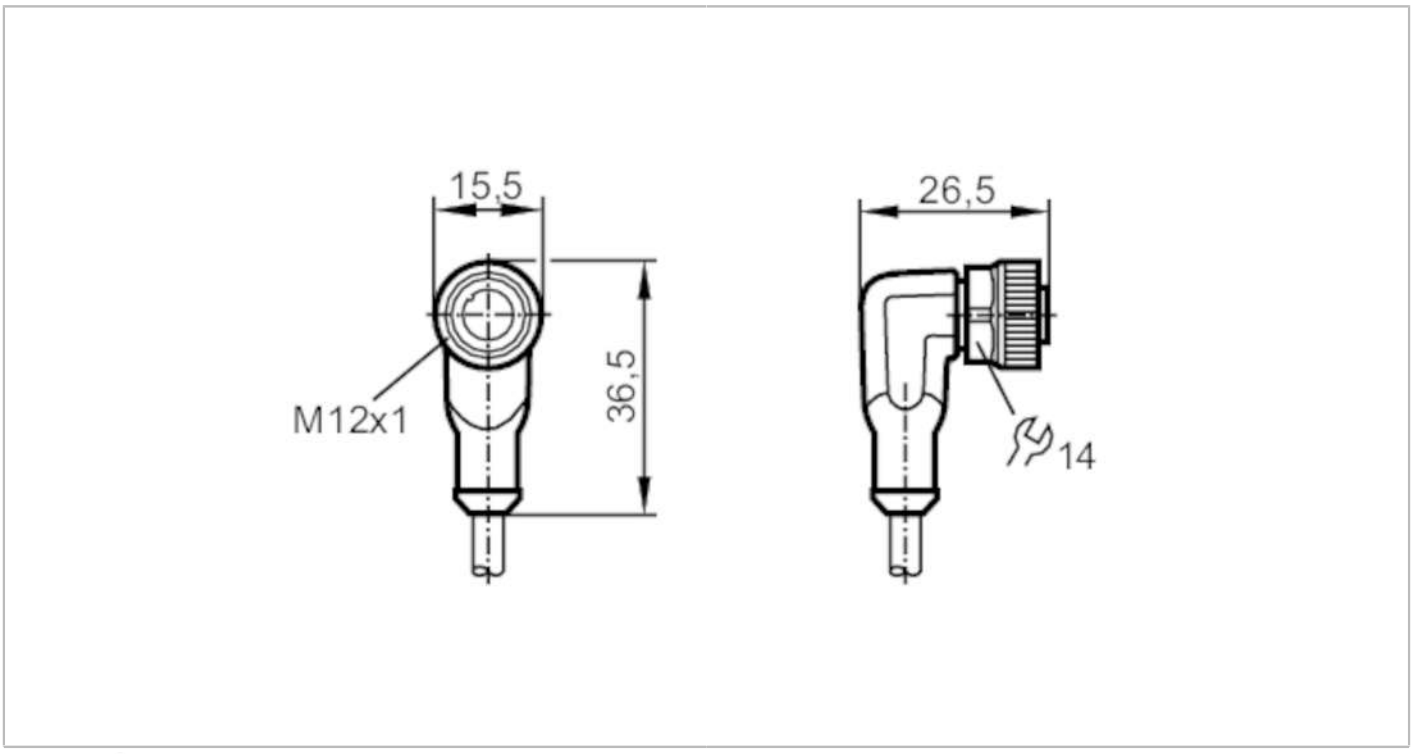


| | | |
|---|---|---|
| **Application** | | |
| Special feature | | Free from silicone; Halogen-free; Gold-plated contacts; Drag chain suitability |
| Free from silicone | | yes |
| **Electrical data** | | |
| Operating voltage | [V] | < 250 AC / < 300 DC |
| Protection class | | II |
| Max. current load total | [A] | 4 |
| **Operating conditions** | | |
| Ambient temperature | [°C] | -25...90 |
| Note on ambient temperature | | cULus: ...75 °C |
| Ambient temperature (moving) | [°C] | -25...90 |
| Note on ambient temperature (moving) | | cULus: ...75 °C |
| Storage temperature | [°C] | -25...55 |
| Storage humidity | [%] | 10...100 |
| Other climatic conditions for storage according to stated class | | 1K22/ DIN 60721-3-1 |
| Protection | | IP 67 |
| **Mechanical data** | | |
| Weight | [g] | 87.5 |
| Dimensions | [mm] | 26.5 x 15.5 x 36.5 |

# EVC209

## Connecting cable with socket

**ADOAH040MSS2,05H04**

| | | |
|---|---|---|
| Materials | housing: TPU orange; Sealing: FKM | |
| Material nut | brass, nickel-plated | |
| Drag chain suitability | yes | |
| Drag chain suitability | bending radius for flexible use | min. 10 x cable diameter |
| | travel speed | max. 3.3 m/s for a horizontal travel length of 5 m and max. acceleration of 5 m/s² |
| | bending cycles | > 5 Mio. |
| | torsional strain | ± 180 °/m |

### Remarks

| | |
|---|---|
| Notes | Please see the technical note under "Downloads" |
| Pack quantity | 1 pcs. |

### Electrical connection

Cable: 2.05 m, PUR, Halogen-free, black, Ø 4.3 mm; 4 x 0.34 mm² (42 x Ø 0.1 mm )

### Electrical connection - socket

Connector: 1 x M12, angled; coding: A; Locking: brass, nickel-plated; Contacts: gold-plated; Tightening torque: 0.6...1.5 Nm

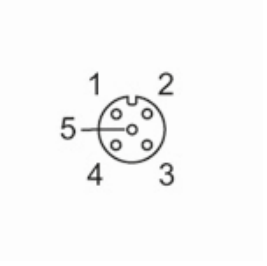


### Connection

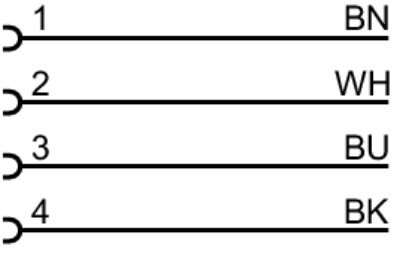


| | |
|---|---|
| | Core colours : |
| BK = | black |
| BN = | brown |
| BU = | blue |
| WH = | white |

# EVC209

## Connecting cable with socket

**ADOAH040MSS2,05H04**

## Diagrams and graphs

characteristic line for derating

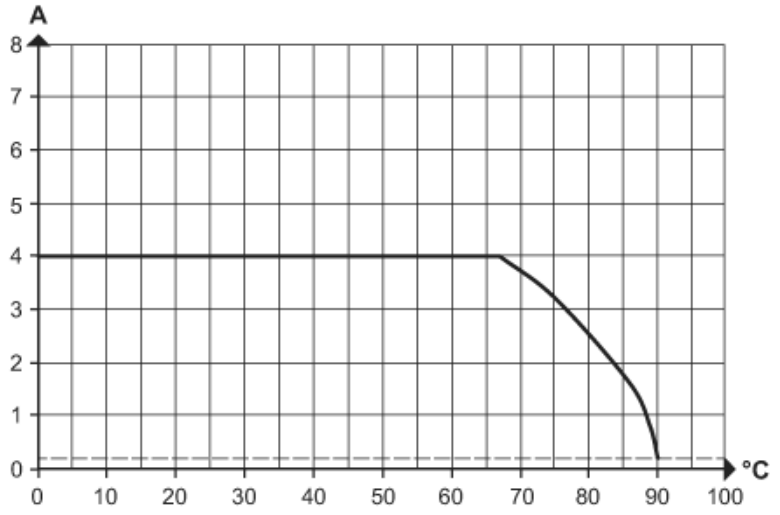


Derating Imax * 0.8 (DIN EN 60512-5-2)

X Ambient temperature [°C]

Y Current [A]