Tongue Interlock Switch with Guard Locking & RFID Coding

MLZ Operating Instructions



MLZ
(S/Steel)



MLZ Sliding Handle
Bolt (S/Steel)



MLZ Single Action
Latching Pull Handle
(S/Steel)



Rear Release
Button (90mm)

Optional Spring
Catch for Sliding
Handle



MLZ Rear Gasket
Set

Application:

The MLZ Safety Interlock switches are designed to fit to the leading edge of machine guard doors to provide robust guard locking and provide a tamper resistant interlock mechanism.
They are designed to provide robust position interlock detection for moving guards and hold the guard door locked until the solenoid voltage is applied to the switch.
They have RFID coded actuators for high level coding according to ISO14119.

Operation:

The switch is rigidly mounted to the fixed frame of the guard or machine. The actuator is fitted to the moving part (frame) of the guard and is aligned to the switch entry aperture.
The actuator has RFID coding which aligns with a programmed receiver inside the switch housing during closing of the guard.
When the actuator enters the switch (solenoid de-energised) it locks via a spring, the RFID coding is verified and the OSSD outputs are turned on to enable a machine start.
To unlock the actuator and turn off the OSSD outputs an unlock signal is applied to the solenoid (solenoid energised).
An adjustable spring ball catch is incorporated into the switch head to provide a light latch when unlocked.

IMPORTANT:

The switches must be connected to a safety controller (or safety relay) to monitor the OSSD outputs.
When connected independently or in series to a PLe Category 4 controller they will maintain Ple safety levels to ISO13849-1.

Record any RFID codes as required by factory rules or with reference to any risk assessment for the particular application.
The risk assessment for the particular application should include the risk of spare actuators. Spare actuators should not be readily available and must be securely controlled.

The safety functions and mechanics must be tested regularly. For application where infrequent guard access is foreseeable, the system must have a manual function test to detect a possible accumulation of faults. At least once per month for PLe or once per year for PLd (ISO13849-1). Where possible it is recommended that the control system of the machine demands and monitors these tests, and stop or prevents the machine from starting if the test is not done, (see ISO14119).
It is the responsibility of the user to ensure the correct overall functionality of its systems and machines.

Ensure that the switch holding force (Fzh) is sufficient to withstand the static forces applied during normal use and dynamic effects caused by bouncing of the guard shall not create an impact reaction force which exceeds the holding force. If the expected impact reaction forces are higher than the specified holding force for the switch, then design measures must be applied to avoid the force.

IDEM, its subsidiaries and affiliates, are not in a position to guarantee all of the characteristics of a given system or product not designed by IDEM.

Installation:

1. Installation of all IDEM interlock switches must be in accordance with a risk assessment for the individual application.
   Installation must only be carried out by competent personnel and in accordance with these instructions.
2. M5 (or appropriate) mounting bolts must be used to fix the switch and actuator mounting plates. The tightening torque to ensure reliable fixing is 4.0 Nm.
   Do not mount adjacent switches or actuators closer than 100mm. The actuator entry can be chosen from any of the 3 entry apertures in the head of the switch.
3. Always fit a mechanical stop to the guard to prevent damage to the front of the switch.
   Always ensure correct alignment of actuator with the entry aperture of the switch. Use alignment guides to ensure that the actuator enters the switch and locks without striking the sides of the switch housing.
4. The RFID code is factory set. For instances where replacement of the RFID actuator is required please contact IDEM via e-mail: technical@idemsafety.com.
5. After installation check operation of all control circuits and the locking function.
6. If fitted, the auxiliary release function is achieved by use of a special tool and is to be used in exceptional circumstances.
7. Adjustment of the spring ball catch is made during installation to provide a light latch during closing of the guard, refer to **mounting dimensions**.
8. For installation of handle and rear release accessories refer to **mounting dimensions**.
9. See also **Safety Precautions and Precautions for Correct Use**.

Precautions for Correct Use:

Prohibited.

DO NOT store or use the products under the following conditions.

1. In direct sunlight.
2. Where subject to vibration or mechanical shock beyond the rated values.
3. Where subject to static electrically or other form of noise.
4. Where subject to possible exposure to radioactivity.
5. Where product is used close to power supply lines.
6. Where product is used too closed to magnetically sensitive equipment
e.g. PC hard-disks, etc.

Safety Precautions:

Mandatory. Serious injury or property damage may occur.

1. DO NOT use the switches where flammable gases or explosive gases may be present.
2. Power OFF before performing wiring and control connections.
3. DO NOT operate outside the rated supply voltage or ambient temperature rating.
4. Ensure that the +24 VDC line does NOT touch the outputs. Serious injury or death may occur due to bypassing the safety function of the switches.
5. DO NOT use on systems with a positive ground (earth). If safety outputs short to a positive ground, the safety function may be bypassed and serious injury or death may occur.
6. DO NOT connect loads beyond the rated values to the safety outputs. Serious injury may occur due to breakdown of safety outputs.
7. DO NOT use the auxiliary output in a safety function. Serious injury or death may occur.

Maintenance:

Every month: Check correct operation of all circuits and the Lock function. If the actuator shows signs of bending or the switch head housing displays mechanical damage then remove and replace. IDEM will not accept responsibility for failure of the switch functions if the installation and maintenance requirements shown in this sheet are not implemented.
Every 6 months: Check cabling for signs of damage and connectors for tightness and sealing. **THESE INSTRUCTIONS FORM PART OF THE PRODUCT WARRANTY.**

Tongue Interlock Switch with Guard Locking & RFID Coding

Head Entry Blocking Plug:

Included with each switch, are x2 optional Silicone Head Entry Plugs. For use where additional tamper resistance or head protection is required. Simply push firmly into unused head apertures with arrow pointing down as shown below to the main body of the switch.

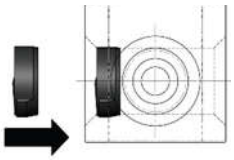

470404 MLZ Rear Gasket Set for Switch and Actuator:

Optional accessory for hygiene specific environments. Silicone gasket set with SS316 inserts for controlled compression against guarding or machine. Offered to prevent any unwanted contaminant build up underneath the safety locking switch or actuator.

Gaskets 2.5mm thick, compressed to controlled 2mm when fitted underneath switch and actuator and fitting screws tightened to 4Nm.



Dimensions (mm):

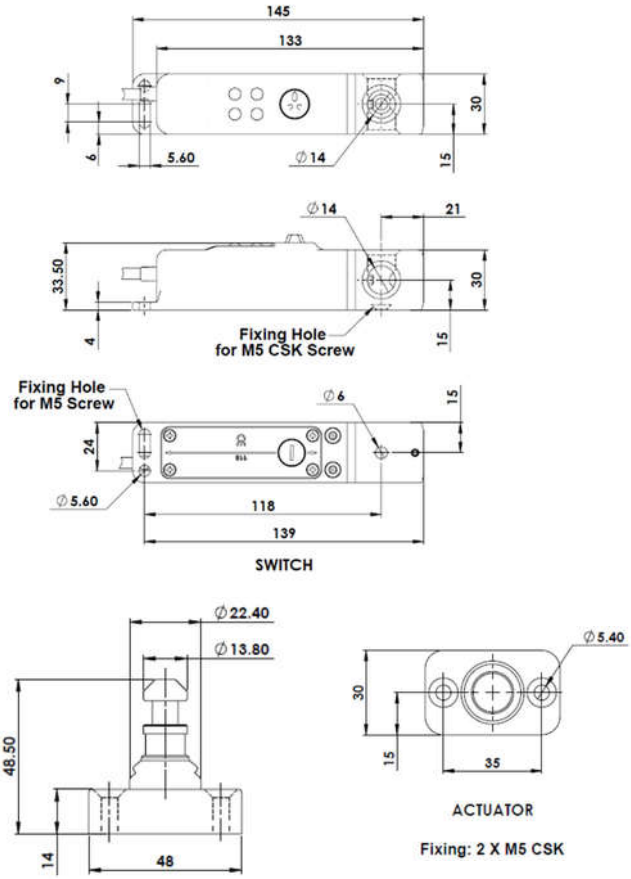

Sliding Handle Accessories:

(to be purchased separately):

Part No. **210005**
Rear Escape Handle



Part No. **470403**
Optional Spring Catch for Sliding Handle



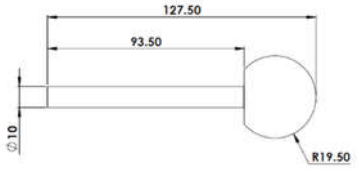

Adjustable Spring Ball Catch:

Top view of switch.

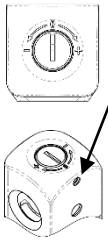

1. Ensure switch is upright, with head facing upwards.
2. Using 2mm Hex Key, loosen rear M4 grub screw, 4 full turns.
3. Rotate adjustor plug as required to achieve desired latching force:
Minimum: 90 deg. anti-clockwise: 30N.
Maximum: 90 deg. clockwise: 100N.
4. Align adjustor plug with locking grub screw (press slightly for increased force, release for reduced force), and re-tighten with 2mm Hex Key to 2Nm, ensuring 4 full turns to lock in position.

Auxiliary release:



The auxiliary release function is achieved by use of a special tool.
Release Tool:



Part: 140123

470401 MLZ Rear Release Button (90mm):

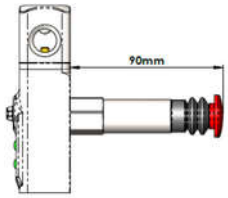

The switch can be mounted such that access to the release button is available from inside the active guard area. Pressing and holding the release button will release the lock mechanism and open the lock monitoring contacts, whilst the guard can be pushed open. The rear release button is an accessory which can be fitted by removing the seal plug at the back of the switch.

470402 MLZ Sliding Gate Handle

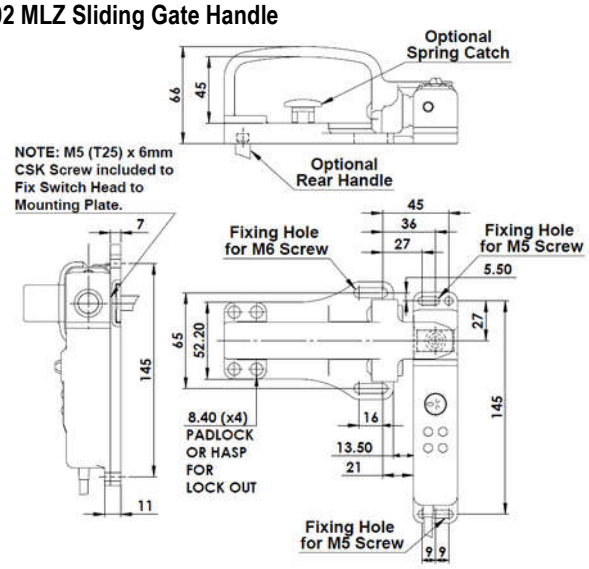

470410-L/R MLZ Single Action Latching Pull Handle SS

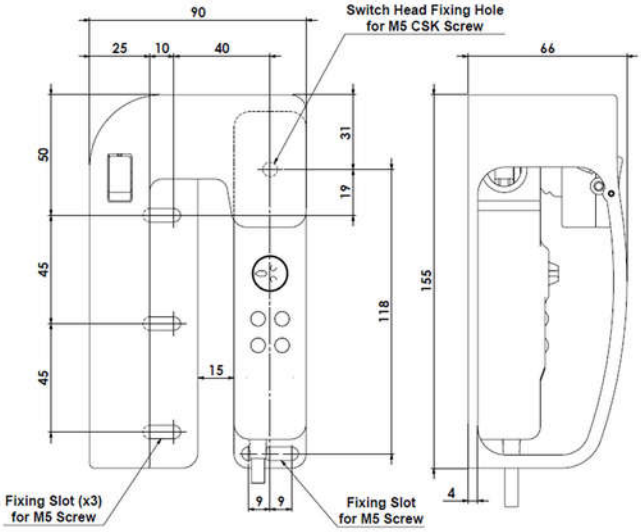

Operation:
The Single Action Pull Handle has been designed such that it aids in reducing the possibility of accidental / unintended re-closure and re-latching of the guard door.

Once opened, the handle will automatically rest in a position whereby a Stainless-Steel arm with Silicone bumper plate, will obstruct re-closure. To re-close the guard door, the operator must take an intentional, additional step, to depress the thumb switch on the top of the handle. This will then lift the bumper plate, and will allow re-closure of the guard door and machine re-start.

Tongue Interlock Switch with Guard Locking & RFID Coding

Diagnostics:

GUARD	
Guard Closed and Locked	Green (Steady)
Guard Closed and Unlocked	Green (Flash)
Code Incorrect	Red (Flash)
Guard Open	Red

INPUT	
Safety Inputs On	Green (Steady)
Safety Input Missing	Green (Flash)
Safety Inputs Off	Off
Internal fault	Red (Steady)

OUTPUT	
Safety Outputs On	Green (Steady)
Safety Outputs Off	Off
External fault	Red (Flashing)

SOLENOID	
Solenoid Energised	Red
Solenoid De-energised	Off

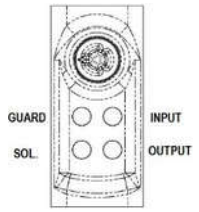

8 pin / 8 wire versions:

8 pin M12 Male Plug on 250mm Flying Lead (Pin view from switch)	Flying Lead Colour	Switch Circuit
2	Red	Supply +24V.dc
3	Blue	Supply 0V.dc
7	Black	Safety Input 1
1	White	Safety Output 1
4	Yellow	Safety Input 2
6	Green	Safety Output 2
8	Orange	Guard open signal +24V.dc
5	Brown	Solenoid enable +24V.dc

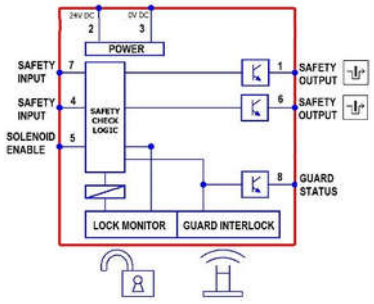

Internal Schematic 8 pin / 8 wire

Schematic control circuit example:

(8 pin / 8 wire version).

Connected to SCR-31P-i relay to give Ple to ISO13849-1.
Stop / Start Buttons, External Lamp (Guard open).
Shown machine in able to start status.

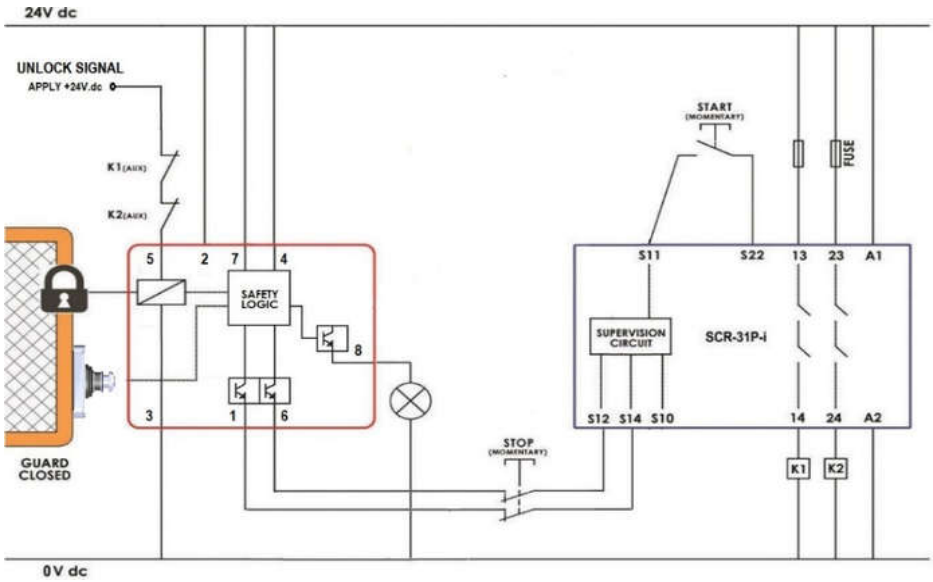

Schematic control circuit example:

(8 pin / 8 wire version).

Time delayed opening.

Connected to SCR-31P-i relay and
SEU-TD-I expansion relay to give Ple instant
and PLd delayed to ISO13849-1.
Stop / Start Buttons, External Lamp (Guard open).
K1 K2 instant. K3 K4 delayed.
Shown machine in able to start status.

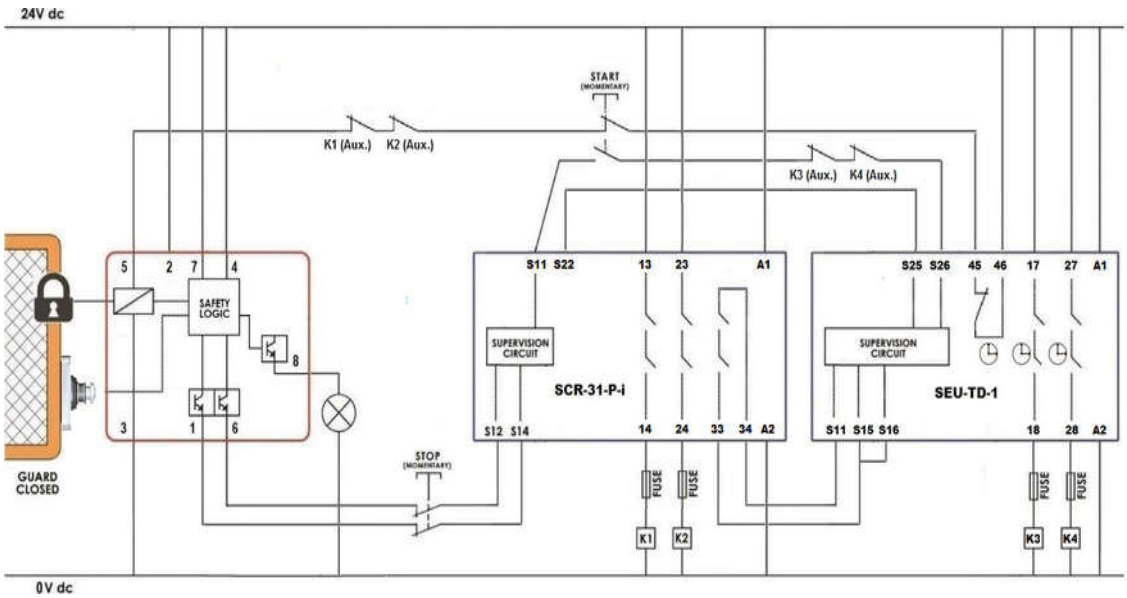

Schematic connection example:

(8 pin / 8 wire version).

Series connection (8 pin / 8 wire version).

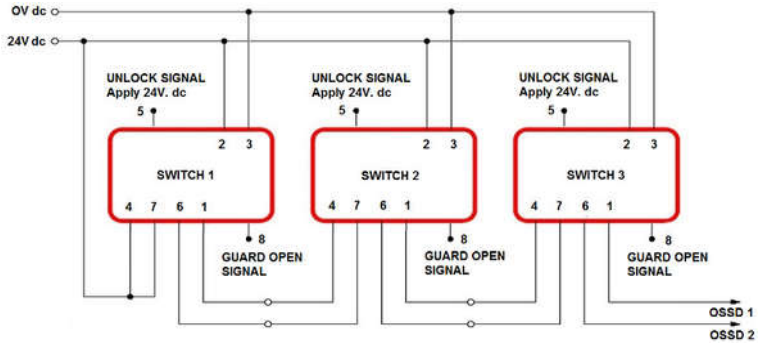

Tongue Interlock Switch with Guard Locking & RFID Coding

5 pin versions:

5 pin M12 Male Plug on 250mm Flying Lead (Pin view from switch) 	Switch Circuit
1	Supply +24V.dc
2	Safety Output 1
3	Supply 0V.dc
4	Safety Output 2
5	Unlock (Solenoid enable +24V.dc)

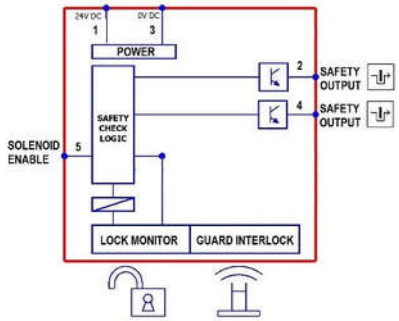

Internal Schematic 5 pin

Schematic control circuit example:

(5 pin version).

Connected to SCR-31P-i relay to give Ple to ISO13849-1.
Stop / Start Buttons.
Shown machine in able to start status.

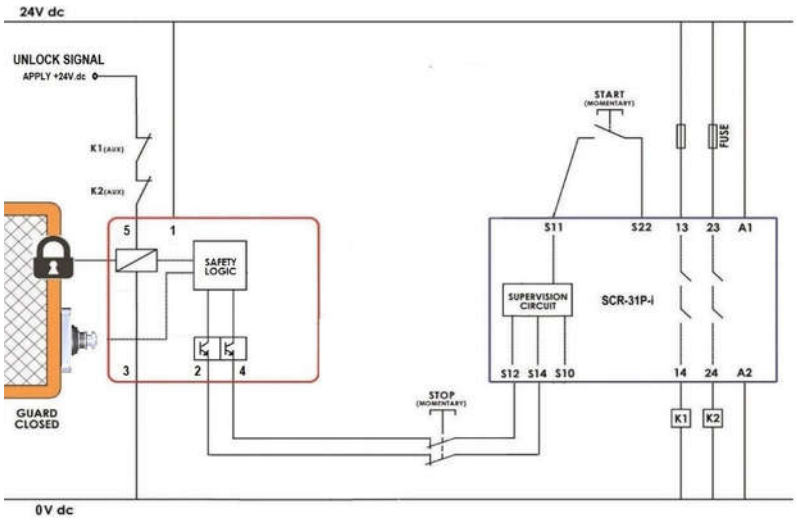

Technical Data:	
Standards: ISO14119 EN 60947-5-3 EN 60204-1 ISO 13849-1 EN 62061 UL60947-5-1	
Supply Voltage	24Vdc (+/- 10%) SELV/PELV or Class 2
Power Consumption	R+ (50mA Max.)
	S+ (500mA Max.) (Solenoid)
Outputs Rated Voltage	24 Vdc
Outputs Max. Current	0.1 A
Outputs Min. Current	1 mA
Outputs Type	OSSD, PNP
Inputs Rated Voltage	24 Vdc
Inputs Rated Current	2 mA
Dielectric Withstand	250V.ac
Insulation Resistance	100 Mohms
Holding Force (ISO14119)	F1Max: 4000N Fzh: 3077N
Adjustable Spring Ball Catch	Adjustable 30 – 100N. (Light latch).
Coding level (ISO14119)	Type 4 High
Assured Locking distance	6mm
Sao / Sar (RFID)	10mm / 20mm
Response Time Guard Open	60ms max.
Response Time Inputs Off	20ms max.
Actuator entry minimum radius	175mm
Body Material	Stainless Steel 316
Head Material	Stainless Steel 316
Mechanical Actuator Material	Stainless Steel 316
Enclosure Protection	IP67 / IP69K (QC IP67 for connector)
Operating Temperature	-25°C to +55°C
Mechanical Life Expectancy (B10d)	2.5 x 10^6 cycles at 100mA load
Vibration	IEC68-2-6, 10-55Hz+1Hz
	Excursion: 0.35mm, 1 octave/min

Information with regard to UL Standards:
Type 1 enclosure. Use Class 2 power supply or equivalent.
Maximum temperature 40°C. Maximum output 24V.dc 100mA.

Safety Classification for Guard position monitoring:

Characteristic data according to IEC62061 (used as a subsystem)

Safety Integrity Level	SIL 3	
PFH (1/h)	1.0 E-09	Corresponds to 1% of SIL3
PFD (Av.)	8.7 E-05	Corresponds to 9% of SIL3
Proof Test Interval T_1	20a	

Characteristic data according to EN ISO13849-1

Performance Level	e	
Category	Cat 4.	
$MTTF_d$	771a	
Diagnostic Coverage DC	High	

Switch Sales Part Numbers		
470001	MLZ	5m. cable 2 x OSSD + Aux.
470002	MLZ	10m. cable 2 x OSSD + Aux.
470003	MLZ	M12 QC 8 pin male on 250mm Flying lead 2 x OSSD + Aux.
470103	MLZ	M12 QC 5 pin male on 250mm Flying lead 2 x OSSD
Accessory Sales Part Numbers		
470401	MLZ	Rear Release Button (90mm)
470402	MLZ	Sliding Handle Bolt
470403	MLZ	Optional Spring Catch for Sliding Handle
470404	MLZ	Rear Gasket Set for Switch and Actuator
470410-L	MLZ	Single Action Latching Pull Handle SS (Left)
470410-R	MLZ	Single Action Latching Pull Handle SS (Right)
470420	MLZ	Spare / Replacement Actuator
210005	MLZ	Rear Ball Handle for Sliding Bolt

ORIGINAL INSTRUCTIONS. To request this data sheet in other languages please contact info@idemsafety.com

IDEM SAFETY SWITCHES Ltd. (U.K.) 2,Ormside Close, Hindley Ind. Est., Hindley Green, Wigan, WN2 4HR Tel: +44 (0)1942 257070 email: sales@idemsafety.com
IDEM SAFETY SWITCHES USA, Inc. 2574 S.Beverley St., Suite 104, Boise, ID 83709 Tel: 510-445-0751 Fax: 866-431-7064 email: salesusa@idemsafety.com Web: www.idemsafety.com