This document was generated on 08/26/2021

PLEASE CHECK WWW.MOLEX.COM FOR LATEST PART INFORMATION

Part Number: 1300360005
Status: Active
Overview: Brad Mini-Change Connectors
Description: Mini-Change Side Mount, 5 Pole, 8 Port with Pass Thru

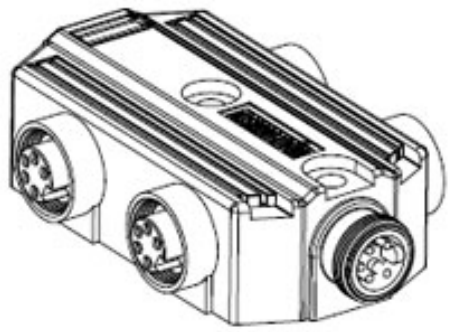

Series image - Reference only

Documents:
Drawing (PDF)
RoHS Certificate of Compliance (PDF)

Agency Certification

CSA	LR6837
UL	E152210

General

Product Family	Passive Distribution Boxes
Series	130036
IP Rating	IP67
NEMA Rating	NEMA 6
Overview	Brad Mini-Change Connectors
Product Name	Mini-Change
UPC	78678869022

Physical

Bus I/O	Mini-Change
Cable Connector Orientation	N/A
Cable Length	N/A
Home Run Cable Length	N/A
Home Run Connector	N/A
Home Run Interface	N/A
Keyway	Single
LED Indicator	No
Material - Cable Jacket	N/A
Material - Housing	PBT
Material - Metal	Copper Alloy
Material - Plating Mating	Gold
Net Weight	391.450/g
Orientation	Side Mount
Poles	5
Poles (wired)	4
Ports	4
Temperature Range - Operating	0°C to +60°C
Wiring Configuration	Passive Drop

Electrical

Current - Maximum per Contact	7.0A
Functional Wiring	PNP
Voltage - Maximum	120V AC/DC

Material Info

Engineering Number	DN4000

Reference - Drawing Numbers

Sales Drawing	SD-130036-001-001

EU ELV
Not Relevant

EU RoHS
Not Reviewed

China RoHS

REACH SVHC
Not Contained Per -ED/01/2018 (15 January 2018)

Halogen-Free Status
Not Low-Halogen

For more information, please visit Contact US

China ROHS	50 Image
ELV	Not Relevant
RoHS Phthalates	Not Contained

Search Parts in this Series
130036 Series

This document was generated on 08/26/2021

PLEASE CHECK WWW.MOLEX.COM FOR LATEST PART INFORMATION